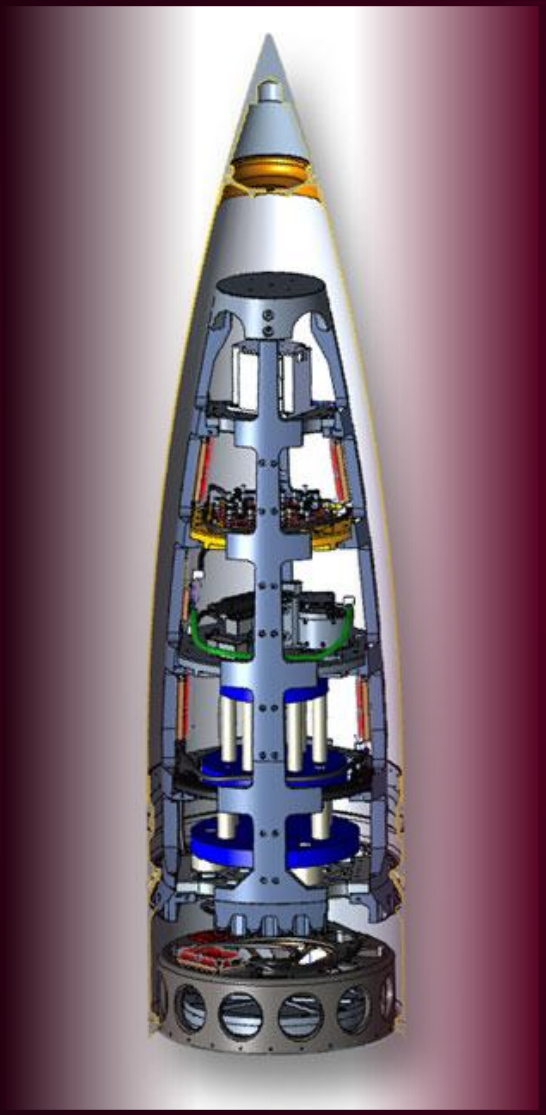

Dwight Look College of
ENGINEERING
TEXAS A&M UNIVERSITY

Team #28:
UL-SWaP DaQ For Rocket Flight
ECEN 404 Final Presentation

Andrew Bainbridge (ELEN)
John McWhirter (ECEN)
Robert Brown (ELEN)
Sponser: Sandia National Laboratory
TA: Souryendu Das

Project Summary

- **Problem:** The current data acquisition technology is designed to the specifications of individual sensors and therefore incompatible with other sensors. Ultimately, this leads to an inefficient use of payload, increased complexity, and power consumption.
- **Solution:** The Ultra Low Size, Weight, and Power Data Acquisition Unit (UL-SWaP DaQ) is intended to increase productivity and provide a standardized method for collecting data.

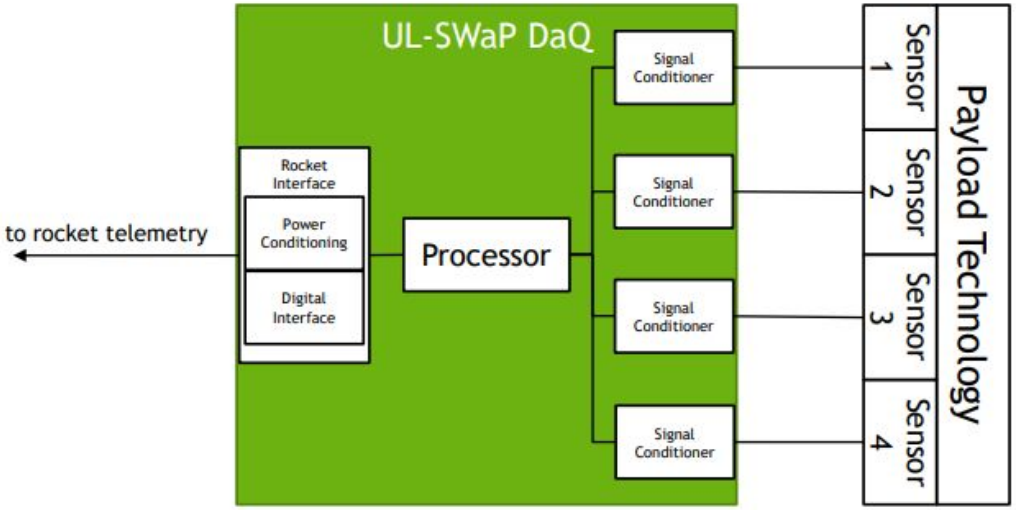

Integrated Project Diagram

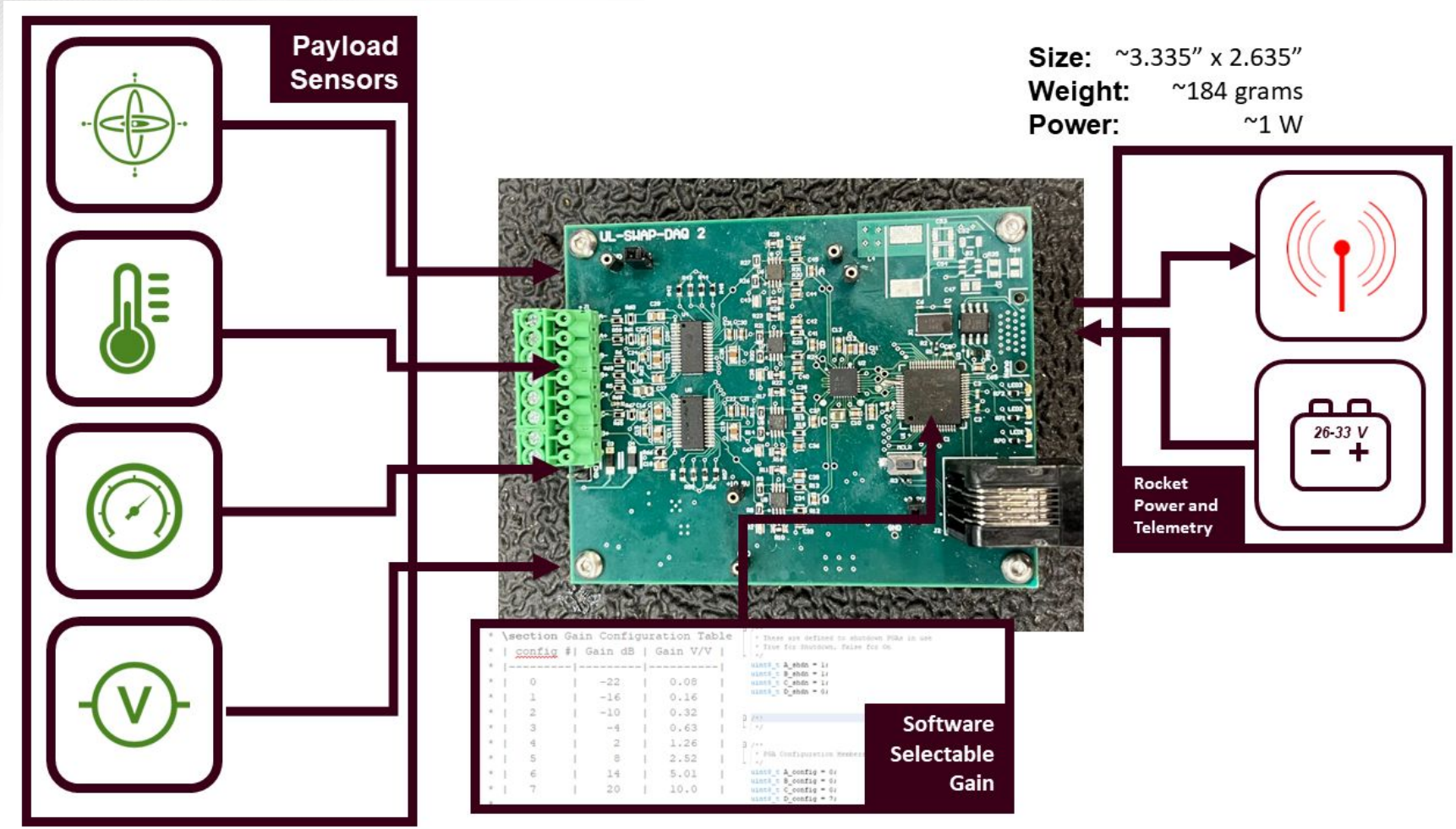

Integrated Project Diagram

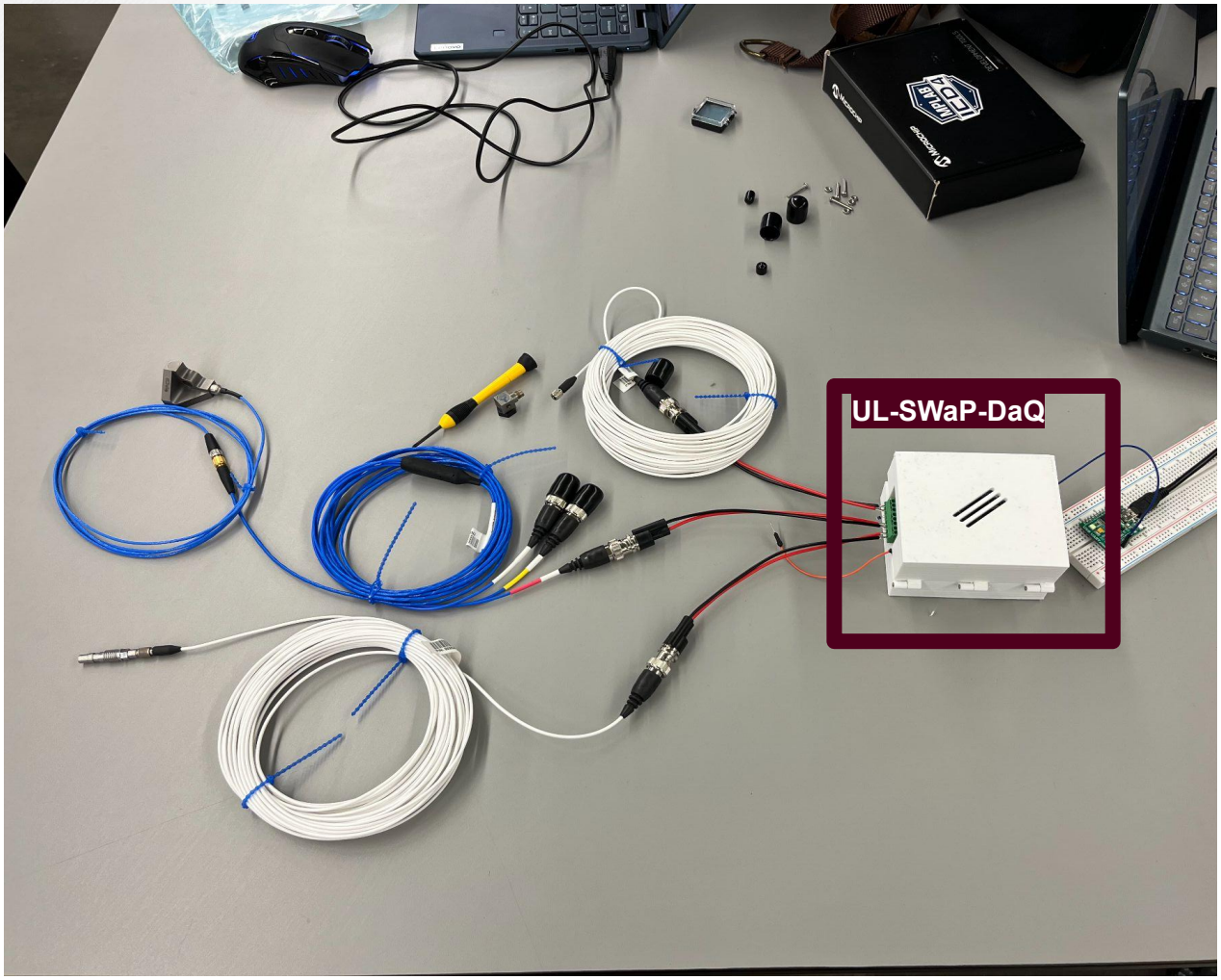

Signal Conditioning Subsystem

Andrew Bainbridge

Signal Conditioning

Sensors

The following sensors were provided for our project and served as the basis for the needed gain and selection of signal conditioning parts:

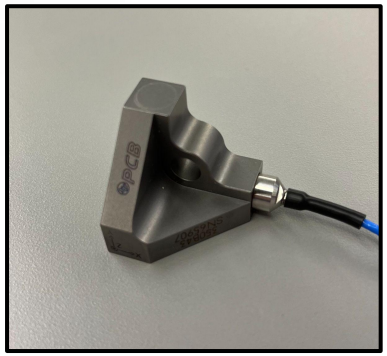

Shock Accelerometer - 350B43/NC:

Output Bias Voltage: 8-14 VDC
Amplitude: ~0 to +/-5V
Conversion: 0.543mV/g
Min/Max Gain*: 0.63 to 20V

Pressure Sensor - 113B28:

Output Bias Voltage: 8-15 VDC
Amplitude ~0 to +/-10V
Conversion: 100.6mV/g
Min/Max Gain*: 0.32 to 10V

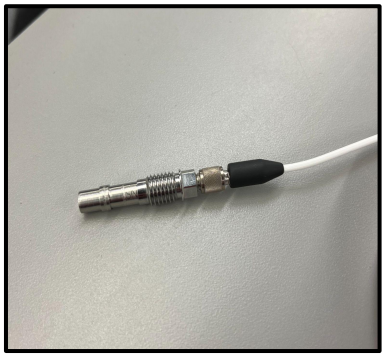

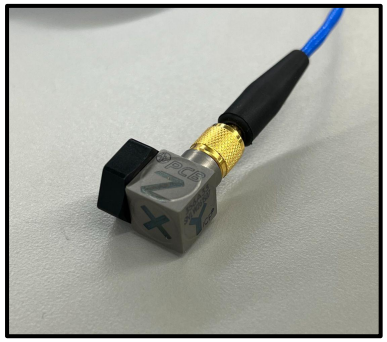

Sheer Accelerometer - 356A33:

Output Bias Voltage: 7-12 VDC
Amplitude ~0 to +/-5V
Conversion: 9.84mV/g
Min/Max Gain*: 0.63 to 20V

RTD Sensor - NB-PTCO-029:

Input Bias Current: 0.5mA
Amplitude ~0 to +/-0.66
Conversion 15.6mV/℉
Min/Max Gain*: 5.01V to 20V

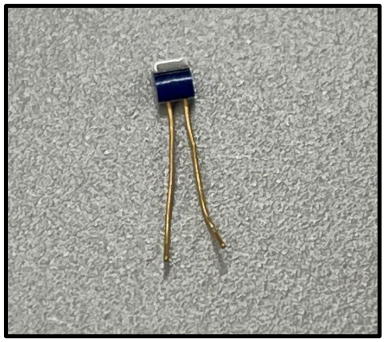

*indicates recommended range

Signal Conditioning

Design

- PGAs - ***THS7002***
  - SIngle ended output
  - Software programmable gain (0.08 to 10)
  - Need to produce a +/- 4V Signal
  - Pre-Amp allows for hardware compatibility

- Differential Amplifiers - ***LTC6362HMS8***
  - Low power ADC Driver
  - Single ended input, differential output
  - Level up PGA signal between 0V and 4.096V

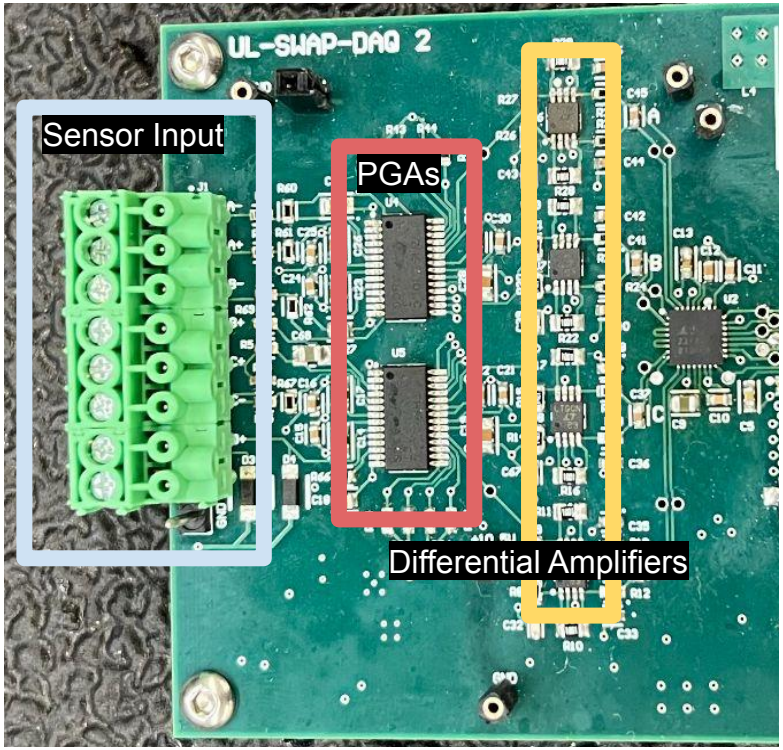

Signal Conditioning

Andrew Bainbridge

Signal Conditioning Tests/Validation:

Input Voltage Sensor	Gain	Expected Output	Actual Output (pk-pk)	% Error
1V	0.16	0.16 V	0.155 V	3%
1V	0.32	0.32 V	0.321 V	~0%
1V	1.26	1.26 V	1.262 V	~0%
200mV	10	2V	2.01 V	~0.50%
Shock Accelerometer	0.08	43.98mV	48mV	20%
Shear Accelerometer	0.32	52.15 mV	50 mV	4%
Pressure (10psi)	1.26	1.47 V	1.38 V	6%
RTD	5.01	0.548 V	1.62 V	19%
Voltage Output (400mV)	10	4 V	4.04 V	1%

Processor and Interface Subsystem

John McWhirter

Processor and Interface

Requirements

- Analog-To-Digital Converter - ***LTC2373***
  - Low Power
  - 10~100 kHz sampling rate per input signal
- Processor - ***PIC32MX470***
  - Low Power
  - 2+ Communication Capabilities
- Interface - ***ADN4661BRZ***
  - Low-Voltage Differential Signal (LVDS) output

∗ Housing
  - 3D-printed Case

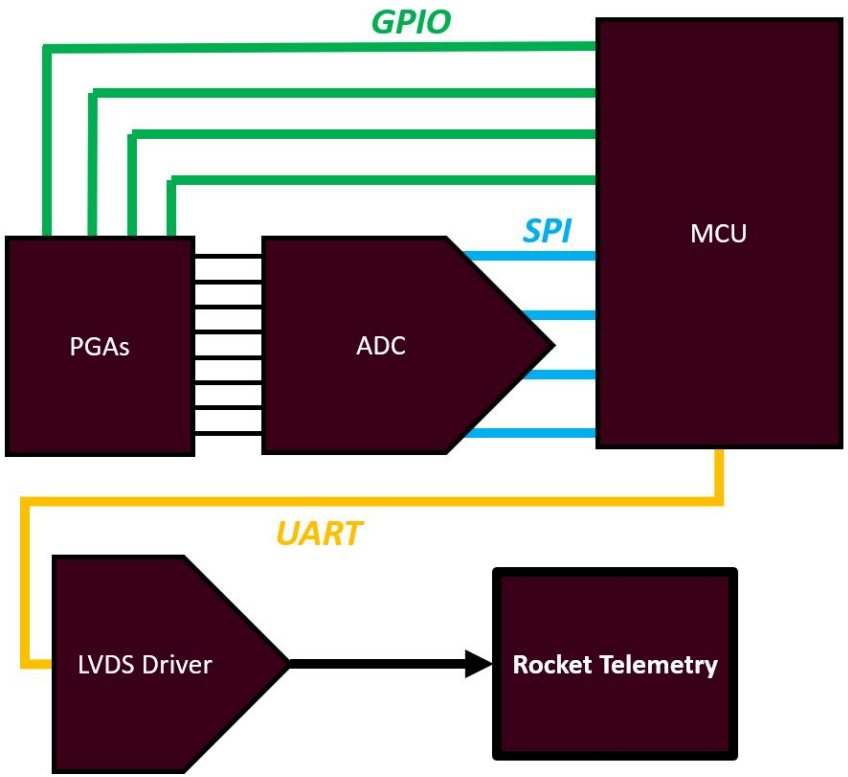

Processor and Interface

State Machine Flow Chart

There are 4 Channels (A, B, C, D). The State Machine starts with A writes the configuration (A) and reads the previous conversion (D).

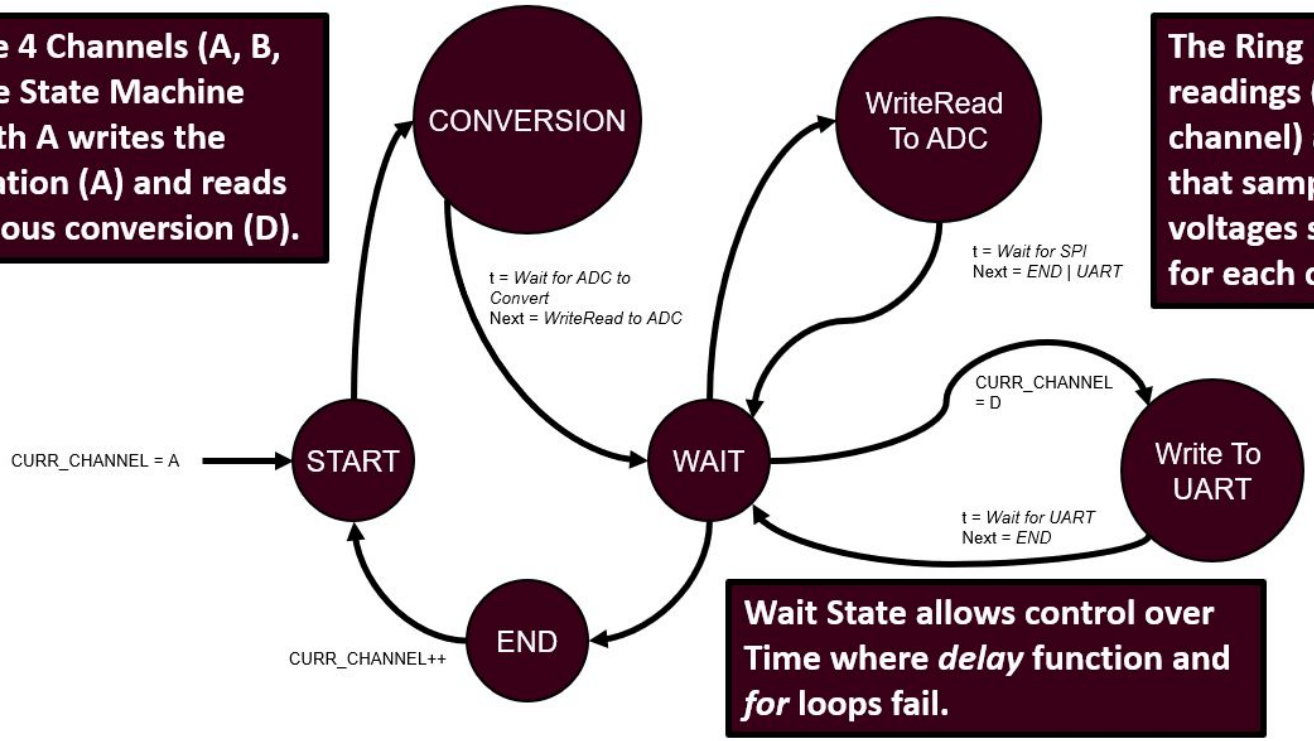

The Ring Buffer can fit 4 readings (one for each channel) and then will write that sample to UART as voltages separated by commas for each channel, respectively.

Wait State allows control over Time where *delay* function and *for* loops fail.

Processor and Interface

Subsystem Results

Item	Theory	Target	Stretch	Measured
Sampling Frequency	1 Msps	10 kHz	100 kHz	160 kHz
Error	± 3%	3%	1%	~1.0254%

Item	Met
Low Voltage Differential Signal Output	Yes
Software Selectable Gain	Yes

Processor and Interface

Subsystem Results: Square Wave Sample Capture

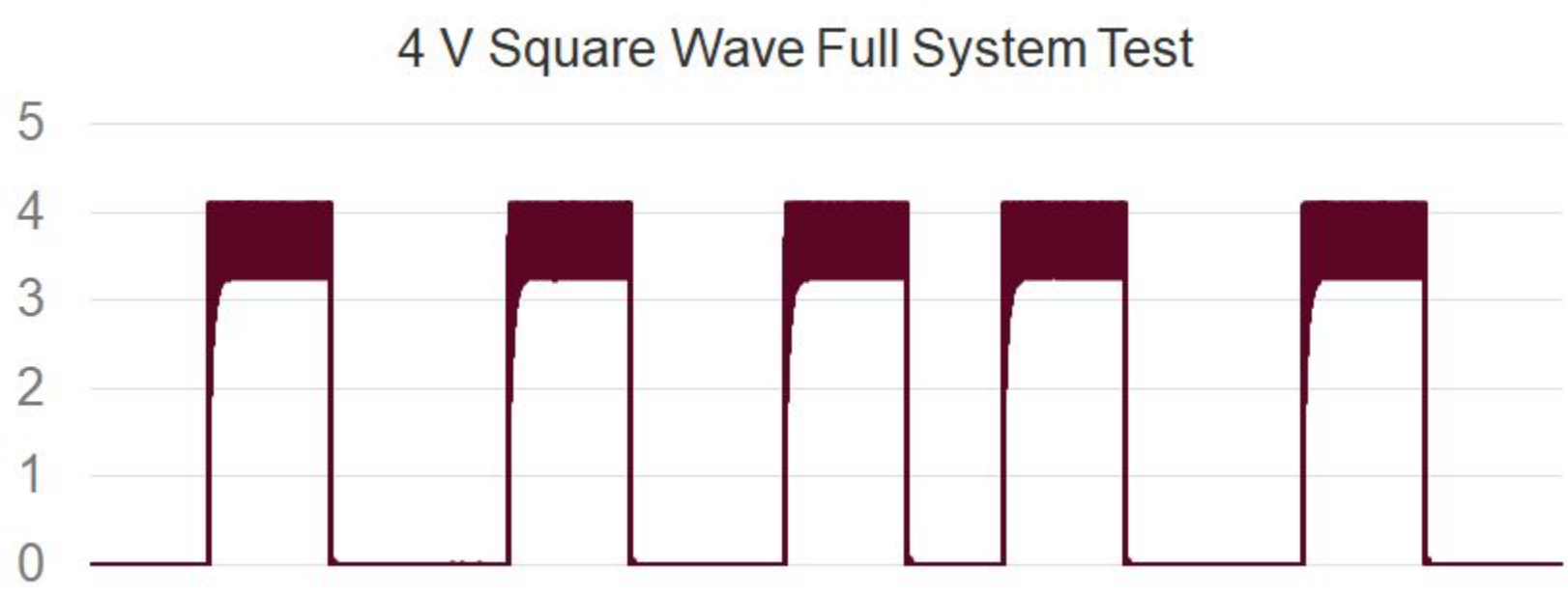

Power Subsystem

Robert Brown

Power

Robert Brown

- Payload Supply: 25-32V DC Battery
- Load Requirements for Power Subsystem: ~1.33 Watts across all channels

Part	Voltage (V)	Current (mA)	Power (W)
PIC32	3.3	~100	.33
ADC	5	~11	0.55
PGA	+/-10	~40	0.4
Diff. Amp	5	~4	0.02
LVDS Driver	3.3	~10	0.033

Power

Robert Brown

Design Plan:

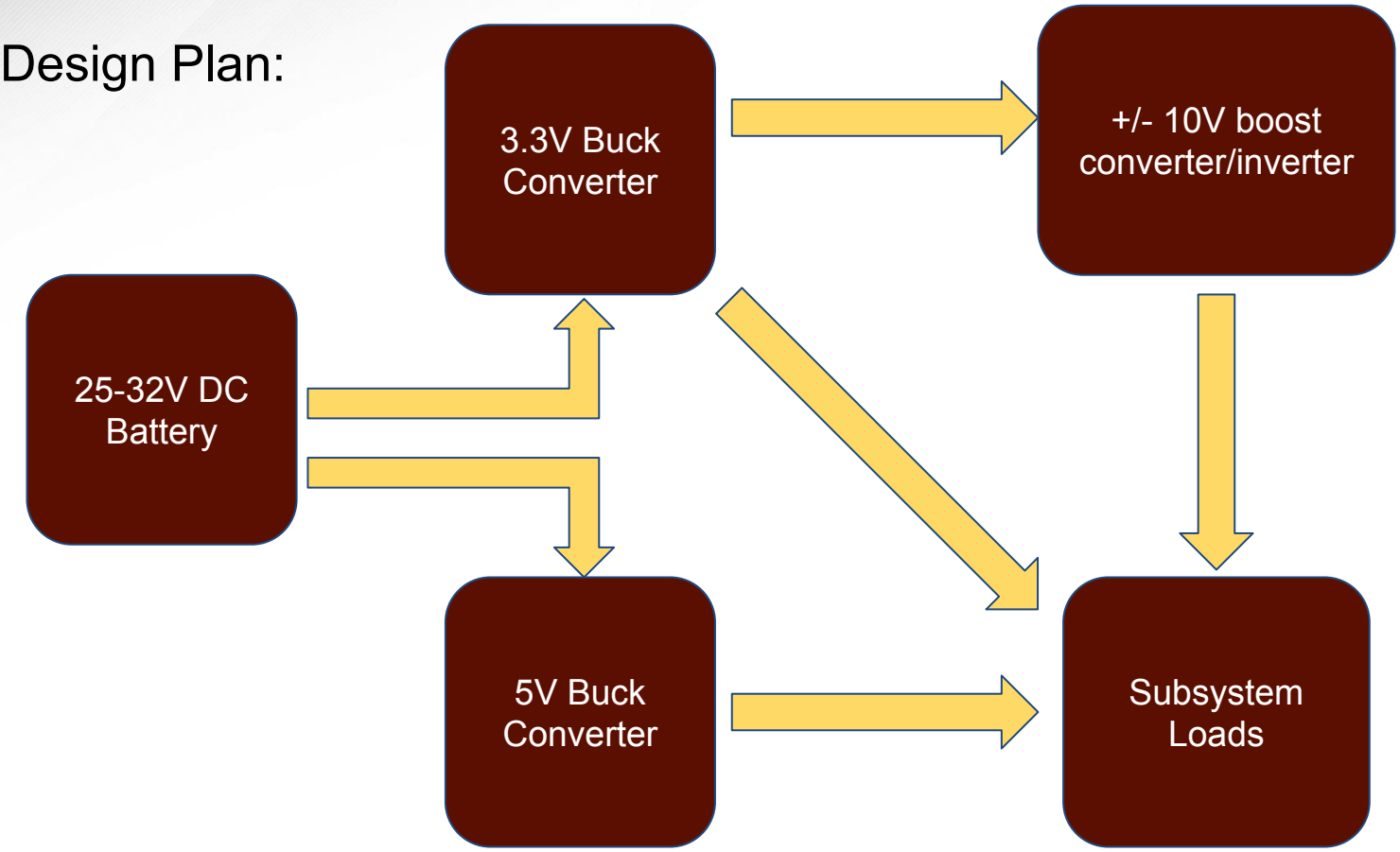

Power

Robert Brown

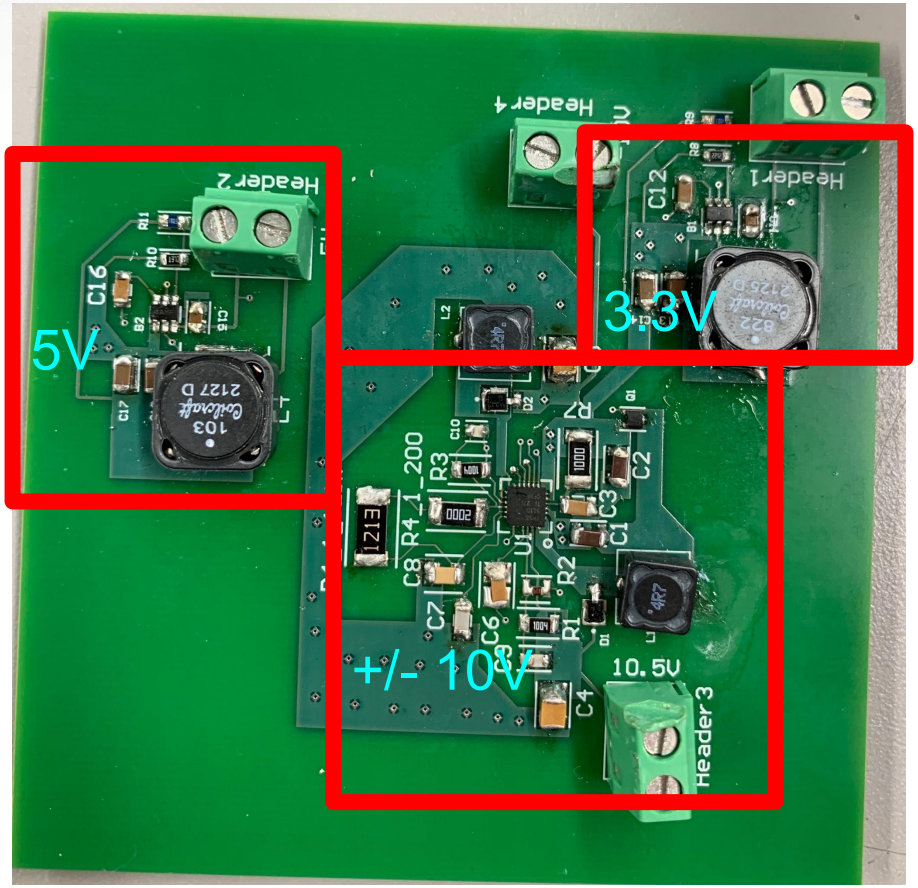

Power

Robert Brown

- Power consumption to produce power rails: ~1.11 Watts
- Power consumed by other subsystems: ~1.33Watts
- Max power required by DAQ: ~2.44 Watts, less than 3 Watt goal

Power Rail Voltage (V)	Power (W)
3.3	0.26
5	0.29
10.5	0.28
-10	0.28

Power

Robert Brown

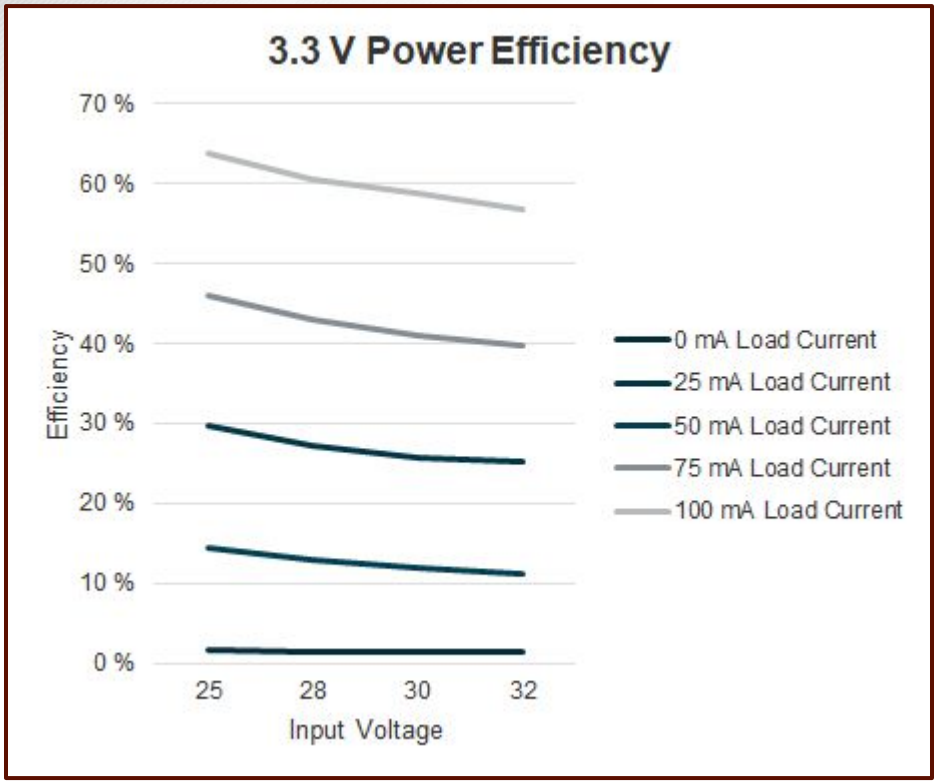

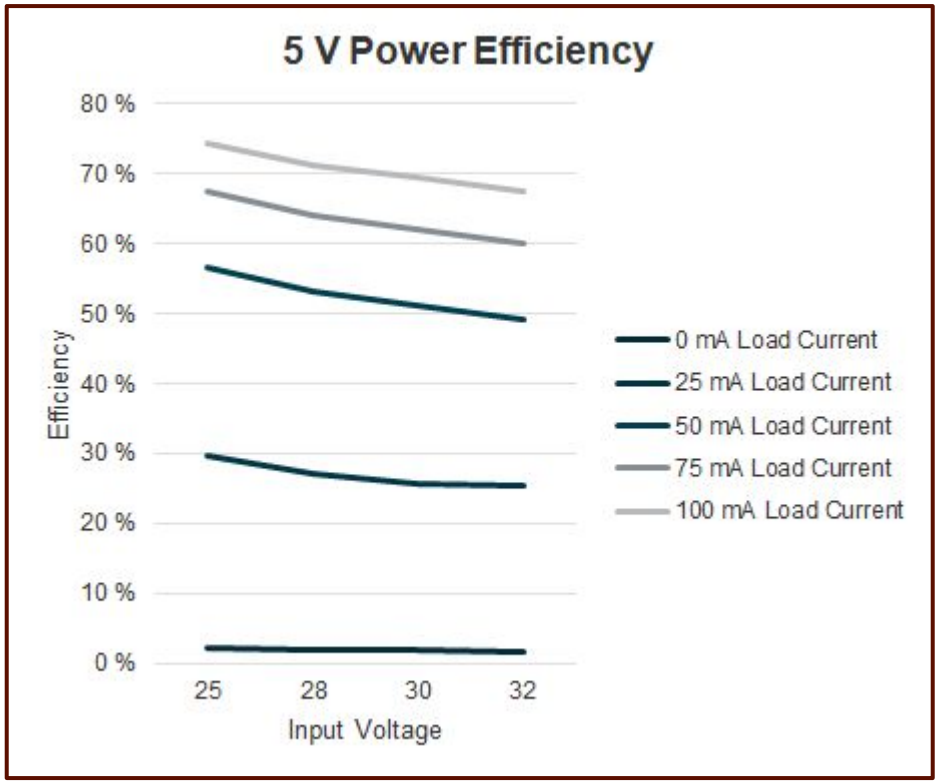

Power

Robert Brown

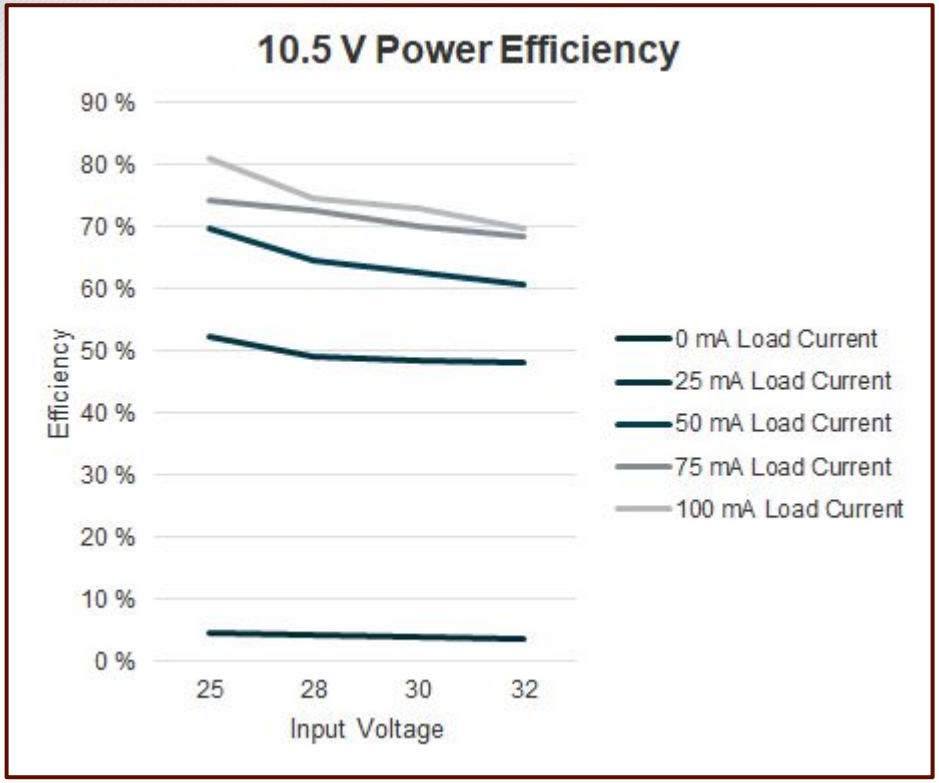

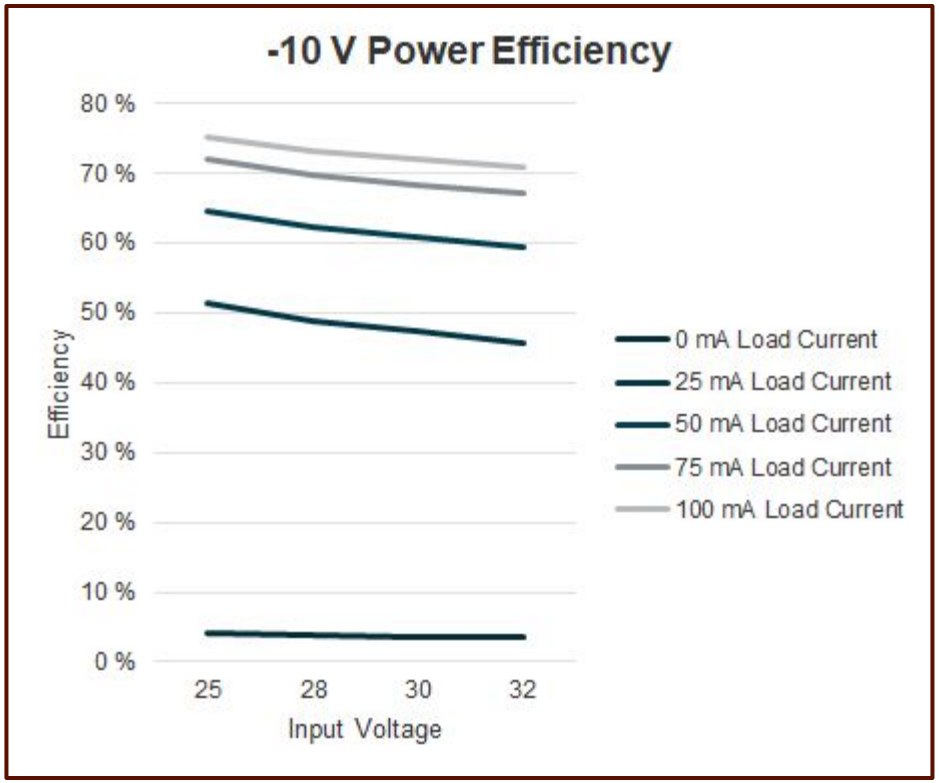

Challenges and Solutions

Challenges:

Differential Amplifiers of 2nd iteration were not leveling up the output signal properly within 0V to 4.096V range.

My method for programming the firmware using delays was not allowing the MCU and ADC to communicate properly

The -10V power rail was not functioning properly. As soon as load reached 25mA, voltage would drop to -17V.

Solutions:

Soldered on resistor in parallel with 5 volts applied to common-mode output voltage pin to level up signal.

Moved to coding with Harmony v3 and wrote a Finite State Machine using a switch-case block allowing for more computations between cycles.

An extra 50k Ohm resistor was added to the feedback network to reduce feedback noise.

Integrated System Results

System Operation:

- All voltage rails have been tested and validated with the system for an appropriate period of time

- Tested operation of full system with one sensor connected:
  - ADC received adjusted sensor input
  - LVDS signal produced and correct
  - Software Selectable Gain is achieved

- All physical requirements met:
  - Mass is < 184 grams (goal was < 250 grams)
  - Volume is < 27 cubic inches

3rd Design Concept

Improvements:

- More Compact Design
- Scalable Modules
- < 8 Cubic Inches
- Smaller Components (0402)

Modular Board

(Bottom)

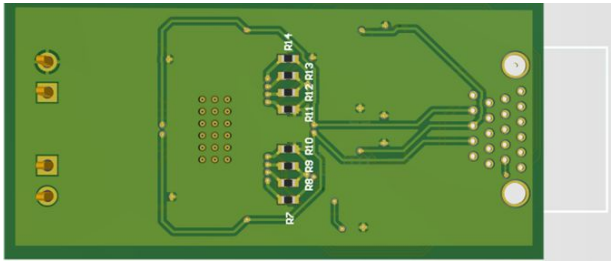

(Top)

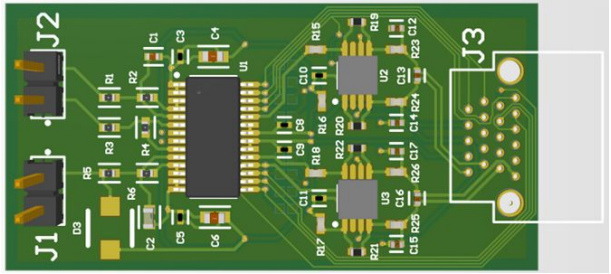

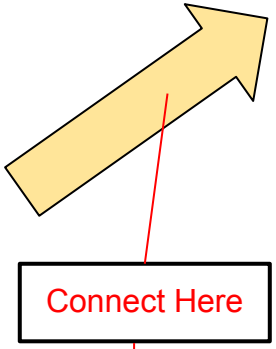

Main Board

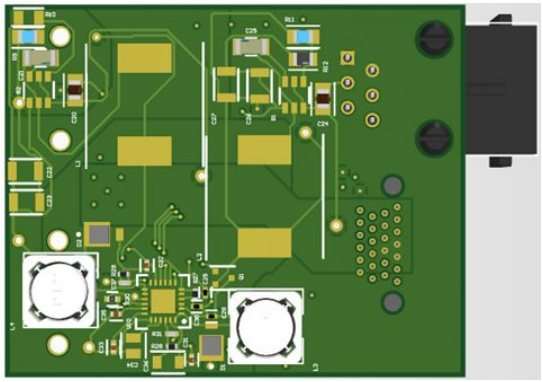

(Bottom)

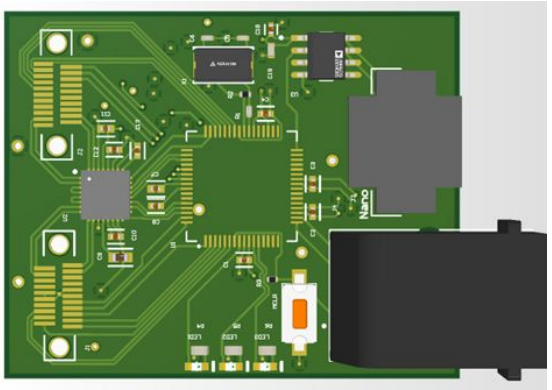

(Top)

Conclusions

- Ultra Low Size, Weight, and Power Data Acquisitions Unit is fully functional and operates within necessary requirements.
- Validation of each subsystem produced
- Made updates from first to third iteration:
  - Went from integrated design to scalable modules for variability in the type and number of sensors used
  - Decreased overall size from 48 in^3 to less than 8 in^3
  - Used more reliable and compact components (Nano-D connectors, 0402 components, etc.)

Dwight Look College of
ENGINEERING
TEXAS A&M UNIVERSITY

Thank you for your attention!
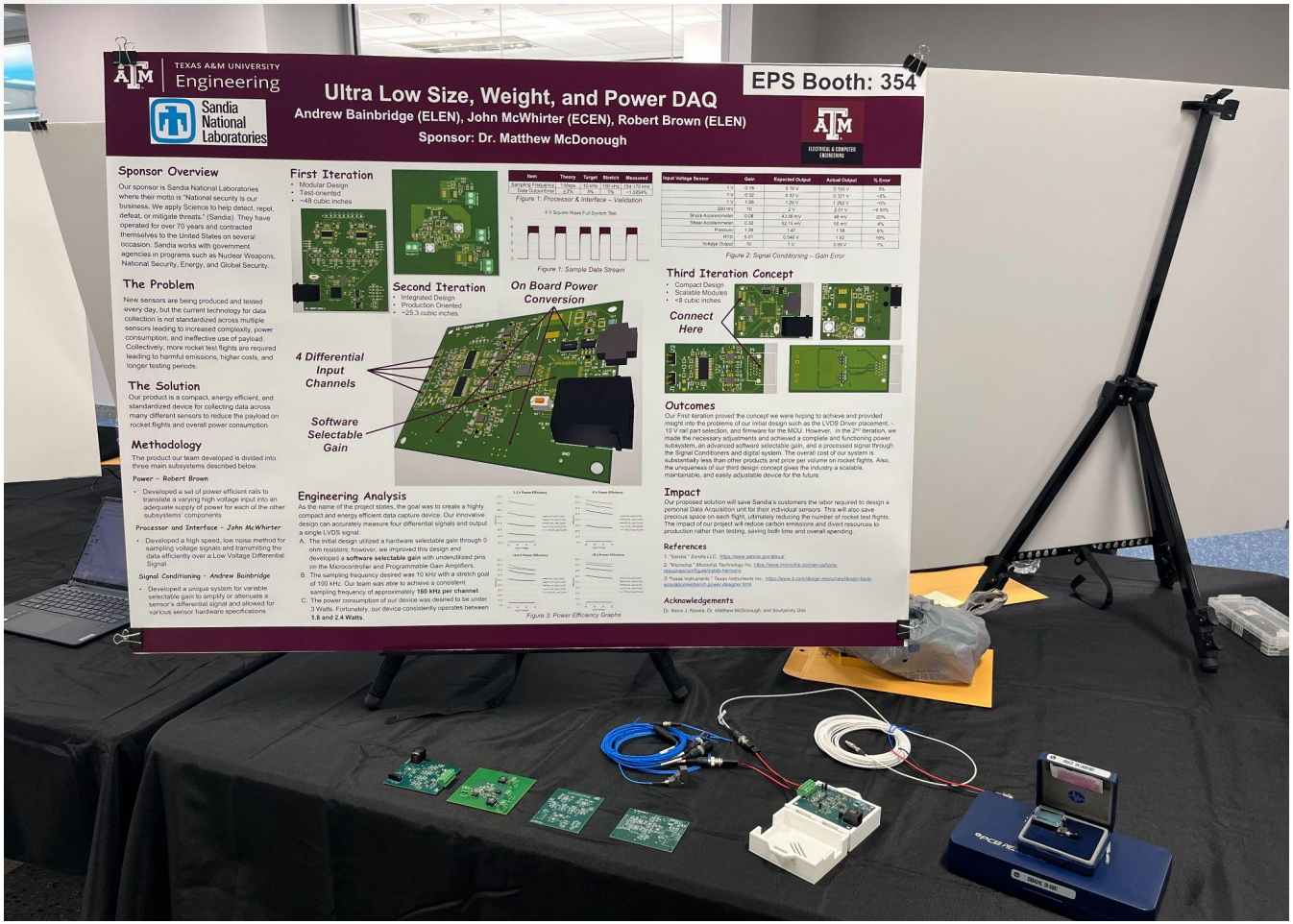
Questions?