Physics 5C Discussion (Week 6)

Department of Physics and Astronomy, UCLA

Problem 1 The human body is a huge conductor with finite resistance. Across Jinyan's two dry hands, the resistance is around $R = 100\,\mathrm{k\Omega}$, but an electric current as low as $90\,\mathrm{mA}$ can cause ventricular fibrillation.

Part (a) The voltage supplied by a standard U.S. power outlet is $120\,\mathrm{V}$. For doing a physics demo, will it be too risky for Jinyan to stick his hands into the power outlet? [1]

Part (b) It takes around $20\,\mathrm{kJ}$ of energy to cook an egg. The power (energy per second) delivered by a current through a conductor is calculated via

$$P = IV\,.$$

Hypothetically, if Jinyan sticks his hands into the standard power outlet for 10 seconds, will he be cooked? [2]

The followings are standard circuit problems. I will show you the full process to solve Problem 2 during discussion, and Problems 3 and 4 are left to you for practice. For these problems, assume that the resistances in the battery and wires are negligible.

Problem 2 Jinyan has built a circuit as shown, but he has trouble analyzing the circuit. [**I will demonstrate how to solve this circuit on the board during discussion.**]

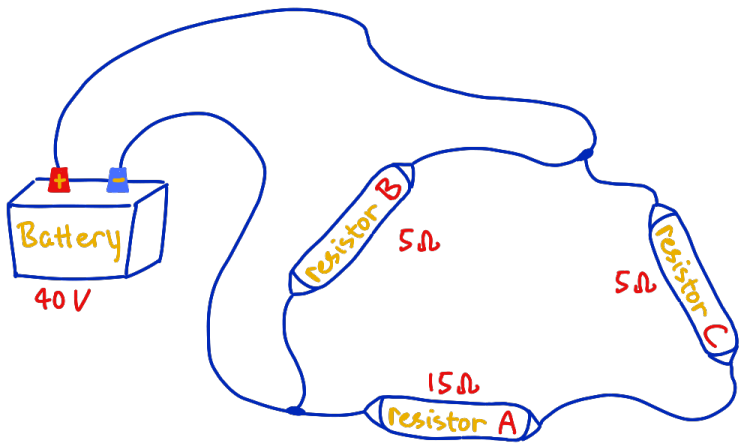

Part (a) Based on the wiring of the components, draw the equivalent circuit diagram.
Part (b) Find the voltage drop across resistor A.
Part (c) How should I use a voltmeter to measure the voltage across resistor A?

---

[1] Don't be crazy, please don't do it :(
[2] Again, please don't do it.

Problem 3 Jinyan's evil labmate Michael sneakily changes one of the wires.

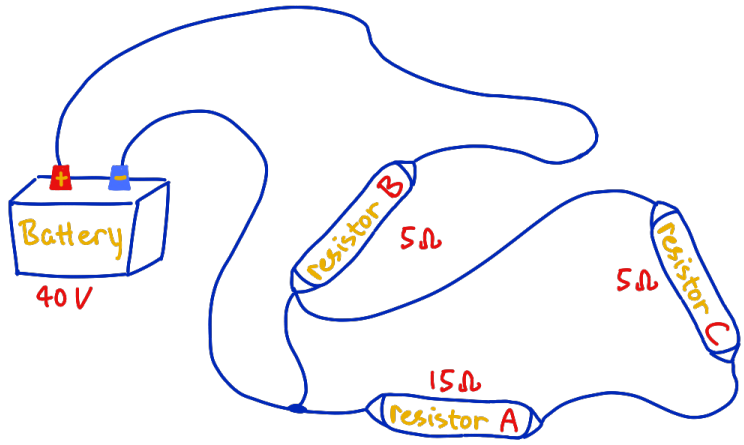

Part (a) Based on the wiring of the components, draw the equivalent circuit diagram.
Part (b) Find the current through resistor A and resistor B.[3]
Part (c) How should I use an ammeter to measure the current through resistor A?

Problem 4 Jinyan finds something weird going on and rewires the components, but he gets confused again. Please help him out!

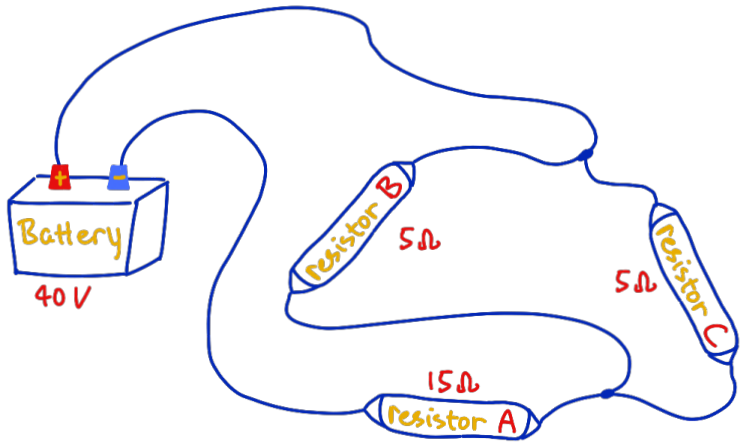

Part (a) Based on the wiring of the components, draw the equivalent circuit diagram.
Part (b) Find the total equivalent resistance of the circuit.
Part (c) Find the current through the battery.
Part (d) Find the current through resistor A.
Part (e) Find the voltage drop across resistor A.
Part (f) Find the voltage drop across resistor B.
Part (g) Find the current through resistor B.
Part (h) Find the power dissipated by resistor B.
Part (i) What will happen if we change all the resistors to capacitors?

[3]Other than the quantities listed on the figure, you should NOT reuse anything you computed in Problem 2. These are completely different circuits. If you draw out the correct circuit diagram and think about it carefully, you will find Problem 3 is very straightforward and easy, and you should be able to answer all parts of Problem 3 in 1 minute.

Problem 1

In order to make electrons flow in a conductor (such as your TA's body) to create a current, we need to apply an electric potential difference across the two ends of the conductor. Let us call the potential difference across the two ends V, and the resulting current I. Then we have the famous Ohm's Law, [4]

$$V = RI\,,$$

where R is the resistance of the conductor. As we discussed last week, R represents how difficult it is for electrons to flow in a conductor.

Part (a) We use Ohm's law,

$$V = IR\,,$$

so the current through Jinyan is

$$I = \frac{V}{R} = \frac{120\,\mathrm{V}}{100000\,\Omega} = 0.0012\,\mathrm{A} = 1.2\,\mathrm{mA}\,.$$

This is much smaller than 90 mA, the approximate threshold for ventricular fibrillation. According to this very rough dry-hands model, the current is below that dangerous threshold. However, it is still a terrible idea in real life. Human-body resistance can change a lot, especially if the skin is wet or damaged (in which case the resistance might be lowered by more than a factor of 10). I am enjoying my life, and I don't want to sacrifice myself for science. Theory is theory, but realistically it is still too risky to do as a demo.

Part (b) The power delivered is

$$P = IV = (0.0012\,\mathrm{A})(120\,\mathrm{V}) = 0.144\,\mathrm{W}\,.$$

Recall that 1 Watt means 1 Joule per second, so in 10 seconds the delivered energy is

$$E = Pt = (0.144\,\mathrm{J/s})(10\,\mathrm{s}) = 1.44\,\mathrm{J}\,.$$

But it takes around 20000 J to cook an egg, and 1.44 J is nowhere close to that. Therefore, in this simplified model, Jinyan will definitely not be cooked.

[4] You can think of this in this way: Imagine a cylindrical conductor. The top circular disk of it is positively charged and the bottom disk is negatively charged. Then electrons in the cylinder will want to move upwards towards the top disk due to the potential difference, and that creates a current.

Problem 2

Part (a) To analyze the circuit, first identify the two battery terminals. The positive battery terminal is connected to the top node, and the negative battery terminal is connected to the lower-left node. Between these two nodes, resistor B forms one branch, while resistors C and A together form another branch. Therefore, resistor B is in parallel with the series combination of C and A.

The equivalent circuit is

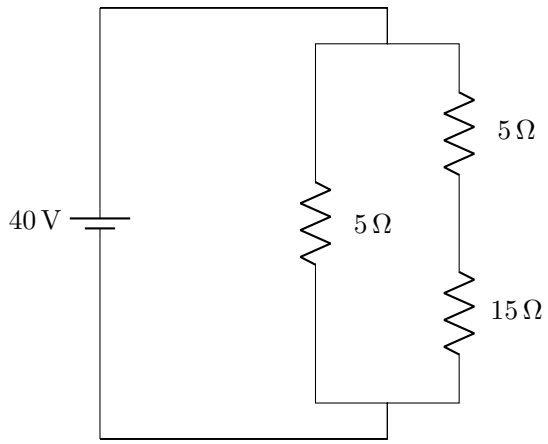

Part (b) In the branch that contains resistors C and A, the two resistors are in series, so their equivalent resistance is

$$R_{CA} = R_C + R_A = 5\,\Omega + 15\,\Omega = 20\,\Omega\,.$$

Since this whole branch is directly connected across the 40 V battery (and it is also in parallel with the 5 Ω resistor B), the total voltage across the branch is 40 V. Therefore, the current in this branch is

$$I_{CA} = \frac{40\,\mathrm{V}}{20\,\Omega} = 2\,\mathrm{A}\,.$$

Because resistors C and A are in series, they carry the same current. So resistor A carries a current of 2 A, and thus the voltage drop across resistor A is

$$V_A = I_A R_A = (2\,\mathrm{A})(15\,\Omega) = 30\,\mathrm{V}\,.$$

Part (c) A voltmeter should always be connected in parallel with the component whose voltage you want to measure. So you should place one probe on each end of resistor A to get the voltage drop across A. If you want a positive reading on the voltmeter, make sure to place the probes so that they follow the direction of the current in the circuit.

Problem 3

In this case, resistor B is the only resistor that is actually connected across the battery. Here is the reasoning: track how the current goes in the circuit. It first comes out of the positive end of the battery and passes through resistor B. Then it sees two paths: one goes directly back to the battery, while the other passes through resistors C and A and then back to the battery. It must choose the one that has no resistance because it is smart.[5] Thus there will be no current going through resistors C and A. The pair C and A is disconnected from the battery and forms an isolated subcircuit. In this case, we say the path connecting B to the negative end of the battery shorts the components A and C.

Part (a) From the argument above, A and C are shorted, so the equivalent circuit contains only resistor B. I can safely neglect A and C because there is no current going through them. Resistor B is the only component powered by the battery.

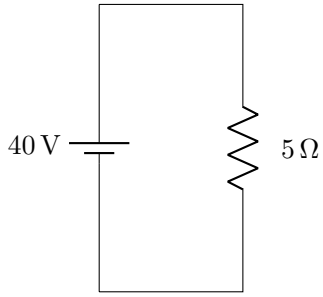

Part (b) Since resistor B is directly across the 40 V battery,

$$I_B = \frac{V}{R_B} = \frac{40\,\mathrm{V}}{5\,\Omega} = 8\,\mathrm{A}\,.$$

As argued at the beginning of this problem, there is no current flowing through resistors A and C. Therefore, $I_A = 0\,\mathrm{A}$.

Part (c) An ammeter should be connected in series with the component whose current you want to measure. So you should break the branch containing resistor A and insert the ammeter into that branch. In this problem it should read 0 A because there is no current through resistor A.

[5] Again, you can think of this as traffic on a highway - You see one highway has no traffic at all, and the other one has. If both highways lead to the same destination, you will for sure choose the one that has no traffic. However, if both of them have some traffic, then people will make their decisions based on the relative amount of traffic that they see on the two highways.

Problem 4

In this configuration, nothing is shorted out. You can track how the current goes in the circuit from the positive terminal all the way to the negative terminal of the battery: coming out of the battery, the current first sees a junction splitting into two paths - one going through resistor B and the other going through resistor C - and then the two paths recombine. Thus resistors B and C are in parallel. Next, the current continues to pass through resistor A and back to the battery, so resistor A is in series with the parallel combination of B and C.

Part (a) Here I draw the equivalent circuit based on my argument above.

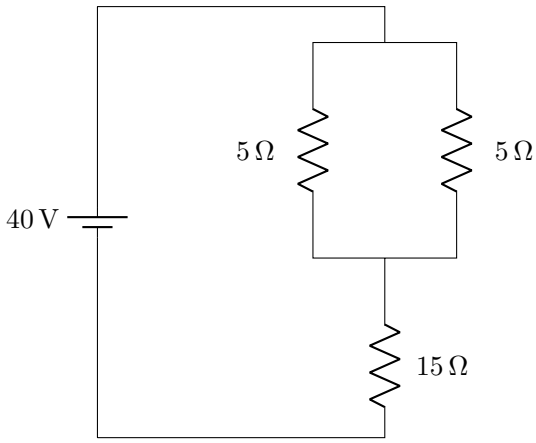

That is, R_A is in series with $(R_B \parallel R_C)$.

Part (b) Since resistors B and C are in parallel, their equivalent resistance is

$$\frac{1}{R_{BC}} = \frac{1}{R_B} + \frac{1}{R_C} = \frac{1}{5} + \frac{1}{5} = \frac{2}{5},$$

from which we see that $R_{BC} = 2.5\,\Omega$. Now this parallel combination is in series with resistor A, so the total equivalent resistance is

$$R_{\text{eq}} = R_A + R_{BC} = 15\,\Omega + 2.5\,\Omega = 17.5\,\Omega.$$

Part (c) Using the total equivalent resistance, we can find the current through the battery, using Ohm's Law,

$$I_{\text{battery}} = \frac{V_{\text{battery}}}{R_{\text{eq}}} = \frac{40\,\text{V}}{17.5\,\Omega} = \frac{16}{7}\,\text{A} = 2.29\,\text{A}.$$

Part (d) Because resistor A is in series with the battery and the parallel branch, it carries the same current as the battery. Therefore,

$$I_A = I_{\text{battery}} = \frac{16}{7}\,\text{A} = 2.29\,\text{A}.$$

Part (e) The voltage drop across resistor A is then calculated from Ohm's Law,

$$V_A = I_A R_A = \left(\frac{16}{7}\,\text{A}\right)(15\,\Omega) = \frac{240}{7}\,\text{V} = 34.3\,\text{V}.$$

Part (f) Other than the voltage drop across resistor A, the remaining voltage drop must be across the parallel branch containing B and C, so

$$V_{BC} = V_{\text{battery}} - V_A = 5.71\,\text{V}\,.$$

Since B and C are in parallel, they have the same voltage drop. That is

$$V_B = V_C = V_{BC} = 5.71\,\text{V}\,.$$

Part (g) Therefore the current through resistor B is

$$I_B = \frac{V_B}{R_B} = \frac{(40/7)\,\text{V}}{5\,\Omega} = \frac{8}{7}\,\text{A} = 1.14\,\text{A}\,.$$

Part (h) The power dissipated by resistor B is computed using what we have learned from Problem 1,

$$P_B = I_B V_B = \left(\frac{8}{7}\,\text{A}\right)\left(\frac{40}{7}\,\text{V}\right) = \frac{320}{49}\,\text{W} = 6.53\,\text{W}\,.$$

Equivalently, you can compute

$$P_B = I_B^2 R_B = \left(\frac{8}{7}\,\text{A}\right)^2 (5\,\Omega) = \frac{320}{49}\,\text{W} = 6.53\,\text{W}\,.$$

Part (i) If we change all the resistors to capacitors, then the physics changes a lot. For resistors, a battery can drive a steady current forever, and the resistors dissipate energy as heat. For capacitors, when you connect them to a DC battery, charges only flow for a while during the charging process. After the capacitors are fully charged, the current stops. So a capacitor circuit stores energy, while a resistor circuit keeps dissipating energy.

There is another important difference: the combination rules for resistors and capacitors are opposite to each other.[6] For resistors, series adds directly while parallel uses reciprocals. For capacitors, parallel adds directly while series uses reciprocals. In this Problem 4 circuit, the wiring is still C_A in series with $(C_B \parallel C_C)$. Therefore, the equivalent capacitance for the parallel part is

$$C_{BC} = C_B + C_C\,.$$

If we interpret the labels on the diagram as capacitor values instead, then

$$C_A = 15\,\text{F}\,, \qquad C_B = 5\,\text{F}\,, \qquad C_C = 5\,\text{F}\,,$$

so we see that

$$C_{BC} = (5+5)\,\text{F} = 10\,\text{F}\,.$$

Now C_A is in series with C_{BC}, so

$$\frac{1}{C_{\text{eq}}} = \frac{1}{C_A} + \frac{1}{C_{BC}} = \frac{1}{15} + \frac{1}{10} = \frac{1}{6}\,,$$

[6] One can prove this rigorously by talking about Kirchhoff's Circuit Laws.

hence the total equivalent capacitance is

$$C_{\text{eq}} = 6\,\text{F}\,.$$

So compared with the resistor case, the same wiring gives a completely different equivalent quantity because capacitors obey different rules.

Also, after all the capacitors are fully charged by the 40 V battery, the steady-state current in the circuit becomes zero, so there is no current flowing in the circuit. It is very difficult to analyze the circuit in the non-steady-state charging process, and it usually involves exponential functions of time, similar to the ones you see in your lab. If you are interested in reading more about this, try Googling "RC circuit" and "charging and discharging capacitors."

Miku Expo @ LA Peacock Center in April 2026.