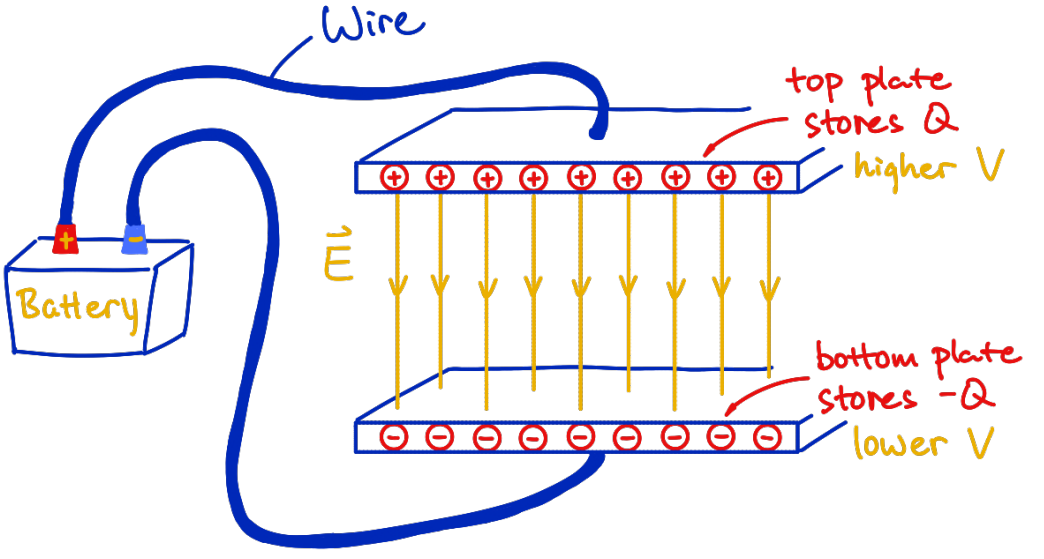
Wire
top plate
stores Q
higher V
$\vec{E}$
Battery
bottom plate
stores -Q
lower V