Physics 5C Midterm 2 Review Session

Department of Physics and Astronomy, UCLA

Problem 1: There is a circuit on the lab table.

A battery of emf ε is connected in series with a resistor $R_1 = R$. After that resistor, the circuit splits into two parallel branches. One branch contains a resistor of resistance $R_2 = 2R$. The other branch contains another resistor $R_3 = 3R$. The two branches then rejoin and return to the battery. In this problem, assume that the wires are ideal and have no resistance, and solve the problem symbolically.

Part (a) Draw an equivalent circuit diagram.

Part (b) Find the equivalent resistance in this circuit.

Part (c) Find the current going through the battery, and the current going through R_1.

Part (d) Find the voltage drop across R_1, and the voltage drops across R_2 and R_3.

Part (e) Find the current I_2 going through R_2, and I_3 going through R_3.

Part (f) Find the energy dissipated by each of the resistors in 10 seconds.

Part (g) Now if we replace R_3 with another resistor R_4 that has the same resistance, is made out of the same material (and thus has the same resistivity), but is twice as long as R_3, find the cross-sectional area of R_4 compared to that of R_3. Label the cross-sectional area of R_3 as A_3.

Problem 2 Evil Jinyan sneaked into the lab and replaced R_1 in the circuit with a capacitor C_1 that has a capacitance C. The capacitor is initially uncharged.

Part (a) Draw an equivalent circuit diagram immediately after the circuit is completed.

Part (b) Find the current going through R_2 and R_3 right after the circuit is completed.

Part (c) Find the current going through R_2 and R_3 a decade after the circuit is completed. By that time, the capacitor C_1 should have been fully charged.

Part (d) Find the voltage across the capacitor a decade after the circuit is completed.

Part (e) Find the total energy stored in C_1 when the capacitor is uncharged.

Part (f) Find the total energy stored in C_1 when the capacitor is fully charged.

Part (g) Jinyan finds that C_1 is actually a parallel-plate capacitor. Help him compute the amount of charge stored on one of the plates of C_1 when C_1 is fully charged.

Part (h) If Jinyan inserts some mysterious material (with $\kappa > 1$) in between the two plates of C_1, what will happen to the amount of charge stored on the plates and the amount of energy stored in the capacitor when it is fully charged?

Part (i) So far we have assumed that the battery has zero *internal* resistance. Now assume the same setup, but the battery has internal resistance r. Find the current going through the battery right after the circuit is completed.

Part (j) Assume the battery has internal resistance r. Find the voltage across the battery terminals right after the circuit is completed.

Part (k) Jinyan replaces all resistors in the circuit with capacitors: R_1 is replaced by $C_1 = C$, R_2 is replaced by $C_2 = 2C$, and R_3 is replaced by $C_3 = 3C$. Find the equivalent capacitance of all the capacitors combined.

Problem 1

The first thing we should do in this problem is to identify the structure of the circuit. Current from the battery must first pass through R_1, then it reaches a junction and splits into two branches, one through R_2 and the other through R_3, and finally the two branches recombine and go back to the battery. Therefore the circuit is R_1 in series with $(R_2 \parallel R_3)$.

Part (a) Based on the argument above, the equivalent circuit diagram is

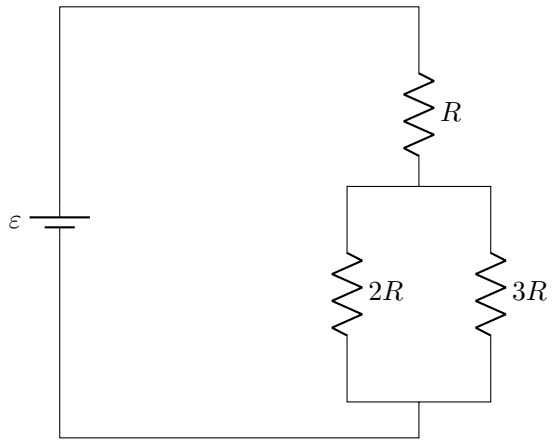

That is, R_1 is in series with the parallel combination of R_2 and R_3.

Part (b) Since R_2 and R_3 are in parallel, we first combine them,

$$\frac{1}{R_{23}} = \frac{1}{R_2} + \frac{1}{R_3} = \frac{1}{2R} + \frac{1}{3R} = \frac{5}{6R}\,.$$

Therefore,

$$R_{23} = \frac{6R}{5}\,.$$

Now this parallel combination R_{23} is in series with $R_1 = R$, so the total equivalent resistance of the circuit is

$$R_{\text{eq}} = R_1 + R_{23} = R + \frac{6R}{5} = \frac{11R}{5}\,.$$

Part (c) The current going through the battery is found from Ohm's law using the equivalent resistance,

$$I_{\text{battery}} = \frac{\varepsilon}{R_{\text{eq}}} = \frac{\varepsilon}{11R/5} = \frac{5\varepsilon}{11R}\,.$$

Since the resistor R_1 is in series with the battery before the junction, it carries the same current as the battery. Thus

$$I_1 = I_{\text{battery}} = \frac{5\varepsilon}{11R}\,.$$

Part (d) The voltage drop across R_1 is found, using Ohm's law again,

$$V_1 = I_1 R_1 = \left(\frac{5\varepsilon}{11R}\right) R = \frac{5\varepsilon}{11}\,.$$

Since the battery provides total voltage ε, and R_1 is in series with the parallel part, the remaining voltage must be across the parallel part,

$$V_{23} = \varepsilon - V_1 = \varepsilon - \frac{5\varepsilon}{11} = \frac{6\varepsilon}{11}\,.$$

Because R_2 and R_3 are in parallel, they have the same voltage drop. Therefore,

$$V_2 = V_3 = \frac{6\varepsilon}{11}\,.$$

Part (e) Now use Ohm's law on each branch. For resistor $R_2 = 2R$,

$$I_2 = \frac{V_2}{R_2} = \frac{(6\varepsilon/11)}{2R} = \frac{3\varepsilon}{11R}\,.$$

For resistor $R_3 = 3R$,

$$I_3 = \frac{V_3}{R_3} = \frac{(6\varepsilon/11)}{3R} = \frac{2\varepsilon}{11R}\,.$$

As a quick check,

$$I_2 + I_3 = \frac{3\varepsilon}{11R} + \frac{2\varepsilon}{11R} = \frac{5\varepsilon}{11R} = I_{\text{battery}}\,,$$

which agrees with what we found in part (c).

Part (f) The energy dissipated by a resistor in time Δt is

$$E = P\Delta t\,.$$

Here $\Delta t = 10\,\text{seconds}$. There are many ways to compute the power, for example $P = IV$, $P = I^2R$, or $P = V^2/R$. They are all related by Ohm's law: If you apply Ohm's law to one of them, you can get one of the other ones. Let us use $P = IV$ in this part.

For resistor R_1,

$$E_1 = I_1 V_1 (10\,\text{s}) = \left(\frac{5\varepsilon}{11R}\right)\left(\frac{5\varepsilon}{11}\right)(10) = \frac{250\varepsilon^2}{121R}\,\text{J}\,.$$

For resistor R_2,

$$E_2 = I_2 V_2 (10\,\text{s}) = \left(\frac{3\varepsilon}{11R}\right)\left(\frac{6\varepsilon}{11}\right)(10) = \frac{180\varepsilon^2}{121R}\,\text{J}\,.$$

For resistor R_3,

$$E_3 = I_3 V_3 (10\,\text{s}) = \left(\frac{2\varepsilon}{11R}\right)\left(\frac{6\varepsilon}{11}\right)(10) = \frac{120\varepsilon^2}{121R}\,\text{J}\,.$$

Part (g) The resistance of a conductor is

$$R = \frac{\rho L}{A}\,,$$

where ρ is the resistivity, L is the length, and A is the cross-sectional area of the conductor. The new resistor R_4 is made of the same material as R_3, so the resistivity stays the same. We are also told that R_4 has the same resistance as R_3, but twice the length. Thus

$$R_3 = \frac{\rho L_3}{A_3}\,, \qquad R_4 = \frac{\rho(2L_3)}{A_4}\,.$$

Since $R_4 = R_3$,

$$\frac{\rho(2L_3)}{A_4} = \frac{\rho L_3}{A_3}\,.$$

Canceling the common factors ρ and L_3, we get

$$\frac{2}{A_4} = \frac{1}{A_3}\,,$$

so

$$A_4 = 2A_3\,.$$

Therefore the new resistor must have twice the cross-sectional area of R_3 in order to keep the same resistance while being twice as long.

Problem 2

Now resistor R_1 is replaced by a capacitor C_1 that is initially uncharged. The key fact for this entire problem is the following: An uncharged capacitor behaves like a wire immediately after the circuit is completed, but after a very long time it behaves like an open circuit (a break in the wire). Once you keep this picture in mind, the whole problem becomes very manageable, and we just need to consider two limits separately.

Part (a) Right after the circuit is completed, C_1 is uncharged, so it behaves like a wire. Therefore the equivalent circuit at $t = 0$ is just a battery directly connected across the parallel combination of R_2 and R_3. Here we can draw the equivalent circuit by simply replacing the capacitor with a wire.

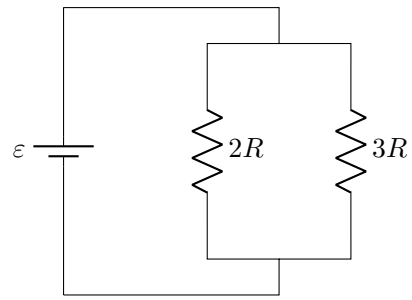

So at $t = 0$, the capacitor can be ignored and the circuit is simply R_2 in parallel with R_3.

Part (b) Since R_2 and R_3 are directly across the battery (they are in parallel, and the parallel chunk is connected across the battery directly) right after the circuit is completed, each branch has voltage drop ε across it. Therefore,

$$I_2(t = 0) = \frac{\varepsilon}{R_2} = \frac{\varepsilon}{2R},$$

and

$$I_3(t = 0) = \frac{\varepsilon}{R_3} = \frac{\varepsilon}{3R}.$$

Part (c) A decade later, the capacitor is fully charged. A fully charged capacitor behaves like an open circuit, and here the capacitor sits in series before the two resistor branches. Therefore the circuit is broken and no current can flow anywhere in the circuit. Hence

$$I_2(t \to \infty) = 0\,\mathrm{A}, \qquad I_3(t \to \infty) = 0\,\mathrm{A}.$$

Part (d) After a long time, since the current through R_2 and R_3 is zero, the voltage drop across each resistor is also zero because $V = IR$. Therefore the entire battery emf must appear across the capacitor,

$$V_C(t \to \infty) = \varepsilon.$$

The reason that the charged capacitor will consume all supplied emf from the battery is the following: Charging the capacitor means pumping charges to the capacitor, but storing more charges on the capacitor requires having a larger electric potential difference across the capacitor ($Q = CV$). The battery can supply an emf of ε, thus it is

able to pump charges to the capacitor until the potential difference across the capacitor reaches ε.

A better way to understand this picture (when the capacitor is fully charged) is that, the battery supplies a battery emf ε (this is a voltage gain if we go across the battery), and the capacitor will consume all of this voltage ε when it is fully charged (so there will be a voltage drop when we go across the capacitor). Therefore, there is no voltage left for the resistors (after the charged capacitor) to consume, and thus $I = V/R = 0$ for the resistors.

Part (e) When the capacitor is uncharged, the amount of charge stored on the capacitor is zero, so we have $Q = 0$. The stored energy in a capacitor is

$$U_C = \frac{1}{2}\frac{Q^2}{C}\,.$$

It is written in this form (instead of other forms that could be used to calculate the capacitor energy) because the capacitance C is given in the problem and we know that $Q = 0$ when the capacitor is uncharged. Therefore,

$$U_{C,\text{uncharged}} = \frac{1}{2}\frac{0^2}{C} = 0\,\text{J}\,.$$

At the initial time, the capacitor is uncharged, so the voltage drop across it must be zero (since $C = Q/V$ for capacitance, then $V = Q/C$, so for an uncharged capacitor $Q = 0$, we have $V = 0$). If you have this argument in your understanding and have it written down in your solution, you can also use

$$U_{C,\text{uncharged}} = \frac{1}{2}CV^2 = \frac{1}{2}C(0)^2 = 0\,\text{J}$$

to justify that the capacitor stores zero energy when it is uncharged.

Part (f) When the capacitor is fully charged, we just found from part (d) that the voltage across it is ε. Therefore,

$$U_{C,\text{charged}} = \frac{1}{2}C\varepsilon^2\,.$$

Part (g) The amount of charge stored on one of the plates is related to capacitance and voltage by

$$Q = CV\,.$$

Since the capacitor is fully charged and has voltage ε across it,

$$Q = C\varepsilon\,.$$

Part (h) Now a dielectric with $\kappa > 1$ is inserted between the plates. The dielectric material changes the capacitance of the capacitor. As long as the capacitor is still connected to the battery, the battery can pump more charges to the capacitor to maintain the potential difference across the capacitor (we also argued in part (d) that the capacitor will always try to consume all the voltage supplied by the battery). As you

can also verify, in our calculation of the voltage drop across the capacitor in part (d), it does not depend on the capacitance of the capacitor. Thus $V_C(t \to \infty) = \varepsilon$ is unchanged.

However, due to the dielectric, the capacitance becomes

$$C' = \kappa C \,.$$

Therefore the stored charge becomes

$$Q' = C'V = (\kappa C)\varepsilon = \kappa Q \,,$$

so the amount of charge on the plates increases by a factor of κ. The stored energy is now

$$U_C' = \frac{1}{2}C'V^2 = \frac{1}{2}(\kappa C)\varepsilon^2 = \kappa U_C \,,$$

so the stored energy also increases by a factor of κ.

In another story, consider the case where the capacitor is disconnected from the circuit after it has been fully charged. If I then insert a dielectric material (assume $\kappa > 1$) into the capacitor, again, the capacitance C increases, but the voltage V across the capacitor will decrease. This is because, the charge Q stored in the capacitor is unchanged when the capacitor is disconnected from the circuit, then $V = Q/C$ decreases due to the increase in capacitance. Comparing the two stories here: One has the capacitor being connected to the battery at all times, so the battery can pump more charges to the capacitor to maintain the voltage across the capacitor. The other one has the capacitor being disconnected from the circuit, the amount of charge on the capacitor is maintained, and voltage across the capacitor will change correspondingly.

Part (i) Now we include the internal resistance r of the battery, but we are still looking at the moment right after the circuit is completed. As in part (a), the capacitor behaves like a wire at $t = 0$, so the external circuit is just R_2 in parallel with R_3. The equivalent resistance of the parallel part of the circuit was computed in Part (b) of Problem 1,

$$R_{23} = \frac{6R}{5} \,.$$

Now the internal resistance r is in series with this parallel combination, so the total resistance seen by the battery is

$$R_{\text{total}} = r + \frac{6R}{5} \,.$$

Hence the total current through the battery is

$$I_{\text{battery}} = \frac{\varepsilon}{r + 6R/5} = \frac{5\varepsilon}{5r + 6R} \,.$$

Part (j) Talking about the terminal voltage, we are looking at the voltage gain across the "battery with its internal resistance." That is, we can consider a box that we call battery+r, and inside this box, we have the battery (with emf ε) in series with a little resistor with resistance r. Then the terminal voltage is measured across the two points right outside of the box. In this problem, outside of the box, the only thing that is in the

circuit is the parallel resistor pair. Therefore, the terminal voltage of the battery is also the voltage drop across the parallel resistor pair (as they are the only thing connected to the battery+r box),

$$V_{\text{parallel}} = I_{\text{battery}} R_{23} = \left(\frac{5\varepsilon}{5r + 6R}\right)\left(\frac{6R}{5}\right) = \frac{6R\varepsilon}{5r + 6R}\,.$$

Notice that this is the same as

$$V_{\text{parallel}} = \varepsilon - I_{\text{battery}} r = \varepsilon - \frac{5\varepsilon r}{5r + 6R} = \frac{5r\varepsilon + 6R\varepsilon}{5r + 6R} - \frac{5\varepsilon r}{5r + 6R} = \frac{6R\varepsilon}{5r + 6R}\,.$$

This is the actual voltage supplied by the battery whenever it has an internal resistance. The logic should be clear: The battery provides an emf ε, and its internal resistance r will consume part of the supplied voltage ε, thus the actual terminal voltage supplied by the battery is

$$V_{\text{terminal}} = \varepsilon - I_{\text{battery}} r\,.$$

Part (k) Now all three components are capacitors: $C_1 = C$, $C_2 = 2C$, and $C_3 = 3C$. The wiring is the same as before, so C_2 and C_3 are in parallel, and that parallel combination is in series with C_1. First combine the parallel part:

$$C_{23} = C_2 + C_3 = 2C + 3C = 5C\,.$$

Now combine C_1 and C_{23} in series:

$$\frac{1}{C_{\text{eq}}} = \frac{1}{C_1} + \frac{1}{C_{23}} = \frac{1}{C} + \frac{1}{5C} = \frac{6}{5C}\,.$$

Therefore,

$$C_{\text{eq}} = \frac{5C}{6}\,.$$

In this case, we will not ask you to find the current through or voltage drop across the capacitors, because the physics there is more subtle.

The Canton Tower at Guangzhou, China. Pictured in December 2025.

Get enough sleep before your exam :)