Physics 5C Discussion (Week 6)

Department of Physics and Astronomy, UCLA

In order to make electron flow in a conductor to create a current, we need to apply a electric potential difference across the two ends of the conductor. Let us call the potential difference across the two ends as V, and the resulting current as I, we have the famous Ohm's Law, [1]

$$V = RI\,,$$

where R is the resistance of the conductor. As we discussed last week, R represents how difficult it is for electrons to flow in a conductor.

Problem 1 Human body is a huge conductor with finite resistance. Across Jinyan's two dry hands, the resistance is around $R = 100\,\mathrm{k}\Omega$, but an electric current as low as $90\,\mathrm{mA}$ can cause ventricular fibrillation.

Part (a) The voltage supplied by a standard U.S. power outlet is $120\,\mathrm{V}$. For doing a physics demo, will it be too risky for Jinyan to stick his hands into the power outlet? [2]

Part (b) It takes around $20\,\mathrm{kJ}$ of energy to cook an egg. The power (energy per second) delivered by a current through a conductor is calculated via

$$P = IV\,.$$

Hypothetically, if Jinyan sticks his hands into the standard power outlet for 10 seconds, will he be cooked? [3]

[1] You can think of this in this way: Imagine a cylindrical conductor. The top circular disk of it is positively charged and the bottom disk is negatively charged. Then electrons in the cylinder will want to move upwards towards the top disk due to the potential difference, and that creates a current.

[2] Don't be crazy, please don't do it :(

[3] Again, please don't do it.

The followings are standard circuit problems. I will show you the full process to solve Problem 2 during discussion, and Problems 3 and 4 are left to you for practice. For these problems, assume that the resistances in the battery and wires are negligible.

Problem 2 Jinyan has built a circuit as shown, but he has trouble analyzing the circuit. Please help him out!

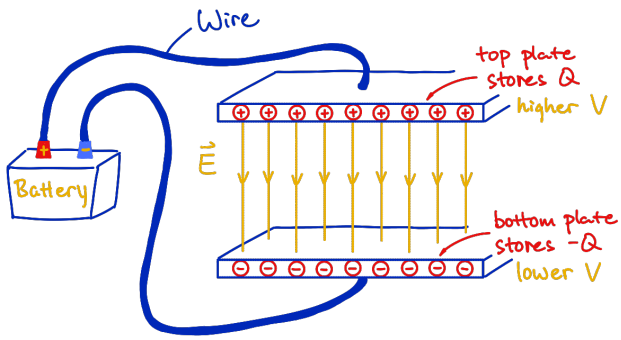

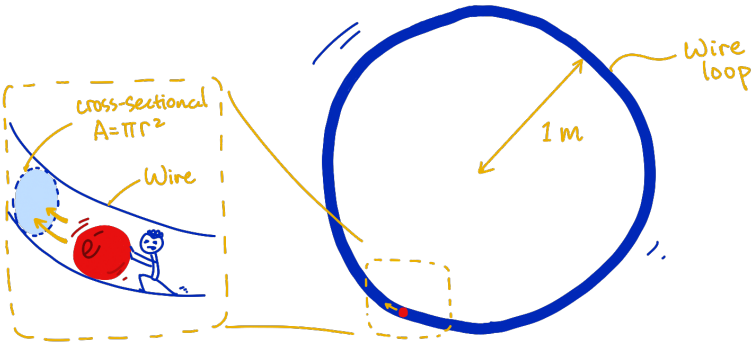

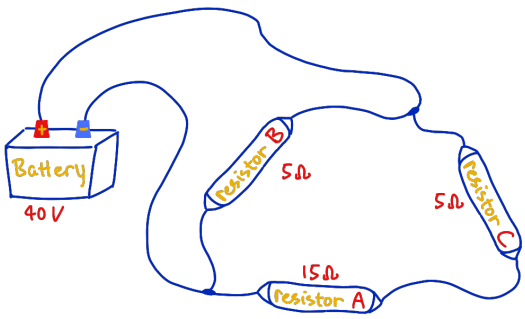

Part (a) Based on the wiring of the components, draw the equivalent circuit diagram.
Part (b) Find the voltage drop across resistor A.
Part (c) How should I use a voltmeter to measure the voltage across resistor A?

Problem 3 Jinyan's evil labmate Michael sneakily changes one of the wires.

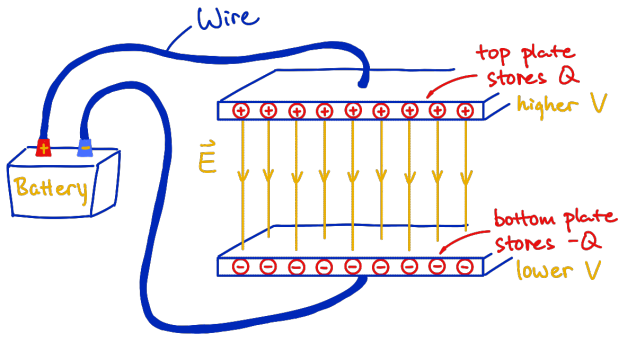

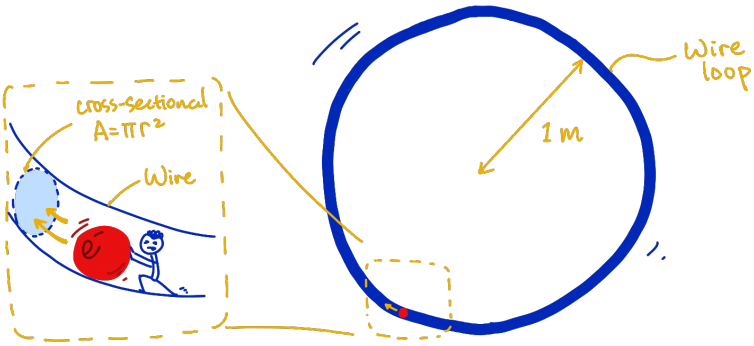

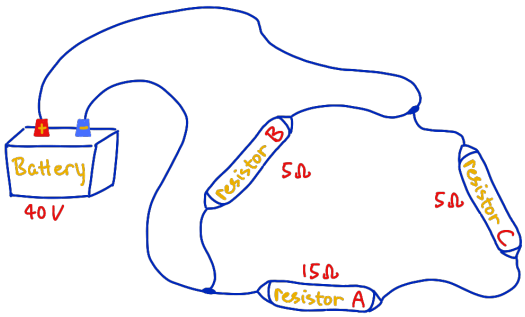

Part (a) Based on the wiring of the components, draw the equivalent circuit diagram.
Part (b) Find the current through resistor A and resistor B.[4]
Part (c) How should I use an ammeter to measure the current through resistor A?

Problem 4 Jinyan finds something weird going on and rewired the components, but he gets confused again. Please help!

[4]Other than the quantities listed on the figure, you should NOT reuse anything you computed in Problem 2. These are completely different circuits. If you draw out the correct circuit diagram and think about it carefully, you will find Problem 3 is very straightforward and easy, and you should be able to answer all parts of Problem 3 in 1 minute.

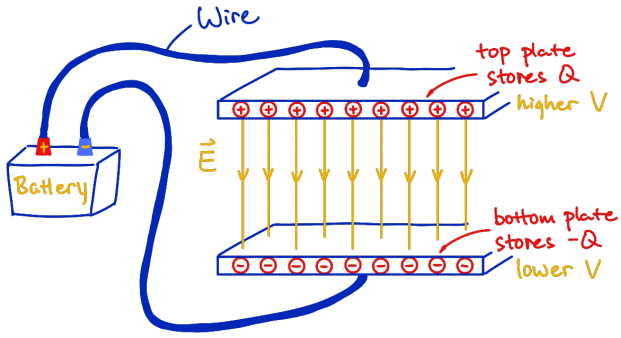

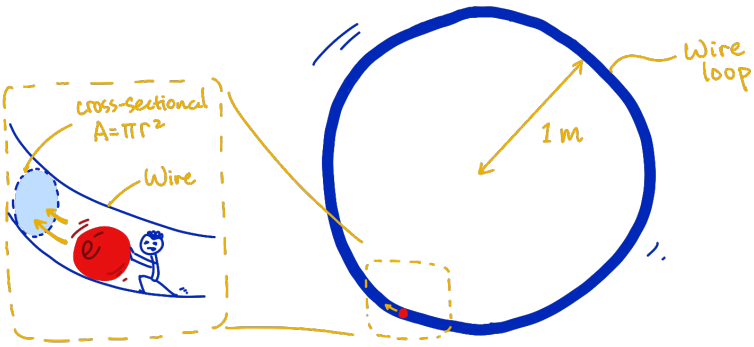

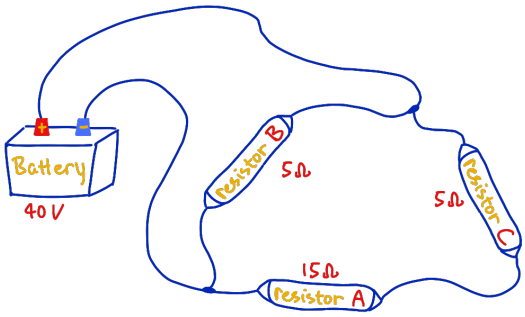

Part (a) Based on the wiring of the components, draw the equivalent circuit diagram.
Part (b) Find the total equivalent resistance of the circuit.
Part (c) Find the current through the battery.
Part (d) Find the current through resistor A.
Part (e) Find the voltage drop across resistor A.
Part (f) Find the voltage drop across resistor B.
Part (g) Find the current through resistor B.
Part (h) Find the power dissipated by resistor B.