Physics 5C Discussion (Week 6)

Department of Physics and Astronomy, UCLA

Problem 1 Human body is a huge conductor with finite resistance. Across Jinyan's two dry hands, the resistance is around $R = 100\,\mathrm{k}\Omega$, but an electric current as low as $90\,\mathrm{mA}$ can cause ventricular fibrillation.

Part (a) The voltage supplied by a standard U.S. power outlet is $120\,\mathrm{V}$. For doing a physics demo, will it be too risky for Jinyan to stick his hands into the power outlet? [1]

Part (b) It takes around $20\,\mathrm{kJ}$ of energy to cook an egg. The power (energy per second) delivered by a current through a conductor is calculated via

$$P = IV\,.$$

Hypothetically, if Jinyan sticks his hands into the standard power outlet for 10 seconds, will he be cooked? [2]

The followings are standard circuit problems. I will show you the full process to solve Problem 2 during discussion, and Problems 3 and 4 are left to you for practice. For these problems, assume that the resistances in the battery and wires are negligible.

Problem 2 Jinyan has built a circuit as shown, but he has trouble analyzing the circuit. Please help him out!

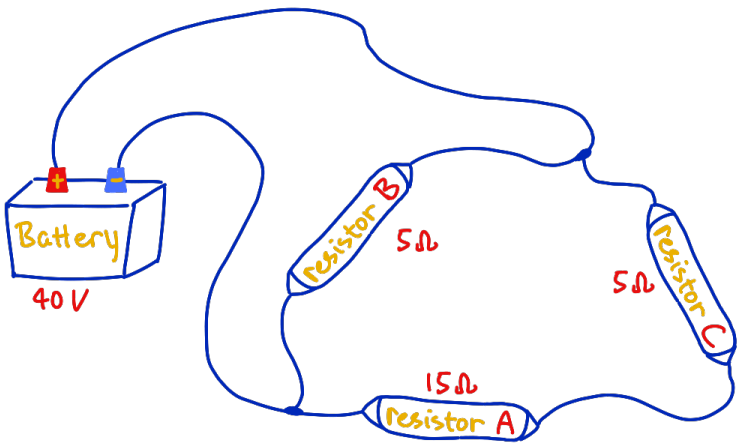

Part (a) Based on the wiring of the components, draw the equivalent circuit diagram.
Part (b) Find the voltage drop across resistor A.
Part (c) How should I use a voltmeter to measure the voltage across resistor A?

---

[1] Don't be crazy, please don't do it :(

[2] Again, please don't do it.

Problem 3 Jinyan's evil labmate Michael sneakily changes one of the wires.

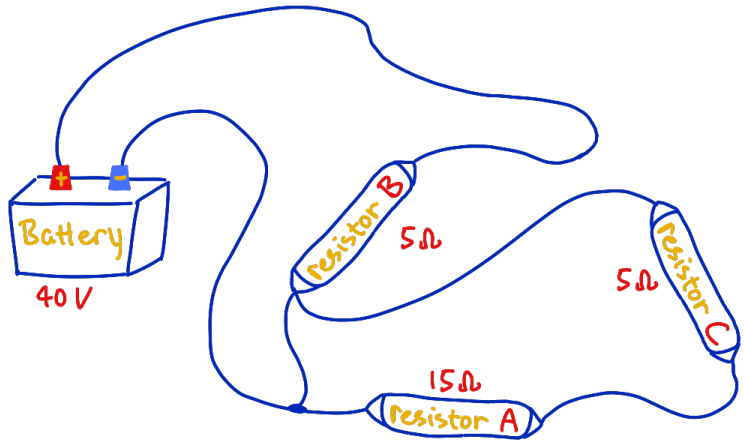

Part (a) Based on the wiring of the components, draw the equivalent circuit diagram.
Part (b) Find the current through resistor A and resistor B.[3]
Part (c) How should I use an ammeter to measure the current through resistor A?

Problem 4 Jinyan finds something weird going on and rewired the components, but he gets confused again. Please help!

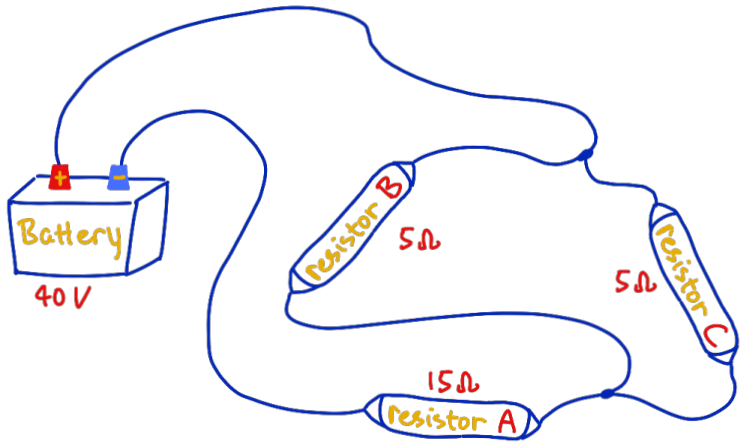

Part (a) Based on the wiring of the components, draw the equivalent circuit diagram.
Part (b) Find the total equivalent resistance of the circuit.
Part (c) Find the current through the battery.
Part (d) Find the current through resistor A.
Part (e) Find the voltage drop across resistor A.
Part (f) Find the voltage drop across resistor B.
Part (g) Find the current through resistor B.
Part (h) Find the power dissipated by resistor B.

[3]Other than the quantities listed on the figure, you should NOT reuse anything you computed in Problem 2. These are completely different circuits. If you draw out the correct circuit diagram and think about it carefully, you will find Problem 3 is very straightforward and easy, and you should be able to answer all parts of Problem 3 in 1 minute.

Problem 1

Part (a) We use Ohm's law,

$$V = IR\,,$$

so the current through Jinyan is

$$I = \frac{V}{R} = \frac{120\,\mathrm{V}}{100000\,\Omega} = 0.0012\,\mathrm{A} = 1.2\,\mathrm{mA}\,.$$

This is much smaller than 90 mA, which is the value mentioned in the problem for ventricular fibrillation. So, according to this very rough dry-hands model, the current is below that dangerous threshold. However, it is still a terrible idea in real life. Human-body resistance can change a lot, especially if the skin is wet or damaged. I am enjoying my life and I don't want to scarify myself for science. Theory is theory, realistically it is still too risky to do as a demo.

Part (b) The power delivered is

$$P = IV = (0.0012\,\mathrm{A})(120\,\mathrm{V}) = 0.144\,\mathrm{W}\,.$$

Recall that 1 Watt means 1 Joule per second, so in 10 seconds the delivered energy is

$$E = Pt = (0.144\,\mathrm{J/s})(10\,\mathrm{s}) = 1.44\,\mathrm{J}\,.$$

But it takes around 20000 J to cook an egg, and 1.44 J is nowhere close to that. Therefore, in this simplified model, Jinyan will definitely not be cooked.

Problem 2

Part (a) To analyze the circuit, first identify the two battery terminals. The top battery terminal is connected to the top node, and the bottom battery terminal is connected to the lower-left node. Between these same two nodes, resistor B forms one branch, while resistors C and A together form another branch. Therefore, resistor B is in parallel with the series combination of C and A.

The equivalent circuit is

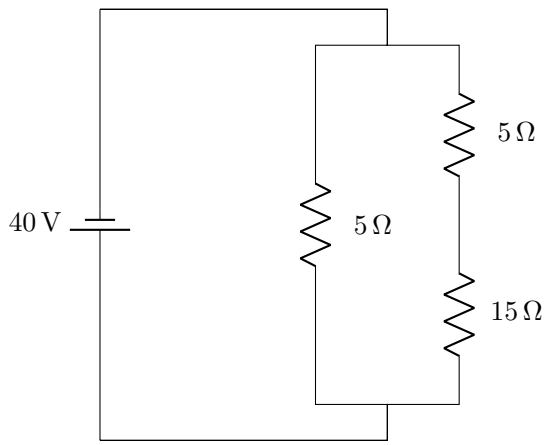

Part (b) In the branch that contains resistors C and A, the two resistors are in series, so their equivalent resistance is

$$R_{CA} = R_C + R_A = 5\,\Omega + 15\,\Omega = 20\,\Omega\,.$$

Since this whole branch is directly connected across the 40 V battery, the total voltage across the branch is 40 V. Therefore the current in this branch is

$$I_{CA} = \frac{40\,\mathrm{V}}{20\,\Omega} = 2\,\mathrm{A}\,.$$

Because resistors C and A are in series, they carry the same current. So resistor A carries a current 2 A, and thus the voltage drop across resistor A is

$$V_A = I_A R_A = (2\,\mathrm{A})(15\,\Omega) = 30\,\mathrm{V}\,.$$

So the voltage drop across resistor A is

$$V_A = 30\,\mathrm{V}\,.$$

Part (c) A voltmeter should always be connected in parallel with the component whose voltage you want to measure. So you should place one probe on each end of resistor A. If you want a positive reading on the voltmeter, make sure to place the probes following the direction of the current in the circuit.

Problem 3

Here, resistor B is the only resistor that is actually connected across the battery. The pair A and C is disconnected from the battery and forms an isolated subcircuit.

Part (a) The equivalent circuit is

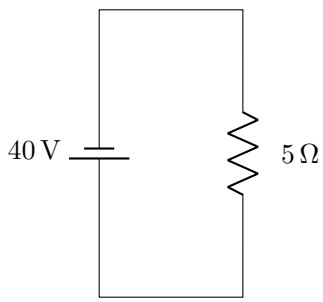

Resistor B is the only component powered by the battery.

Part (b) Since resistor B is directly across the 40 V battery,

$$I_B = \frac{V}{R_B} = \frac{40\,\mathrm{V}}{5\,\Omega} = 8\,\mathrm{A}\,.$$

Now consider resistor A. The loop containing A and C is not connected to the battery, so there is no source pushing charges around that loop. Therefore,

$$I_A = 0\,\mathrm{A}\,.$$

So the answers are

$$I_A = 0\,\mathrm{A}\,, \qquad I_B = 8\,\mathrm{A}\,.$$

Part (c) An ammeter should be connected in series with the component whose current you want to measure. So you should break the branch containing resistor A and insert the ammeter into that branch. In this problem it should read $0\,\mathrm{A}$ because there is no current through resistor A.

Problem 4

In this configuration, nothing is shorted out. Resistor A is in series with the parallel combination of B and C.

Part (a) The equivalent circuit is

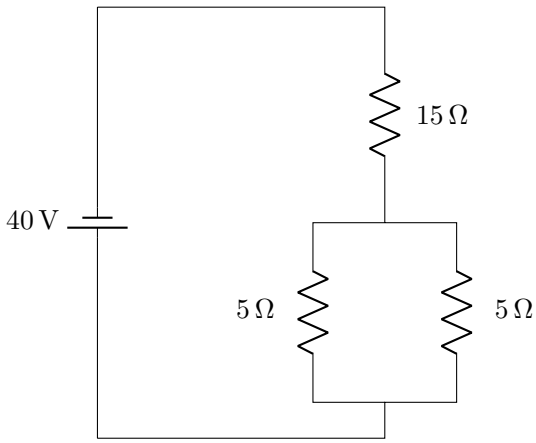

That is, R_A is in series with $(R_B \parallel R_C)$.

Part (b) Since resistors B and C are in parallel, their equivalent resistance is

$$\frac{1}{R_{BC}} = \frac{1}{R_B} + \frac{1}{R_C} = \frac{1}{5} + \frac{1}{5} = \frac{2}{5}\,,$$

so

$$R_{BC} = \frac{5}{2}\,\Omega = 2.5\,\Omega\,.$$

Now this parallel combination is in series with resistor A, so the total equivalent resistance is

$$R_{\mathrm{eq}} = R_A + R_{BC} = 15\,\Omega + 2.5\,\Omega = 17.5\,\Omega\,.$$

Part (c) The current through the battery is

$$I_{\mathrm{battery}} = \frac{V}{R_{\mathrm{eq}}} = \frac{40\,\mathrm{V}}{17.5\,\Omega} = \frac{16}{7}\,\mathrm{A} = 2.29\,\mathrm{A}\,.$$

Part (d) Because resistor A is in series with the battery and the parallel branch, it carries the same current as the battery. Therefore,

$$I_A = I_{\text{battery}} = \frac{16}{7}\,\text{A} = 2.29\,\text{A}\,.$$

Part (e) The voltage drop across resistor A is

$$V_A = I_A R_A = \left(\frac{16}{7}\,\text{A}\right)(15\,\Omega) = \frac{240}{7}\,\text{V} = 34.3\,\text{V}\,.$$

Part (f) The remaining voltage must be across the parallel branch containing B and C, so

$$V_B = 40\,\text{V} - V_A = 40 - \frac{240}{7} = \frac{40}{7}\,\text{V} = 5.71\,\text{V}\,.$$

Since B and C are in parallel, they have the same voltage drop.
Part (g) Therefore the current through resistor B is

$$I_B = \frac{V_B}{R_B} = \frac{(40/7)\,\text{V}}{5\,\Omega} = \frac{8}{7}\,\text{A} = 1.14\,\text{A}\,.$$

Part (h) The power dissipated by resistor B is

$$P_B = I_B V_B = \left(\frac{8}{7}\,\text{A}\right)\left(\frac{40}{7}\,\text{V}\right) = \frac{320}{49}\,\text{W} = 6.53\,\text{W}\,.$$

Equivalently, you can compute

$$P_B = I_B^2 R_B = \left(\frac{8}{7}\,\text{A}\right)^2(5\,\Omega) = \frac{320}{49}\,\text{W} = 6.53\,\text{W}\,.$$

So the power dissipated by resistor B is

$$P_B = 6.53\,\text{W}\,.$$