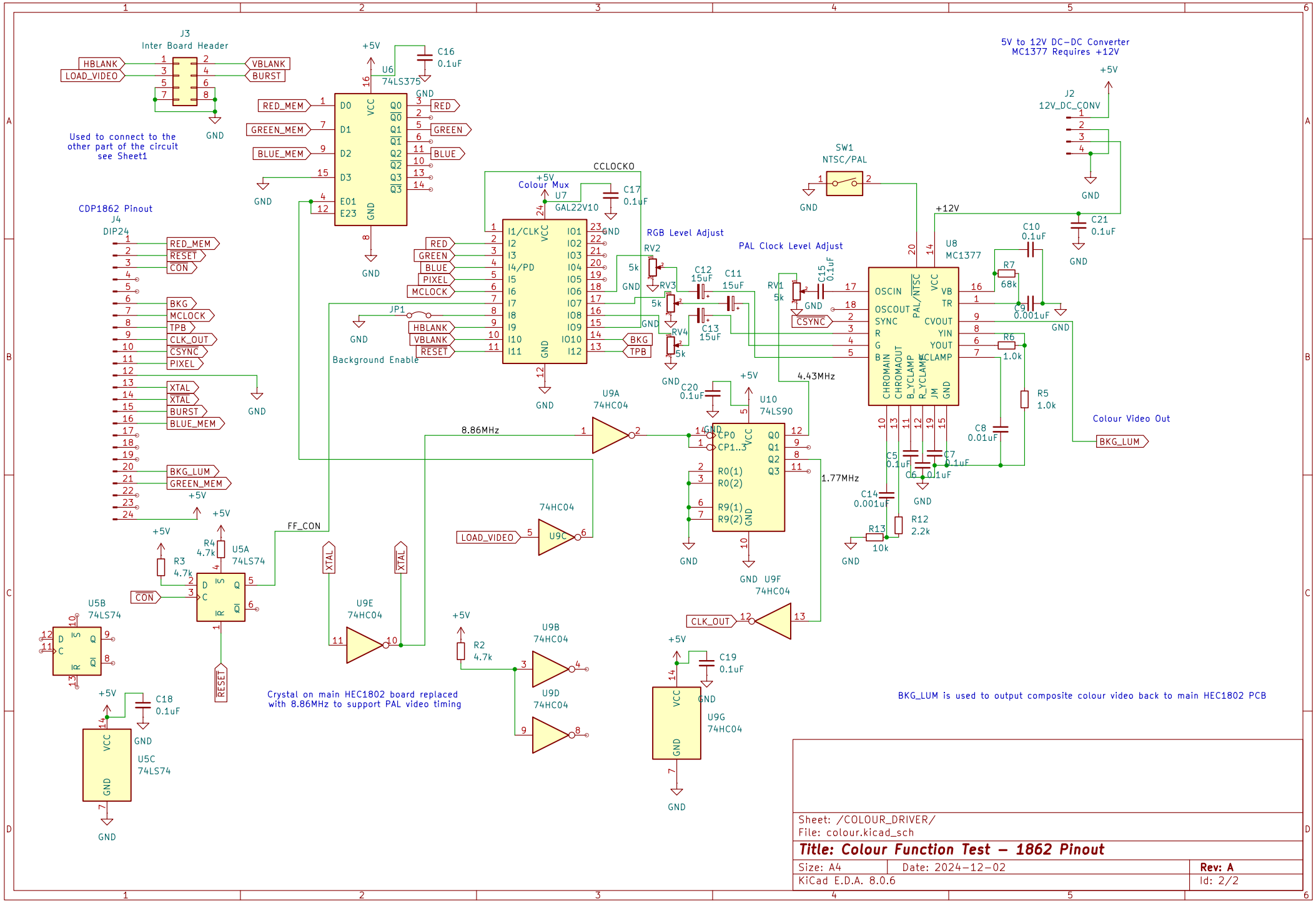

Sheet: /COLOUR_DRIVER/
File: colour.kicad_sch

Title: Colour Function Test – 1862 Pinout

Size: A4	Date: 2024-12-02	Rev: A
KiCad E.D.A. 8.0.6		Id: 2/2