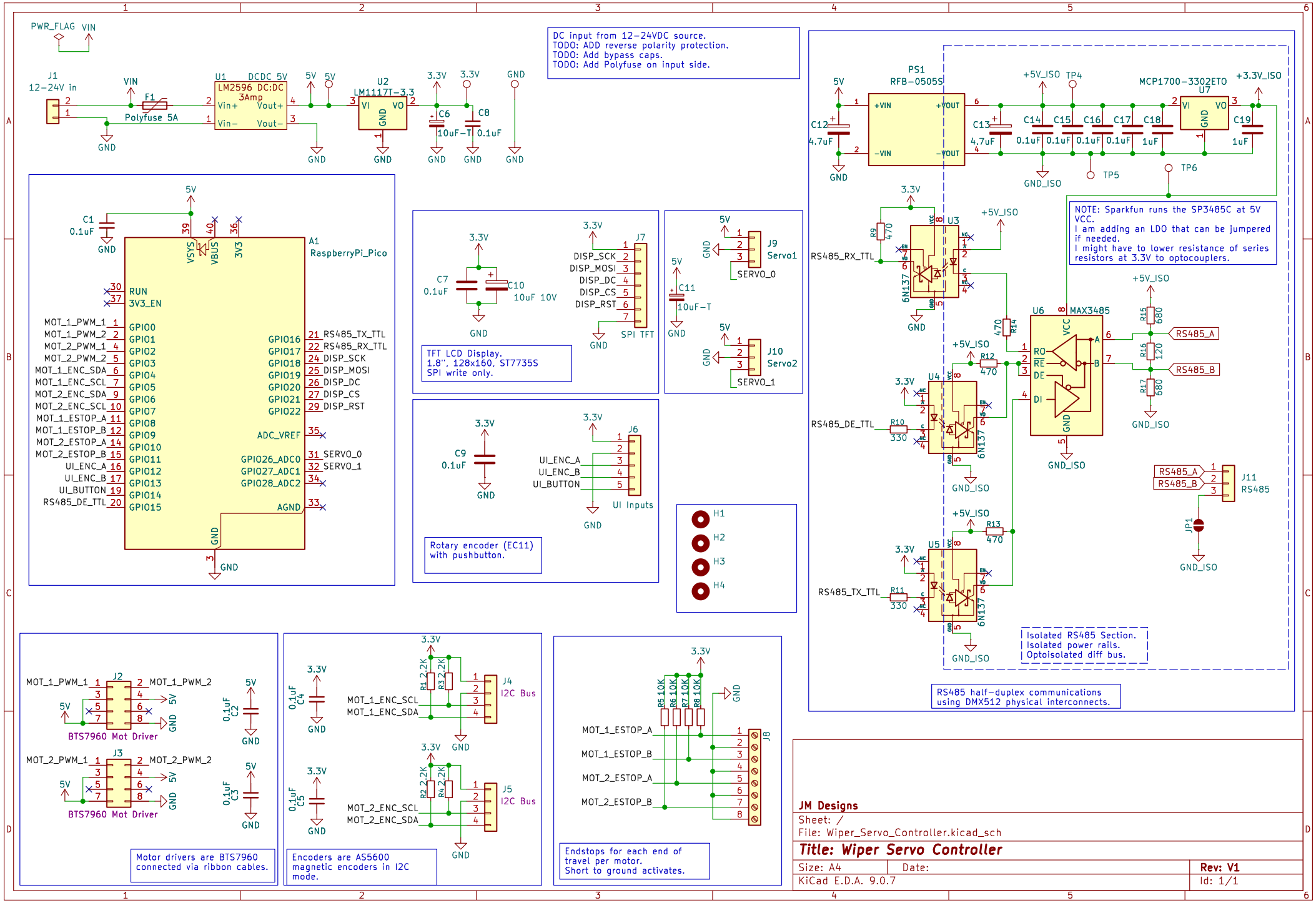
DC input from 12-24VDC source.
TODO: ADD reverse polarity protection.
TODO: Add bypass caps.
TODO: Add Polyfuse on input side.
PWR_FLAG
VIN
J1
12-24V in
F1
Polyfuse 5A
U1
DCDC 5V
LM2596 DC:DC 3Amp
Vin+
Vout+
Vin-
Vout-
U2
LM1117T-3.3
VI
VO
GND
C6
10uF-T
C8
0.1uF
5V
3.3V
A1
RaspberryPi_Pico
C1
0.1uF
RUN
3V3_EN
VSYS
VBUS
3V3
MOT_1_PWM_1
MOT_1_PWM_2
MOT_2_PWM_1
MOT_2_PWM_2
MOT_1_ENC_SDA
MOT_1_ENC_SCL
MOT_2_ENC_SDA
MOT_2_ENC_SCL
MOT_1_ESTOP_A
MOT_1_ESTOP_B
MOT_2_ESTOP_A
MOT_2_ESTOP_B
UI_ENC_A
UI_ENC_B
UI_BUTTON
RS485_DE_TTL
GPIO0
GPIO1
GPIO2
GPIO3
GPIO4
GPIO5
GPIO6
GPIO7
GPIO8
GPIO9
GPIO10
GPIO11
GPIO12
GPIO13
GPIO14
GPIO15
GPIO16
GPIO17
GPIO18
GPIO19
GPIO20
GPIO21
GPIO22
ADC_VREF
GPIO26_ADC0
GPIO27_ADC1
GPIO28_ADC2
AGND
RS485_TX_TTL
RS485_RX_TTL
DISP_SCK
DISP_MOSI
DISP_DC
DISP_CS
DISP_RST
SERVO_0
SERVO_1
C7
0.1uF
C10
10uF 10V
J7
SPI TFT
TFT LCD Display.
1.8", 128x160, ST7735S
SPI write only.
C11
10uF-T
J9
Servo1
J10
Servo2
C9
0.1uF
J6
UI Inputs
Rotary encoder (EC11)
with pushbutton.
H1
H2
H3
H4
PS1
RFB-0505S
+VIN
-VIN
+VOUT
-VOUT
C12
4.7uF
C13
4.7uF
+5V_ISO
TP4
TP5
TP6
MCP1700-3302ETO
U7
+3.3V_ISO
C14
C15
C16
C17
C18
C19
0.1uF
1uF
GND_ISO
NOTE: Sparkfun runs the SP3485C at 5V VCC.
I am adding an LDO that can be jumpered if needed.
I might have to lower resistance of series resistors at 3.3V to optocouplers.
U3
U4
U5
6N137
R9
470
R10
330
R11
330
R12
470
R13
470
R14
470
U6
MAX3485
RO
RE
DE
DI
A
B
R15
680
R16
120
R17
680
RS485_A
RS485_B
J11
RS485
JP1
RS485 half-duplex communications using DMX512 physical interconnects.
Isolated RS485 Section.
Isolated power rails.
Optoisolated diff bus.
J2
J3
MOT_1_PWM_1
MOT_1_PWM_2
MOT_2_PWM_1
MOT_2_PWM_2
BTS7960 Mot Driver
C2
C3
0.1uF
Motor drivers are BTS7960 connected via ribbon cables.
C4
C5
R1 2.2K
R3 2.2K
R2 2.2K
R4 2.2K
J4
J5
I2C Bus
MOT_1_ENC_SCL
MOT_1_ENC_SDA
MOT_2_ENC_SCL
MOT_2_ENC_SDA
Encoders are AS5600 magnetic encoders in I2C mode.
R5 10K
R6 10K
R7 10K
R8 10K
J8
Endstops for each end of travel per motor.
Short to ground activates.
JM Designs
Sheet: /
File: Wiper_Servo_Controller.kicad_sch
Title: Wiper Servo Controller
Size: A4
Date:
Rev: V1
KiCad E.D.A. 9.0.7
Id: 1/1