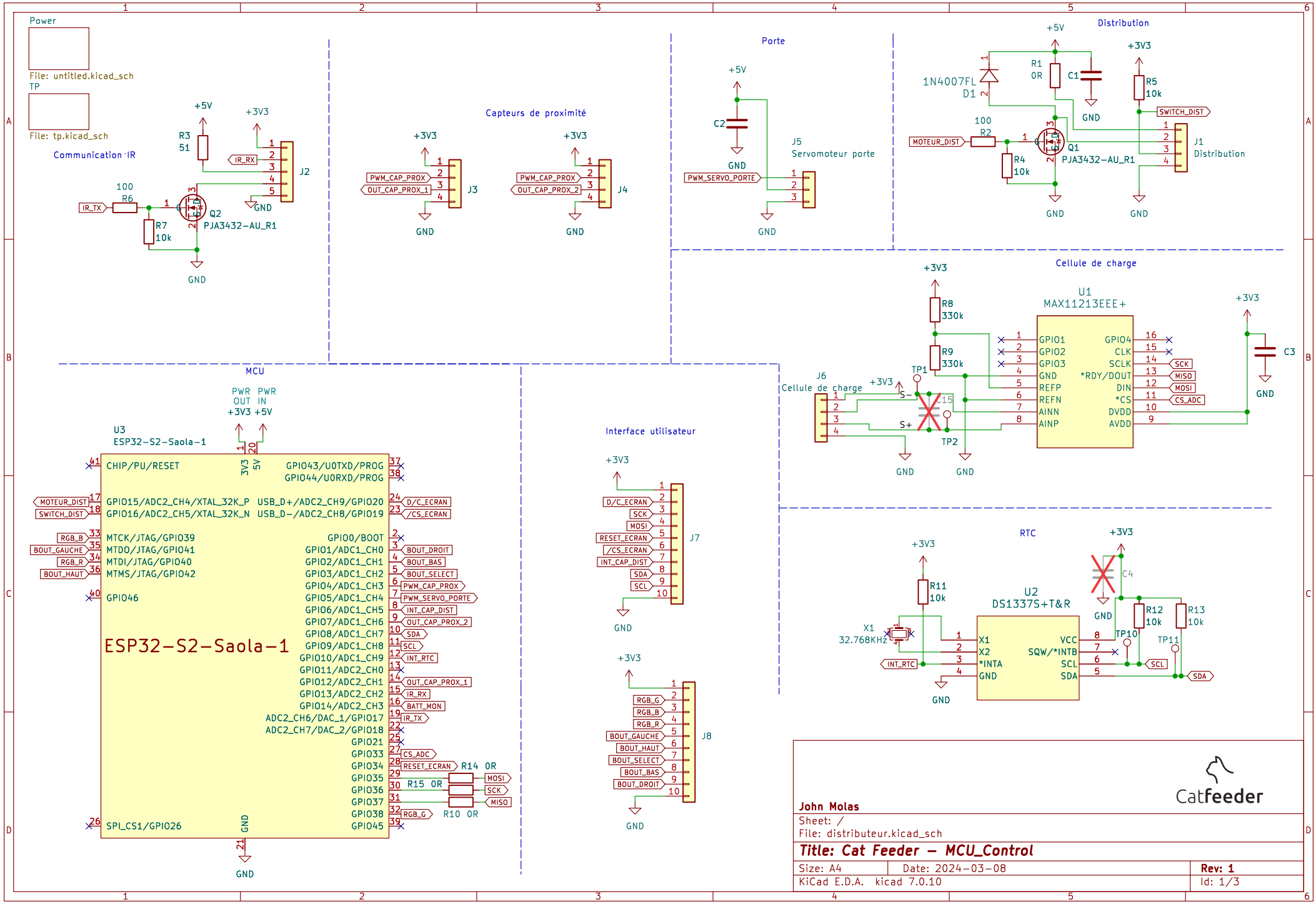
Power
File: untitled.kicad_sch
TP
File: tp.kicad_sch
Communication IR
+5V
+3V3
R3
51
IR_RX
J2
100
R6
IR_TX
Q2
PJA3432-AU_R1
R7
10k
GND
Capteurs de proximité
PWM_CAP_PROX
OUT_CAP_PROX_1
J3
OUT_CAP_PROX_2
J4
Porte
C2
J5
Servomoteur porte
PWM_SERVO_PORTE
Distribution
1N4007FL
D1
R1
0R
C1
R5
10k
SWITCH_DIST
MOTEUR_DIST
R2
R4
10k
Q1
PJA3432-AU_R1
J1
Distribution
Cellule de charge
R8
330k
R9
330k
U1
MAX11213EEE+
GPIO1
GPIO2
GPIO3
GND
REFP
REFN
AINN
AINP
GPIO4
CLK
SCLK
*RDY/DOUT
DIN
*CS
DVDD
AVDD
SCK
MISO
MOSI
CS_ADC
C3
J6
Cellule de charge
TP1
TP2
S-
S+
C15
MCU
PWR OUT +3V3
PWR IN +5V
U3
ESP32-S2-Saola-1
CHIP/PU/RESET
GPIO43/U0TXD/PROG
GPIO44/U0RXD/PROG
GPIO15/ADC2_CH4/XTAL_32K_P
USB_D+/ADC2_CH9/GPIO20
GPIO16/ADC2_CH5/XTAL_32K_N
USB_D-/ADC2_CH8/GPIO19
MOTEUR_DIST
SWITCH_DIST
D/C_ECRAN
/CS_ECRAN
MTCK/JTAG/GPIO39
MTDO/JTAG/GPIO41
MTDI/JTAG/GPIO40
MTMS/JTAG/GPIO42
RGB_B
BOUT_GAUCHE
RGB_R
BOUT_HAUT
GPIO46
GPIO0/BOOT
GPIO1/ADC1_CH0
GPIO2/ADC1_CH1
GPIO3/ADC1_CH2
GPIO4/ADC1_CH3
GPIO5/ADC1_CH4
GPIO6/ADC1_CH5
GPIO7/ADC1_CH6
GPIO8/ADC1_CH7
GPIO9/ADC1_CH8
GPIO10/ADC1_CH9
GPIO11/ADC2_CH0
GPIO12/ADC2_CH1
GPIO13/ADC2_CH2
GPIO14/ADC2_CH3
ADC2_CH6/DAC_1/GPIO17
ADC2_CH7/DAC_2/GPIO18
GPIO21
GPIO33
GPIO34
GPIO35
GPIO36
GPIO37
GPIO38
GPIO45
BOUT_DROIT
BOUT_BAS
BOUT_SELECT
PWM_CAP_PROX
PWM_SERVO_PORTE
INT_CAP_DIST
OUT_CAP_PROX_2
SDA
SCL
INT_RTC
OUT_CAP_PROX_1
IR_RX
BATT_MON
IR_TX
CS_ADC
RESET_ECRAN
R14 0R
R15 0R
R10 0R
MOSI
SCK
MISO
RGB_G
SPI_CS1/GPIO26
Interface utilisateur
J7
J8
RTC
R11
10k
X1
32.768KHz
U2
DS1337S+T&R
X1
X2
*INTA
GND
VCC
SQW/*INTB
SCL
SDA
C4
R12
10k
R13
10k
TP10
TP11
Catfeeder
John Molas
Sheet: /
File: distributeur.kicad_sch
Title: Cat Feeder – MCU_Control
Size: A4
Date: 2024-03-08
Rev: 1
KiCad E.D.A. kicad 7.0.10
Id: 1/3

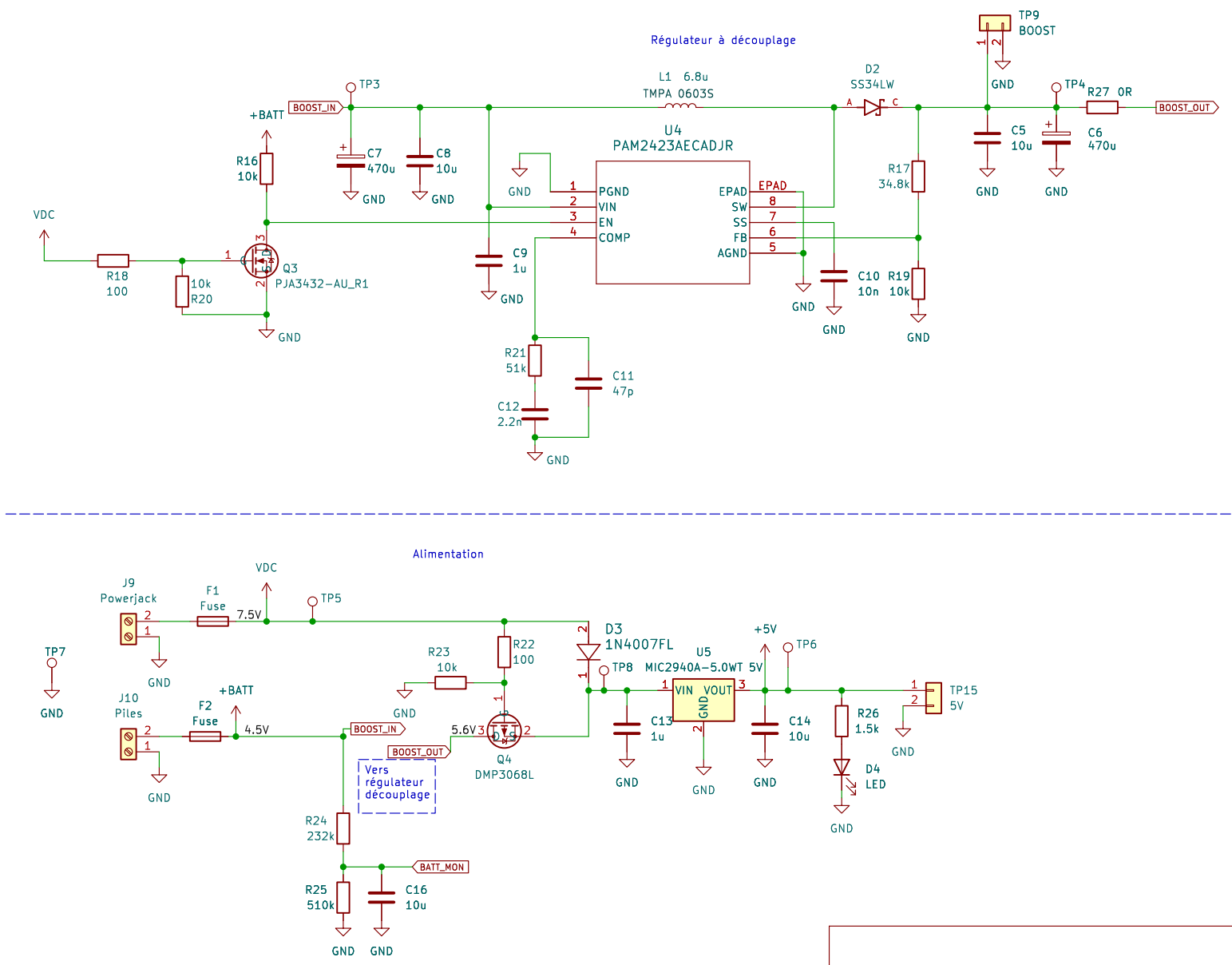

Sheet: /Power/
File: untitled.kicad_sch

Title:

Size: A4	Date:	Rev:
KiCad E.D.A. kicad 7.0.10		Id: 2/3

Sheet: /TP/
File: tp.kicad_sch

Title:

Size: A4	Date:	**Rev:**
KiCad E.D.A. kicad 7.0.10		Id: 3/3