Service Network Design for RTI Transport Optimization

This paper proposes a new mixed integer linear mathematical programming (MILP) model, dubbed as SND-RTI (Service Network Design for Returnable Transport Items), for procurement transport planning in manufacturing supply chains. The model integrates transport decisions while accounting for managing returnable transport items (RTIs). Thus, we optimise the strategic decisions in terms of allocated RTIs, purchased RTIs, direct and return routes and Q-days. The optimisation model aims to minimise transportation and inventory costs. Regarding inventory and transport efficiency, the results of the 3D-SCPTOP model are superior to the company procedures.
Keywords— Procurement, inventory, transport planning, full-truckload, 3D container loading

1 Introduction

2 Literature Review

2.1 Research Gaps & Methodology

3 Problem Statement

Managing returnable transport items (RTIs) in a manufacturing supply chain is, at its core, a closed-loop logistics problem. Raw materials, parts and finished goods flow in one direction, from suppliers to customers, but the RTIs that carry them must flow back. The research question this paper addresses is the effectiveness of a collaborative return strategy of RTIs in a given SC, in which empty RTIs are rerouted and consolidated along the network, analysing economic and environmental costs. To answer this, we propose an optimisation model that determines the optimal return routes for empty RTIs, the shipment frequency on each route, and the minimum RTI pool to prevent production disruptions thereby defining the service network desing for RTIs.

We model the SC as a directed graph $G = (V, E)$, where each node $i \in V$ represents a manufacturing site and each arc $(i, j) \in E$ represents a potential transport route, both for emtpy and full RTIs. Figure 1 illustrates a SC network, where nodes are manufacturing sites and the black arcs represent the daily average flows of full RTIs driven by production demand. Each product family requires a specific RTI type, and the number of RTIs needed per shipment depends on how many raw materials, parts or finished goods fit in a single RTI, as shown in Figure 2.

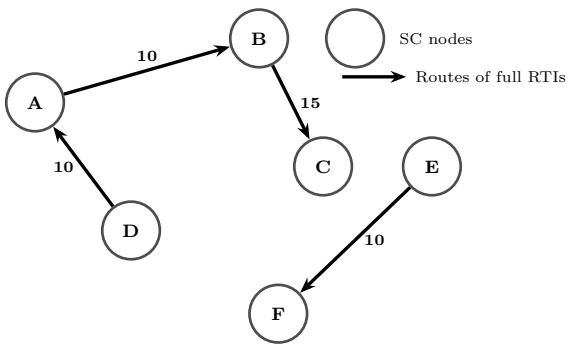

Figure 1: Full RTIs routes

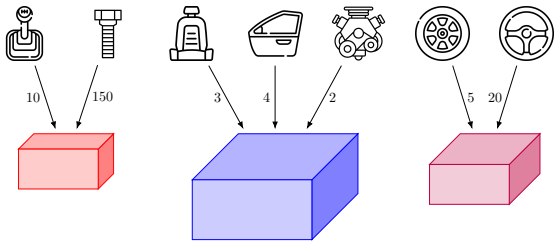

Figure 2: Product quantities per RTI

An RTI exists in one of two states: *full*, when loaded with raw materials, parts and finished goods, or *empty*, once its contents have been consumed at the destination site. Some RTIs can be folded, reducing their volume to decrease transport costs, as shown in Figure 3. The simplest RTI return strategy is a one-to-one relationship, i.e., for every shipment of full RTIs a supplier sends to a customer, the customer must return the empty RTIs along the same route, as depicted in Figure 4. This strategy is operationally straightforward, since each pair of nodes only coordinates with each other. However, it is rarely cost-optimal in large SCs, as it ignores consolidation opportunities along the SC and tends to result in both excessive empty RTIs transport costs and a larger RTI pool than strictly necessary, which implies higher RTI investment and inventory costs.

Figure 3: Full and empty folded RTIs

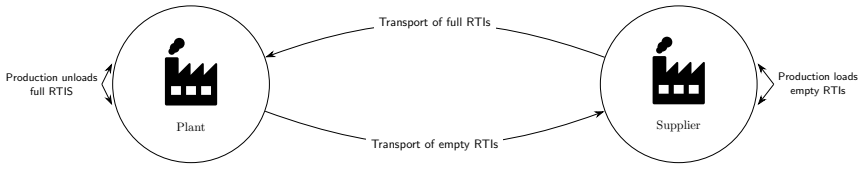

Figure 4: One-to-one RTI return strategy

When a central decision-maker, such as a dominant tier-1 manufacturer, an original equipment manufacturer (OEM) that owns the RTI pool, or a SC platform acting as manufacturing as a service (MaaS) Add reference, has visibility over the entire network, a collaborative RTI return strategy becomes possible. Rather than using a one-to-one RTI return strategy, the model optimises empty RTI routes, reducing the total distance an empty RTI journeys and consolidating routes. This simultaneously diminishes RTI return costs and the overall RTI pool size. Figure 5a shows the one-to-one baseline, while Figure 5b illustrates how an optimised collaborative strategy reduces RTI return transport costs on the same network. Determining the service network design is the primary objective of this research.

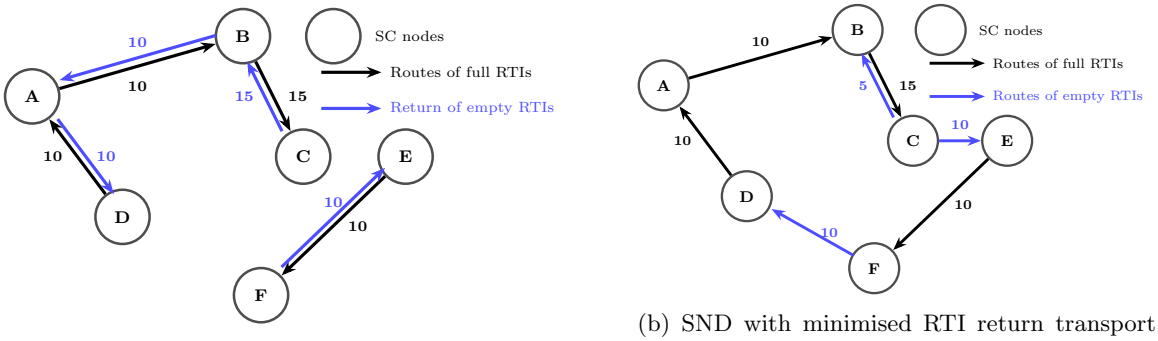

(a) *One-to-one* relationship

(b) SND with minimised RTI return transport cost

Figure 5: SND with minimized RTI return transport cost

On certain routes, full RTIs are accompanied by protective accessories, such as nets or lids, that secure parts during transit. These *inlays* are themselves reusable and must be returned to the origin site after unloading. Here the FTL and less than load (LTL), also known as groupage, transport modes are addressed.

Given the daily average flows of full RTIs along the network, established previously by production plans within manufacturing sites, the problem to address is related to the total number of RTIs needed in the whole SC, the empty routes of RTIs or even the type of full RTI to transport items. The aim is to determine:

1. Routes for empty RTI and inlay return flows.
2. The shipment frequency per route, expressed as a *queue time* (Q-day), i.e. the number of days between consecutive dispatches.
3. the transport mode on each route, i.e. Full-Truck-Load
4. the total number of RTIs needed; and
5. whether additional RTIs must be purchased to meet network requirements, accounting for safety stocks and a uniform maintenance loss factor γ.

The model pursues two objectives: minimising total daily cost, comprising transport costs for both full and empty flows and the inventory holding cost of the RTI pool, and minimising CO_2 emissions from transport as a secondary criterion in a bi-objective.

The model operates at a strategic-tactical level, using daily averages of RTI flows rather than an explicit multi-period horizon. This is a deliberate modelling choice, and its validity merits justification.

In practice, the daily avarage flow of full RTIs between nodes is governed by medium-to-long-term production contracts and procurement agreements, which change infrequently. The Q-days and transport modes are likewise set with a medium-to-long-term frequency rather than renegotiated day by day or week by week. By optimizing strategic-tactical decisions, instead of multi-horizon decions, the model is computationally tractable even for large industrial networks, where a fully operational day-by-day optimisation would be intractable. The strategic-tactical model thus provides a rigorous, scalable upper bound on the achievable savings from collaborative RTI management, which can subsequently serve as a benchmark and input for operational-level planning.

Given:

- Flow of full RTIs across the supply chain.
- Safety Stocks of the supply chain nodes.
- Economic and environmental Transport Costs across the supply chain.

To determine:

- Transport decisions, including routes and method of transport.
- Number of RTIs needed in the network.

KPIs: One to One comparison.

4 Mathematical Model

Table 1: Model nomenclature

Indices and Sets	
V	Set of nodes representing manufacturing plants; $i, j \in V$
E	Set of directed edges representing potential transport routes; $E = V \times V$
Parameters	
μ_{ij}	Daily average demand on route (i, j), expressed in RTI units
ric_{ij}	Fraction of full shipments on route (i, j) that require a return inlay
c_{ij}	Transport cost per unit volume on route (i, j)
f_{ij}	Fixed dispatch cost per shipment on route (i, j)
$v^f,\ v^e$	Volume occupied by one full and one empty RTI, respectively
l_{ij}	Transit time on route (i, j), in days
$q^{\min},\ q^{\max}$	Minimum and maximum queue time, in days
$\alpha^f,\ \alpha^e$	Maintenance loss factor applied to full and empty RTIs, respectively
$ssf^i_{ij},\ ssf^j_{ij}$	Safety stock of full RTIs held at the origin and destination node of route (i, j), respectively
$sse^i_{ij},\ sse^j_{ij}$	Safety stock of empty RTIs held at the origin and destination node of route (i, j), respectively
$\omega_{ij},\ \delta_{ij}$	Minimum and maximum shipment volume on route (i, j)
s^{RTI}	Initial pool of RTIs available before optimisation
p^{RTI}	Unit purchase cost of one RTI
M	Sufficiently large constant (big-M)
Decision Variables	
Binary variables	
$X_{ij},\ XF_{ij},\ XI_{ij},\ XE_{ij}$	Equal to 1 if route (i, j) carries any RTIs, full RTIs, return inlays, or empty RTIs, respectively; 0 otherwise
Daily flow variables	
$N_{ij},\ NF_{ij},\ NI_{ij},\ NE_{ij}$	Daily average number of RTIs, full RTIs, return inlays, and empty RTIs on route (i, j), respectively
Per-shipment variables	
q_{ij}	Queue time on route (i, j): days between consecutive dispatches;
$NS_{ij},\ NSF_{ij},\ NSI_{ij},\ NSE_{ij}$	Total number of RTIs, full RTIs, return inlays, and empty RTIs per shipment on route (i, j), respectively
$VS_{ij},\ VSF_{ij},\ VSI_{ij},\ VSE_{ij}$	Total volume, full RTI volume, return inlay volume, and empty RTI volume per shipment on route (i, j), respectively
RTI pool variables	
$TNC_{ij},\ TNCF_{ij},\ TNCE_{ij},\ TNCI_{ij}$	Total RTIs, full RTIs, empty RTIs, and inlay RTIs allocated to route (i, j), accounting for queue stock, in-transit stock, safety stock, and losses
P	Additional RTIs to purchase; $P \geq 0$
Cost variables	
TCS_{ij}	Transport cost per shipment on route (i, j)
TC_{ij}	Daily transport cost on route (i, j)

Objective function. Minimise total daily transport cost across all routes, plus the amortised purchase cost of any additional RTIs required:

$$\min \quad \sum_{i,j \in V} TC_{ij} \ + \ p^{\text{RTI}} \cdot P \tag{1}$$

Flow conservation. The closed-loop balance must hold at every node:

$$\sum_{j \in V} \big(NF_{ij} + NI_{ij} + NE_{ij}\big) = \sum_{j \in V} \big(NF_{ji} + NI_{ji} + NE_{ji}\big) \qquad \forall\, i \in V \tag{2}$$

Route activation. A route is active if and only if it carries full, empty, or inlay RTIs:

$$3 \cdot X_{ij} \geq XF_{ij} + XE_{ij} + XI_{ij} \qquad \forall\,(i,j) \in E \tag{3}$$

$$X_{ij} \leq XF_{ij} + XE_{ij} + XI_{ij} \qquad \forall\,(i,j) \in E \tag{4}$$

Full Routes activation A route carries full RTIs only if average daily demand is positive:

$$\mu_{ij} \geq XF_{ij} \qquad \forall\,(i,j) \in E \tag{5}$$

Full RTIs route flow The daily full-RTI flow on route (i,j) equals demand if and only if the route is active:

$$NF_{ij} = \mu_{ij} \cdot X_{ij} \qquad \forall\,(i,j) \in E \tag{6}$$

Inlay return flows. Return inlays are sent back on the reverse route in proportion to the full shipments that required them:

$$NI_{ji} = ric_{ij} \cdot \mu_{ij} \cdot X_{ij} \qquad \forall\,(i,j) \in E \tag{7}$$

Flow–binary consistency. Each binary is active if and only if the corresponding daily flow is positive:

$$NF_{ij} \leq M \cdot XF_{ij}, \quad XF_{ij} \leq NF_{ij} \qquad \forall\,(i,j) \in E \tag{8}$$

$$NI_{ij} \leq M \cdot XI_{ij}, \quad XI_{ij} \leq NI_{ij} \qquad \forall\,(i,j) \in E \tag{9}$$

$$NE_{ij} \leq M \cdot XE_{ij}, \quad XE_{ij} \leq NE_{ij} \qquad \forall\,(i,j) \in E \tag{10}$$

Per-shipment RTI counts. RTIs accumulated between dispatches are proportional to the queue time. These are *nonlinear* and will be linearised in Section **??**:

$$NSF_{ij} = NF_{ij} \cdot q_{ij} \qquad \forall\,(i,j) \in E \tag{11}$$

$$NSI_{ij} = NI_{ij} \cdot q_{ij} \qquad \forall\,(i,j) \in E \tag{12}$$

$$NSE_{ij} = NE_{ij} \cdot q_{ij} \qquad \forall\,(i,j) \in E \tag{13}$$

$$NS_{ij} = NSF_{ij} + NSI_{ij} + NSE_{ij} \qquad \forall\,(i,j) \in E \tag{14}$$

Per-shipment volumes. Full and inlay RTIs occupy volume v^f; empty RTIs occupy v^e:

$$VSF_{ij} = NF_{ij} \cdot v^f \cdot q_{ij} \qquad \forall\,(i,j) \in E \tag{15}$$

$$VSI_{ij} = NI_{ij} \cdot v^f \cdot q_{ij} \qquad \forall\,(i,j) \in E \tag{16}$$

$$VSE_{ij} = NE_{ij} \cdot v^e \cdot q_{ij} \qquad \forall\,(i,j) \in E \tag{17}$$

$$VS_{ij} = VSF_{ij} + VSI_{ij} + VSE_{ij} \qquad \forall\,(i,j) \in E \tag{18}$$

Queue time bounds. The queue time is bounded and only meaningful when the route is active:

$$q^{\min} \cdot X_{ij} \;\leq\; q_{ij} \;\leq\; q^{\max} \cdot X_{ij} \qquad \forall\,(i,j) \in E \tag{19}$$

Shipment volume bounds. Each active route must respect a minimum load and a maximum vehicle capacity:

$$\omega_{ij} \cdot X_{ij} \;\leq\; VS_{ij} \;\leq\; \delta_{ij} \cdot X_{ij} \qquad \forall\,(i,j) \in E \tag{20}$$

Total RTI pool requirements. The RTIs allocated to each route cover queue stock, in-transit stock, safety stock at both endpoints, and a maintenance loss margin:

$$TNCF_{ij} = (1+\alpha^f)\Big(NSF_{ij} + l_{ij} \cdot NF_{ij} + XF_{ij}\big(ssf^i_{ij} + ssf^j_{ij}\big)\Big) \qquad \forall\,(i,j) \in E \tag{21}$$

$$TNCE_{ij} = (1+\alpha^e)\Big(NSE_{ij} + l_{ij} \cdot NE_{ij} + XE_{ij}\big(sse^i_{ij} + sse^j_{ij}\big)\Big) \qquad \forall\,(i,j) \in E \tag{22}$$

$$TNCI_{ij} = (1+\alpha^f)(NSI_{ij} + l_{ij} \cdot NI_{ij}) \qquad \forall\,(i,j) \in E \tag{23}$$

$$TNC_{ij} = TNCF_{ij} + TNCE_{ij} + TNCI_{ij} \qquad \forall\,(i,j) \in E \tag{24}$$

RTI purchase. The network purchases any shortfall between the total pool requirement and the existing stock:

$$\sum_{(i,j)\in E} TNC_{ij} \leq s^{\mathrm{RTI}} + P, \qquad P \geq 0 \tag{25}$$

Daily transport costs. The per-shipment cost combines a volumetric charge and a fixed dispatch cost. Dividing by the queue time converts it to a daily equivalent; this division is *nonlinear* and will be linearised in Section **??**:

$$TCS_{ij} = VS_{ij} \cdot c_{ij} + X_{ij} \cdot f_{ij} \qquad \forall\,(i,j) \in E \tag{26}$$

$$TC_{ij} \cdot q_{ij} = TCS_{ij} \qquad \forall\,(i,j) \in E \tag{27}$$

4.1 Model variations

The model presented above can be expanded to take into account different considerations. We introduce the following convention to reduce the notation overhaul.

Convention 1 (Index suppression and aggregation from the root variable).
Every variable in the model is defined with a given root indices. For example, variable ϕ, is defined with the following indices ($c \in C, i \in V, j \in V, m \in \mathcal{M}$); we call this the **root variable**. Writing a variable with fewer indices always denotes a *derived variables*: one or more indices have been suppressed and the root values aggregated according to the rules below.

Rule 1 (Sum aggregation).
Dropping any indeces from any variable ϕ stands for the sum of the root variables over every value of those indices:

$$\phi_{cij} \coloneqq \sum_{m\in\mathcal{M}} \phi_{cijm}, \qquad \phi_{ijm} \coloneqq \sum_{c\in C} \phi_{cijm}, \qquad \phi \coloneqq \sum_{c\in C}\sum_{i\in V}\sum_{j\in V}\sum_{m\in\mathcal{M}} \phi_{cijm}.$$

For continuous and integer variables this is the natural interpretation. For binary variables the result is an *integer count* of how many root-level binaries in the group equal 1; it is not itself binary. For example, $X_{cij} \coloneqq \sum_{m\in\mathcal{M}} X_{cijm}$ counts how many modes are active for type c on lane (i,j) and takes values in $\{0, 1, \ldots, |\mathcal{M}|\}$. The sum aggreagtion can be considered a shorthand notation, since we do not need to create new variables in the solver. We can also create derived ϕ variable to the model and the associated constraint.:while

Rule 2 (Dot notation for the node-pair (i,j)).
The root variable carries two active indices from the same set V. Suppressing one while keeping the other would be ambiguous, so a dot ($\cdot$) marks the suppressed position explicitly:

$$\phi_{c\cdot jm} \coloneqq \sum_{i\in V} \phi_{cijm}, \qquad \phi_{ci\cdot m} \coloneqq \sum_{j\in V} \phi_{cijm}.$$

The dot is only ever needed for the origin/destination pair, as no other pair of active indices belongs to the same set. Rule 1 applies as normal: the result is a sum, and for binary variables it is an integer count.

Rule 3 (OR-aggregated binaries).
We can also aggregate binary variables to denote an OR aggreagtion. Then, a new binary decision variable is introduced, denoted with an overline ($\overline{X}$). This variable is not a notational shorthand: it must be declared in the solver and its relationship to the root-level binaries enforced by an explicit big-M pair, or boolean imposition. Crucially, the pair is written directly in terms of the sum aggregate defined by Rule 1, so the sum-shorthand appears in the constraints themselves.

Suppressing the mode index m yields the new binary $\overline{X}_{cij}$, linked to the sum aggregate $X_{cij} = \sum_{m\in\mathcal{M}} X_{cijm}$ by:

$$\overline{X}_{cij} \leq X_{cij} \qquad \forall\,(i,j) \in E,\ c \in C \tag{28}$$

$$X_{cij} \leq |M| \cdot \overline{X}_{cij} \qquad \forall\,(i,j) \in E,\ c \in C \tag{29}$$

Constraint (28) forces $\overline{X}_{cij}$ to 0 when the count X_{cij} is 0 (no mode active). Constraint (29) forces $\overline{X}_{cij}$ to 1 when the count is positive (at least one mode active). Together they enforce $\overline{X}_{cij} = 1 \iff X_{cij} \geq 1$.

Rule 4 (At Least One)

We can also aggregate binary variables to denote an At Least One (ALO) aggreagtion. Then, a new binary decision variable is introduced, denoted with an overline $\overline{X}_{cij}$. We also need to

$$X_{cij} = 1 \qquad \forall\,(i,j) \in E \tag{30}$$

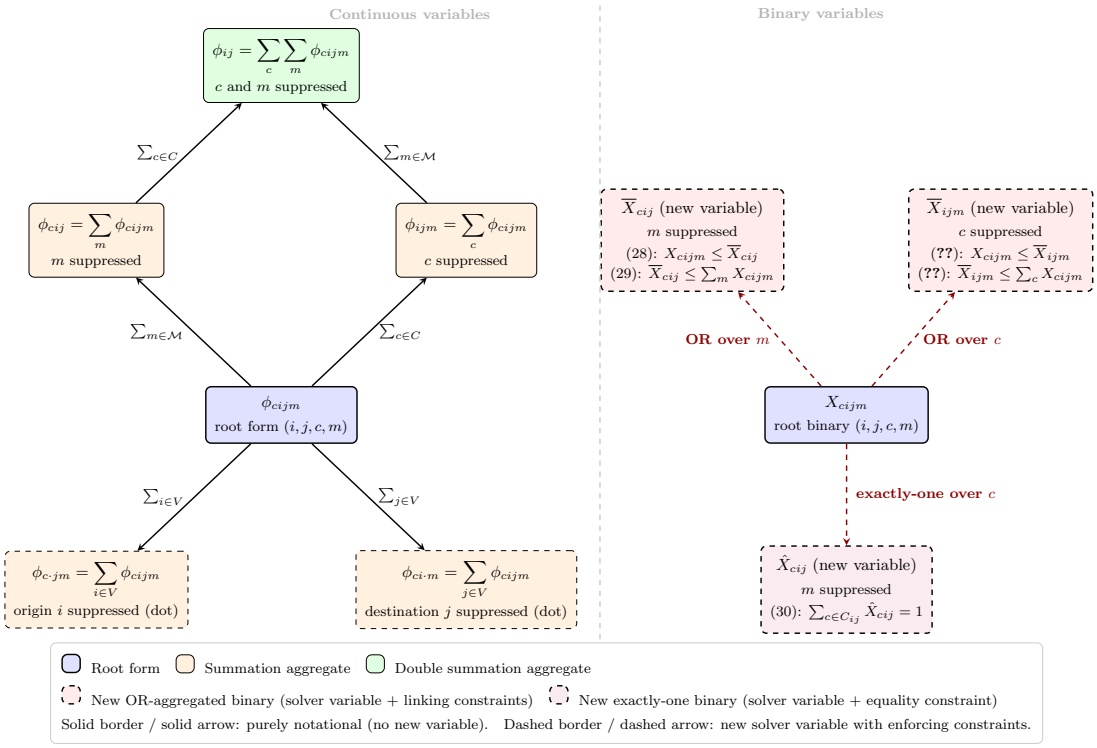

Figure 6: Derivation lattice for a generic variable ϕ (left panel, continuous or integer) and its binary counterpart X (right panel), separated by the dashed vertical rule. On the left, every arrow represents a sum aggregation (Rule 1–2): purely notational, no new variable introduced. On the right, solid arrows represent the same sum aggregation applied to binary variables, producing an integer count. Dashed arrows introduce a genuinely new solver variable (dashed border): the OR aggregate $\overline{X}$ (Rule 3), defined as a binary proxy for whether the count is positive, enforced by the big-M pair shown in each node. The hat variant $\hat{X}$ (Rule 4) is the same variable as $\overline{X}_{cij}$ with the additional constraint (30) in force.