age@last11

Service Network Design for RTI Transport Optimization

This paper proposes a new mixed integer linear mathematical programming (MILP) model, dubbed as SND-RTI (Service Network Design for Returnable Transport Items), for procurement transport planning in manufacturing supply chains. The model integrates transport decisions while accounting for managing returnable transport items (RTIs). Thus, we optimise the strategic decisions in terms of allocated RTIs, purchased RTIs, direct and return routes and Q-days. The optimisation model aims to minimise transportation and inventory costs. Regarding inventory and transport efficiency, the results of the 3D-SCPTOP model are superior to the company procedures.
Keywords— Procurement, inventory, transport planning, full-truckload, 3D container loading

1 Introduction

2 Literature Review

2.1 Research Gaps & Methodology

3 Problem Statement

Managing returnable transport items (RTIs) in a manufacturing supply chain is, at its core, a closed-loop logistics problem. Raw materials, parts and finished goods flow in one direction, from suppliers to customers, but the RTIs that carry them must flow back. The research question this paper addresses is the effectiveness of a collaborative return strategy of RTIs in a given SC, in which empty RTIs are rerouted and consolidated along the network, analysing economic and environmental costs. To answer this, we propose an optimisation model that determines the optimal return routes for empty RTIs, the shipment frequency on each route, and the minimum RTI pool to prevent production disruptions thereby defining the service network desing for RTIs.

We model the SC as a directed graph $G = (V, E)$, where each node $i \in V$ represents a manufacturing site and each arc $(i, j) \in E$ represents a potential transport route, both for emtpy and full RTIs. Figure 1 illustrates a SC network, where nodes are manufacturing sites and the black arcs represent the daily average flows of full RTIs driven by production demand. Each product family requires a specific RTI type, and the number of RTIs needed per shipment depends on how many raw materials, parts or finished goods fit in a single RTI, as shown in Figure 2.

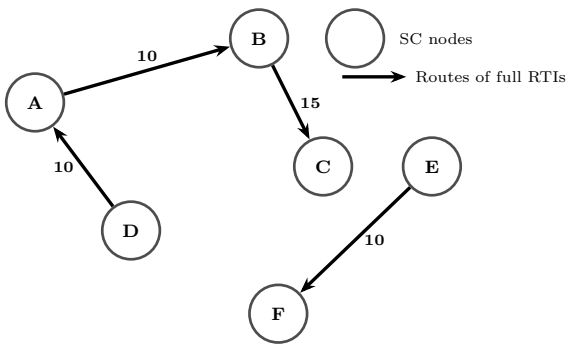

Figure 1: Full RTIs routes

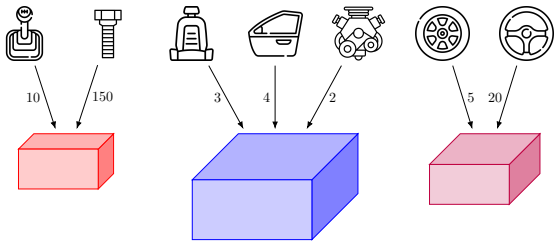

Figure 2: Product quantities per RTI

An RTI exists in one of two states: *full*, when loaded with raw materials, parts and finished goods, or *empty*, once its contents have been consumed at the destination site. Some RTIs can be folded, reducing their volume to decrease transport costs, as shown in Figure 3. The simplest RTI return strategy is a one-to-one relationship, i.e., for every shipment of full RTIs a supplier sends to a customer, the customer must return the empty RTIs along the same route, as depicted in Figure 4. This strategy is operationally straightforward, since each pair of nodes only coordinates with each other. However, it is rarely cost-optimal in large SCs, as it ignores consolidation opportunities along the SC and tends to result in both excessive empty RTIs transport costs and a larger RTI pool than strictly necessary, which implies higher RTI investment and inventory costs.

Figure 3: Full and empty folded RTIs

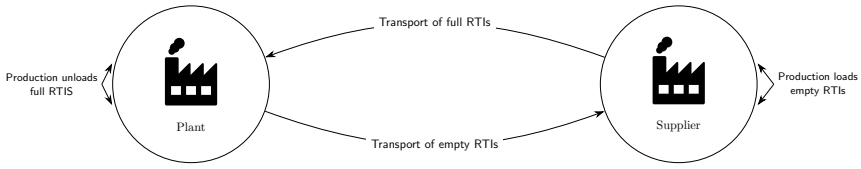

Figure 4: One-to-one RTI return strategy

When a central decision-maker, such as a dominant tier-1 manufacturer, an original equipment manufacturer (OEM) that owns the RTI pool, or a SC platform acting as manufacturing as a service (MaaS) Add reference, has visibility over the entire network, a collaborative RTI return strategy becomes possible. Rather than using a one-to-one RTI return strategy, the model optimises empty RTI routes, reducing the total distance an empty RTI journeys and consolidating routes. This simultaneously diminishes RTI return costs and the overall RTI pool size. Figure 5a shows the one-to-one baseline, while Figure 5b illustrates how an optimised collaborative strategy reduces RTI return transport costs on the same network. Determining the service network design is the primary objective of this research.

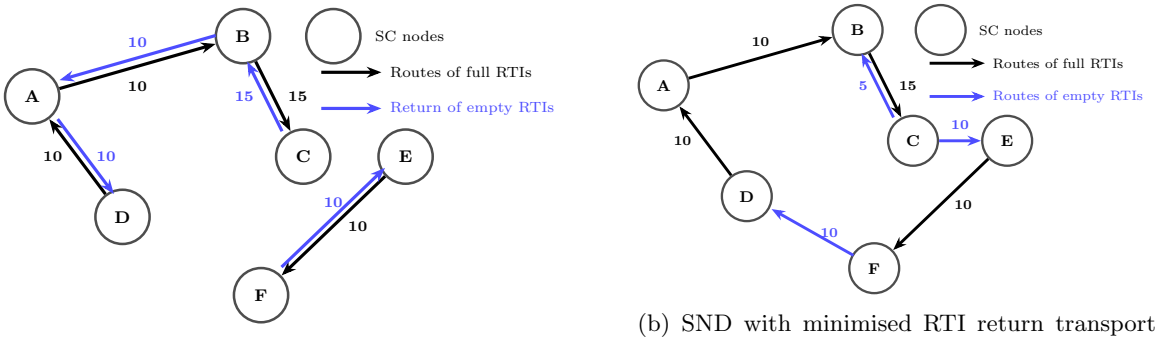

(a) *One-to-one* relationship

(b) SND with minimised RTI return transport cost

Figure 5: SND with minimised RTI return transport cost

On certain routes, full RTIs are accompanied by protective accessories, such as nets or lids, that secure parts during transit. These *inlays* are themselves reusable and must be returned to the origin site after unloading. Here the FTL and LTL, also known as groupage, transport modes are addressed.

The model takes as input the average daily flows of full RTIs between nodes, derived from production plans over a decision horizon chosen by the decision-maker — typically a month, quarter, or year. These averages are assumed to be representative of the period, meaning that demand is sufficiently stable across days for the average to serve as a reliable planning input, without extreme imbalances that would render it misleading. Under this assumption, the model determines a static service network design:

1. Routes for empty RTI and inlay return flows.
2. The shipment frequency per route, expressed as a *queue time* (Q-day), i.e. the number of days between consecutive dispatches.
3. The transport mode per route, i.e. FTL or LTL.
4. The total number of RTIs needed.

Operational-level planning, such as the scheduling of individual shipments or the production decisions of each plant, is outside the scope of this problem.

The problem consists of finding the tradeoff among daily RTI transport cost, which include transport costs for both full and empty RTIs; the inventory holding cost of the RTI pool; and CO_2 emissions from RTI transport.

The problem encompasses a strategic-tactical decision level, using as input data the daily averages of RTI demand flows. In practice, the daily avarage flow of full RTIs between nodes is governed by medium-to-long-term production contracts and procurement agreements, which change infrequently. The Q-days and transport modes are likewise set with a medium-to-long-term frequency rather than renegotiated day by day or week by week. By optimizing strategic-tactical decisions, instead of multi-horizon decions, the model is computationally tractable even for large industrial networks, where a fully operational day-by-day optimisation would be intractable. The strategic-tactical model thus provides a rigorous, scalable upper bound on the achievable savings from collaborative RTI management, which can subsequently serve as a benchmark and input for operational-level planning.

Given:

- Flow of full RTIs across the supply chain.
- Safety Stocks of the supply chain nodes.
- Economic and environmental Transport Costs across the supply chain.

To determine:

- Transport decisions, including routes and method of transport.
- Number of RTIs needed in the network.

KPIs: One to One comparison.

4 Mathematical Model

Table 1: Model nomenclature

Indices and Sets	
V	Set of nodes representing manufacturing plants; $i, j \in V$
E	Set of directed edges representing potential transport routes; $E = V \times V$
Parameters	
μ_{ij}	Daily average demand on route (i, j), expressed in RTI units
ric_{ij}	Fraction of full shipments on route (i, j) that require a return inlay
$bf_{ij}, bi_{ij}, be_{ij}$	Binary parameter indicating full RTI, return inlay RTIs, and empty RTI can traverse route (i, j), respectively
c_{ij}	Transport cost per unit volume on route (i, j)
f_{ij}	Fixed dispatch cost per shipment on route (i, j)
$v^f,\ v^e$	Volume occupied by one full and one empty RTI, respectively
l_{ij}	Transit time on route (i, j), in days
$q^{\min},\ q^{\max}$	Minimum and maximum queue time, in days
$\alpha^f,\ \alpha^e$	Maintenance loss factor applied to full and empty RTIs, respectively
$ssf^i_{ij},\ ssf^j_{ij}$	Safety stock of full RTIs held at the origin and destination node of route (i, j), respectively
$sse^i_{ij},\ sse^j_{ij}$	Safety stock of empty RTIs held at the origin and destination node of route (i, j), respectively
$\omega_{ij},\ \delta_{ij}$	Minimum and maximum shipment volume on route (i, j)
s^{RTI}	Initial pool of RTIs available before optimisation
p^{RTI}	Unit purchase cost of one RTI
M	Sufficiently large constant (big-M)
Decision Variables	
Binary variables	
$X_{ij},\ XF_{ij},\ XI_{ij},\ XE_{ij}$	Equal to 1 if route (i, j) carries any RTIs, full RTIs, return inlays, or empty RTIs, respectively; 0 otherwise
Daily flow variables	
$N_{ij},\ NF_{ij},\ NI_{ij},\ NE_{ij}$	Daily average number of RTIs, full RTIs, return inlays, and empty RTIs on route (i, j), respectively
$V_{ij},\ VF_{ij},\ VI_{ij},\ VE_{ij}$	Daily average volume of RTIs, full RTIs, return inlays, and empty RTIs on route (i, j), respectively
Per-shipment variables	
q_{ij}	Queue time on route (i, j): days between consecutive dispatches;
$NS_{ij},\ NSF_{ij},\ NSI_{ij},\ NSE_{ij}$	Total number of RTIs, full RTIs, return inlays, and empty RTIs per shipment on route (i, j), respectively
$VS_{ij},\ VSF_{ij},\ VSI_{ij},\ VSE_{ij}$	Total volume, full RTI volume, return inlay volume, and empty RTI volume per shipment on route (i, j), respectively
RTI pool variables	
$TNC_{ij},\ TNCF_{ij},\ TNCE_{ij}, TNCI_{ij}$	Total RTIs, full RTIs, empty RTIs, and inlay RTIs allocated to route (i, j), accounting for queue stock, in-transit stock, safety stock, and losses
P	Additional RTIs to purchase; $P \geq 0$
Cost variables	
TCS_{ij}	Transport cost per shipment on route (i, j)
TC_{ij}	Daily transport cost on route (i, j)

Objective function. Minimise total daily transport cost across all routes, plus the amortised purchase cost of any additional RTIs required:

$$\min \quad \sum_{i,j \in V} TC_{ij} \ + \ p^{\text{RTI}} \cdot P \tag{1}$$

Flow conservation. The closed-loop balance must hold at every node:

$$\sum_{j \in V} \big(NF_{ij} + NI_{ij} + NE_{ij}\big) = \sum_{j \in V} \big(NF_{ji} + NI_{ji} + NE_{ji}\big) \qquad \forall\, i \in V \tag{2}$$

Route activation. A route is active if and only if it carries full, empty, or inlay RTIs:

$$3 \cdot X_{ij} \geq XF_{ij} + XE_{ij} + XI_{ij} \qquad \forall\,(i,j) \in E \tag{3}$$
$$X_{ij} \leq XF_{ij} + XE_{ij} + XI_{ij} \qquad \forall\,(i,j) \in E \tag{4}$$
$$X_{ij} \leq bf_{ij} + be_{ij} + bi_{ij} \qquad \forall\,(i,j) \in E \tag{5}$$

Full Routes activation A route carries full RTIs only if average daily demand is positive:

$$XF_{ij} = bf_{ij} \qquad \forall\,(i,j) \in E \tag{6}$$

Full RTIs route flow The daily full-RTI flow on route (i,j) equals demand if and only if the route is active:

$$NF_{ij} = \mu_{ij} \cdot X_{ij} \qquad \forall\,(i,j) \in E \tag{7}$$

Inlay return flows. Return inlays are sent back on the reverse route in proportion to the full shipments that required them:

$$NI_{ji} = ric_{ij} \cdot \mu_{ij} \cdot X_{ij} \qquad \forall\,(i,j) \in E \tag{8}$$

Flow–binary consistency. Each binary is active if and only if the corresponding daily flow is positive:

$$NF_{ij} \leq M \cdot XF_{ij}, \quad XF_{ij} \leq NF_{ij} \qquad \forall\,(i,j) \in E \tag{9}$$
$$NI_{ij} \leq M \cdot XI_{ij}, \quad XI_{ij} \leq NI_{ij} \qquad \forall\,(i,j) \in E \tag{10}$$
$$NE_{ij} \leq M \cdot XE_{ij}, \quad XE_{ij} \leq NE_{ij} \qquad \forall\,(i,j) \in E \tag{11}$$

Daily average volumes. Full and inlay RTIs occupy volume v^f; empty RTIs occupy v^e:

$$VF_{ij} = NF_{ij} \cdot v^f \qquad \forall\,(i,j) \in E \tag{12}$$
$$VI_{ij} = NI_{ij} \cdot v^f \qquad \forall\,(i,j) \in E \tag{13}$$
$$VE_{ij} = NE_{ij} \cdot v^e \qquad \forall\,(i,j) \in E \tag{14}$$
$$V_{ij} = VF_{ij} + VI_{ij} + VE_{ij} \qquad \forall\,(i,j) \in E \tag{15}$$

Per-shipment RTI counts. RTIs accumulated between dispatches are proportional to the queue time. These are *nonlinear* and will be linearised in Section **??**:

$$NSF_{ij} = NF_{ij} \cdot q_{ij} \qquad \forall\,(i,j) \in E \tag{16}$$
$$NSI_{ij} = NI_{ij} \cdot q_{ij} \qquad \forall\,(i,j) \in E \tag{17}$$
$$NSE_{ij} = NE_{ij} \cdot q_{ij} \qquad \forall\,(i,j) \in E \tag{18}$$
$$NS_{ij} = NSF_{ij} + NSI_{ij} + NSE_{ij} \qquad \forall\,(i,j) \in E \tag{19}$$

Per-shipment volumes. Full and inlay RTIs occupy volume v^f; empty RTIs occupy v^e:

$$VSF_{ij} = VF_{ij} \cdot q_{ij} \qquad \forall\,(i,j) \in E \tag{20}$$
$$VSI_{ij} = VI_{ij} \cdot q_{ij} \qquad \forall\,(i,j) \in E \tag{21}$$
$$VSE_{ij} = VE_{ij} \cdot q_{ij} \qquad \forall\,(i,j) \in E \tag{22}$$
$$VS_{ij} = VSF_{ij} + VSI_{ij} + VSE_{ij} \qquad \forall\,(i,j) \in E \tag{23}$$

Queue time bounds. The queue time is bounded and only meaningful when the route is active:

$$q^{\min} \cdot X_{ij} \;\leq\; q_{ij} \;\leq\; q^{\max} \cdot X_{ij} \qquad \forall\,(i,j) \in E \tag{24}$$

Shipment volume bounds. Each active route must respect a minimum load and a maximum vehicle capacity:

$$\omega_{ij} \cdot X_{ij} \;\leq\; VS_{ij} \;\leq\; \delta_{ij} \cdot X_{ij} \qquad \forall\,(i,j) \in E \tag{25}$$

Total RTI pool requirements. The RTIs allocated to each route cover queue stock, in-transit stock, safety stock at both endpoints, and a maintenance loss margin:

$$TNCF_{ij} = (1+\alpha^f)\Big(NSF_{ij} + l_{ij} \cdot NF_{ij} + XF_{ij}\big(ssf^i_{ij} + ssf^j_{ij}\big)\Big) \qquad \forall\,(i,j) \in E \tag{26}$$

$$TNCE_{ij} = (1+\alpha^e)\Big(NSE_{ij} + l_{ij} \cdot NE_{ij} + XE_{ij}\big(sse^i_{ij} + sse^j_{ij}\big)\Big) \qquad \forall\,(i,j) \in E \tag{27}$$

$$TNCI_{ij} = (1+\alpha^f)(NSI_{ij} + l_{ij} \cdot NI_{ij}) \qquad \forall\,(i,j) \in E \tag{28}$$

$$TNC_{ij} = TNCF_{ij} + TNCE_{ij} + TNCI_{ij} \qquad \forall\,(i,j) \in E \tag{29}$$

RTI purchase. The network purchases any shortfall between the total pool requirement and the existing stock:

$$\sum_{(i,j)\in E} TNC_{ij} \leq s^{\mathrm{RTI}} + P, \qquad P \geq 0 \tag{30}$$

Daily transport costs. The per-shipment cost combines a volumetric charge and a fixed dispatch cost. Dividing by the queue time converts it to a daily equivalent; this division is *nonlinear* and will be linearised in Section **??**:

$$TCS_{ij} = VS_{ij} \cdot c_{ij} + X_{ij} \cdot f_{ij} \qquad \forall\,(i,j) \in E \tag{31}$$

$$TC_{ij} \cdot q_{ij} = TCS_{ij} \qquad \forall\,(i,j) \in E \tag{32}$$

4.1 Model variations

The model presented above can be expanded to take into account different considerations. We introduce the following convention to reduce the notation overhaul.

Convention 1 (Index suppression and aggregation from the root variable).
Every variable in the model is defined with a set of **root indices**. For example, the variable ϕ_{cijm} is defined for $(c \in C, i \in V, j \in V, m \in \mathcal{M})$; we call this the **root variable**. Writing a variable with fewer indices always denotes a **derived variable**: one or more indices have been suppressed and the root values aggregated according to the rules below.

Rule 1 (Sum aggregation). Dropping indices from any variable denotes the sum of the root variable over every value of those indices:

$$\phi_{cij} \coloneqq \sum_{m\in\mathcal{M}} \phi_{cijm}, \qquad \phi_{ijm} \coloneqq \sum_{c\in C} \phi_{cijm}, \qquad \phi \coloneqq \sum_{c\in C}\sum_{i\in V}\sum_{j\in V}\sum_{m\in\mathcal{M}} \phi_{cijm}.$$

For continuous and integer variables, this is the natural interpretation. For binary variables, the result is an *integer count* of how many root-level binaries in the group equal 1; it is not itself binary. For example, $X_{cij} \coloneqq \sum_{m\in\mathcal{M}} X_{cijm}$ counts active modes for type c on lane (i,j) and takes values in $\{0,1,\ldots,|\mathcal{M}|\}$.

Sum aggregation is primarily a notational shorthand. However, we can also explicitly introduce derived variables to the model (e.g., ϕ_{cij}) and define the associated equality constraint:

$$\phi_{cij} = \sum_{m\in\mathcal{M}} \phi_{cijm} \quad \forall c \in C, (i,j) \in E \tag{33}$$

Rule 2 (Dot notation for the node-pair (i,j)). The root variable carries two active indices from the same set V. Suppressing one while keeping the other would be ambiguous, so a dot $(\,\cdot\,)$ marks the suppressed position:

$$\phi_{c\cdot jm} \coloneqq \sum_{i\in V} \phi_{cijm}, \qquad \phi_{ci\cdot m} \coloneqq \sum_{j\in V} \phi_{cijm}.$$

Rule 1 applies as normal: the result is a sum or an integer count.

Rule 3 (OR-aggregated binaries). A new binary decision variable ($\overline{X}$) is introduced to represent a logical *OR*, linked to the sum aggregate X_{cij} via:

$$\overline{X}_{cij} \leq X_{cij} \tag{34}$$

$$X_{cij} \leq |\mathcal{M}| \cdot \overline{X}_{cij} \tag{35}$$

Together, these enforce $\overline{X}_{cij} = 1 \iff X_{cij} \geq 1$.

Rule 4 (At-most-one aggregation). When at most one commodity type may be active on a lane, a new binary $\widehat{X}_{cij}$ is introduced and linked to the sum aggregate X_{cij} by:

$$\widehat{X}_{cij} \leq X_{cij} \tag{36}$$

$$X_{cij} \leq \cdot \widehat{X}_{cij} \tag{37}$$

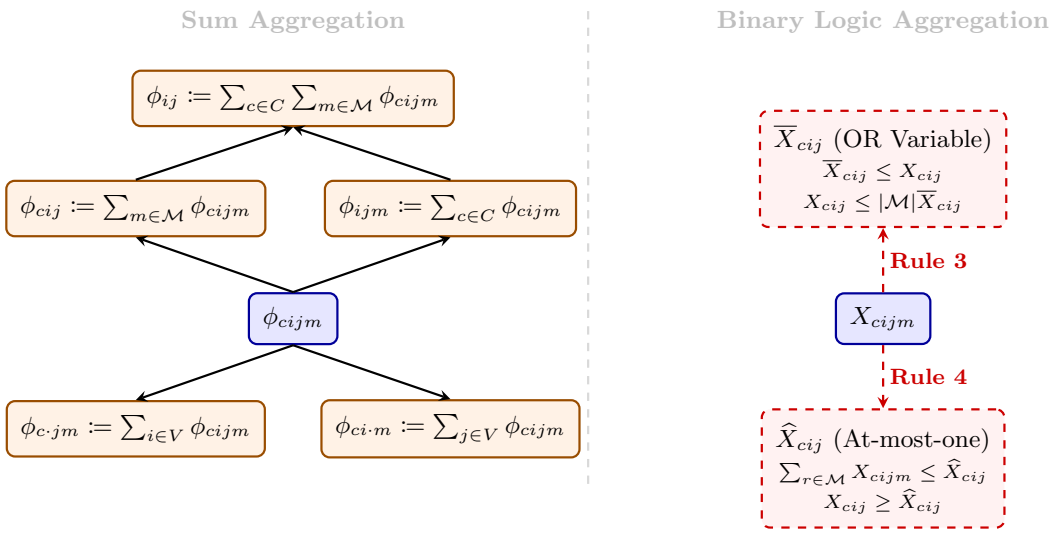

Figure 6: Derivation lattice: Sum Aggregation (left) and Binary Logic Aggregation (right).

5 Model Extensions

The base model can be extended by activating any subset of five independent additions: **M** (transport modes), **R** (RTI types), **H** (hub nodes), **P** (explicit product flows), and **L** (linearisation of the queue-time products). Each extension is self-contained and any combination is valid.

Extensions M, R, H, and P each introduce a new set with its index, replacing the root variables of the model by adding and additional index. Extension L is qualitatively different: it does not add an index to existing variables but instead discretises the continuous queue time q_{ij} over a finite set $\mathcal{Q}_{ij}$ of admissible integer values in order to discritze teh model. The result is a pure MILP formulation with no nonlinear terms.

Each extension operates through two mechanisms.

1. **Index addition or variable introduction.** Table 2 lists, for every symbol, which extensions add an index to the variable or parameter or introduce a new symbol (**New**), either a variable or parameter. Symbols marked $\circ$ in a column are unaffected; symbols marked $\times$ are replaced by derived expressions (Section 5.1).
2. **Constraint transformation.** Table **??** records, for every base constraint, what each active extension does to it. Extensions not listed for a constraint leave it unchanged ($\circ$). Unless specified, a constraint is transformed automatically if a variable is tranformed that appears in the constraint by iterating over the new set, that is if an indexed is added to a variable or parameter.

Table 2: Index promotion and variable introduction map. $+m/+r$: extension adds the indicated index to this symbol. **New**: symbol is introduced by this extension. $\circ$: unaffected. $\times$: replaced by a derived expression. For Ext. L the k subscript ranges over $\mathcal{Q}_{ij}$; if Ext. M is also active, replace (i,j) by (i,j,m) throughout.

Symbol	**Base form**	**M**	**R**	**H**	**P**	**L**
Sets						
$\mathcal{M}$	—	**New**	$\circ$	$\circ$	$\circ$	$\circ$
$R,\ R_{ij}$	—	$\circ$	**New**	$\circ$	$\circ$	$\circ$
$H \subseteq V$	—	$\circ$	$\circ$	**New**	$\circ$	$\circ$
$\mathcal{P},\ \mathcal{P}_r$	—	$\circ$	$\circ$	$\circ$	**New**	$\circ$
$\mathcal{Q}$	—	$\circ$	$\circ$	$\circ$	$\circ$	**New**
Parameters						
μ_{ij}	(i,j)	$\circ$	$+r$	$\circ$	$\times$	$\circ$
ric_{ij}	(i,j)	$\circ$	$+r$	$\circ$	$\circ$	$\circ$
$bf_{ij}, be_{ij}, bi_{ij}$	(i,j)	$\circ$	$+r$	$\circ$	$\times$	$\circ$
c_{ij}	(i,j)	$+m$	$\circ$	$\circ$	$\circ$	$\circ$
f_{ij}	(i,j)	$+m$	$\circ$	$\circ$	$\circ$	$\circ$
$v^f,\ v^e$	scalar	$\circ$	$+r$	$\circ$	$\circ$	$\circ$
$q^{\min},\ q^{\max}$	scalar	$+m$	$\circ$	$\circ$	$\circ$	$\times$
$\omega_{ij},\ \delta_{ij}$	(i,j)	$+m$	$\circ$	$\circ$	$\circ$	$+q$
$ssf,\ sse$	(i,j)	$\circ$	$+r$	$\circ$	$\circ$	$\circ$
$s^{\mathrm{RTI}},\ p^{\mathrm{RTI}}$	scalar	$\circ$	$+r$	$\circ$	$\circ$	$\circ$
$l_{ij},\ \alpha^f,\ \alpha^e$	(i,j)/scalar	$\circ$	$\circ$	$\circ$	$\circ$	$\circ$
d_{pij}	—	$\circ$	$\circ$	$\circ$	**New**	$\circ$
η_{pr}	—	$\circ$	$\circ$	$\circ$	**New**	$\circ$
Binary variables						
$X_{ij},\ XF_{ij},\ XI_{ij},\ XE_{ij}$	(i,j)	$+m$	$+r$	$\circ$	$\circ$	$+q$
XH_i	(i)	$\circ$	$\circ$	**New**	$\circ$	$\circ$
Flow variables						
$NF_{ij},\ NI_{ij},\ NE_{ij}$	(i,j)	$+m$	$+r$	$\circ$	$\circ$	$+q$
q_{ij}	(i,j)	$+m$	$+r$	$\circ$	$\circ$	$\times$
$NS_{ij},\ NSF_{ij},\ NSI_{ij},\ NSE_{ij}$	(i,j)	$+m$	$+r$	$\circ$	$\circ$	$+q$
VH_i	(i)	$\circ$	$\circ$	**New**	$\circ$	$\circ$
CH_i	(i)	$\circ$	$\circ$	**New**	$\circ$	$\circ$
$VS_{ij},\ VSF_{ij},\ VSI_{ij},\ VSE_{ij}$	(i,j)	$+m$	$+r$	$\circ$	$\circ$	$+q$
$TNCF_{ij},\ TNCE_{ij},\ TNCI_{ij}$	(i,j)	$+m$	$+r$	$\circ$	$\circ$	$+q$
P	scalar	$\circ$	$+r$	$\circ$	$\circ$	$\circ$
$TC_{ij},\ TCS_{ij}$	(i,j)	$+m$	$+r$	$\circ$	$\circ$	$+q$

5.1 New Constraints Introduced by Each Extension

Extension M. Only one type of transport mode can for the same route.

$$\overline{X}_{ijm} \leq bm_{ijm} \qquad \forall\,(i,j) \in E \tag{38}$$

Equation 5 is replaced by 39 to enforce only one type of transport mode per route.

$$\widehat{X}_{ij} \leq bf_{ij} + be_{ij} + bi_{ij} \qquad \forall\,(i,j) \in E \tag{39}$$

Extension R. Each route commits to exactly one admissible RTI type (Rule 4); demand and inlay flows are conditioned on the selected type: Equation 6 is replaced by 40 to enforce only different full RTIs types are sent.

$$\overline{XF}_{ijr} = bf_{ijr} \qquad \forall\,(i,j) \in E, r \in R \tag{40}$$

Equation 5 is replaced by 39 to enforce only one type of transport mode per route.

$$\overline{X}_{ij} \leq \sum_{r \in R} bf_{ijr} + be_{ijr} + bi_{ijr} \qquad \forall\,(i,j) \in E \tag{41}$$

Extension H. Hub nodes $i \in H$ are unconstrained. At every non-hub node $i \in V \setminus H$ the incoming and outgoing empty-flow binaries are linked to aggregated flows via Rule 3 and forced mutually exclusive. The index r appears only when Ext. R is also active:

$$\overline{XE}_{\cdot i} + \overline{XE}_{i\cdot} \leq 1 \qquad \forall\, i \in V \setminus H \tag{42}$$

$$XH_i = \overline{X}_{i\cdot} \tag{43}$$

$$VH_i = V_{i\cdot} \tag{44}$$

$$CH_i = fhc_i \cdot XH_i + VH_i \cdot vhc_i \tag{45}$$

CH is to be added to the monetary costs.

Extension P.

$$NF_{ijpr} = \mu_{ijpr} * XF_{ijpr} \tag{46}$$

$$\mu_{ijpr} = \frac{d_{ijp}}{\eta_{pr}} \tag{47}$$

$$\widehat{XF}_{ijp} = bf_{ijp} \qquad \forall\,(i,j) \in E, r \in R \tag{48}$$

Extension L — Linearisation of products of two decision variables. The base model contains three families of terms that are products of two decision variables, all of the form (flow) $\times\, q_{ij}$:

1. $NF_{ij} \cdot q_{ij}$ and $NI_{ij} \cdot q_{ij}$, which involve flows fixed by demand once the route is active.
2. $NE_{ij} \cdot q_{ij}$, which involves a free flow variable.
3. $TC_{ij} \cdot q_{ij}$, which equates per-shipment to daily cost.

Extension L eliminates all three by discretising q_{ij} over the finite set $\mathcal{Q}_{ij} \subset \mathbb{Z}_{>0}$ of admissible queue times. A binary variable $z_{ij,k}$ selects the active queue time value. If Ext. M is also active, the index m is appended everywhere ($z_{ijm,k}$, $\mathcal{Q}_{ijm}$, etc.).

Queue-time discretisation. The queue time is expressed as a weighted sum over admissible integer values and deactivated when the route is idle:

$$q_{ij} = \sum_{k \in \mathcal{Q}_{ij}} k \cdot z_{ij,k} \qquad \forall\,(i,j) \in E \tag{49}$$

$$\sum_{k \in \mathcal{Q}_{ij}} z_{ij,k} = X_{ij} \qquad \forall\,(i,j) \in E \tag{50}$$

Constraint (50) ensures exactly one queue-time value is selected when the route is active and none when it is not. Together (49)–(50) replace the bounds (24).

Linearisation of family 1 (fixed-demand flows). Because $NF_{ij} = \mu_{ij} \cdot X_{ij}$ and (50) implies $X_{ij} \cdot z_{ij,k} = z_{ij,k}$, the products reduce directly to linear expressions without auxiliary variables:

$$NSF_{ij} = \mu_{ij} \sum_{k \in \mathcal{Q}_{ij}} k \cdot z_{ij,k} \qquad \forall\,(i,j) \in E \tag{51}$$

$$NSI_{ij} = ric_{ij} \cdot \mu_{ij} \sum_{k \in \mathcal{Q}_{ij}} k \cdot z_{ij,k} \qquad \forall\,(i,j) \in E \tag{52}$$

Linearisation of family 2 (free empty-RTI flow). Introduce the auxiliary continuous variable $\widetilde{NE}_{ij,k} := NE_{ij} \cdot z_{ij,k}$, linearised by the standard McCormick reformulation for a product of a continuous and a binary variable:

$$\widetilde{NE}_{ij,k} \leq NE_{ij}^{\max} \cdot z_{ij,k} \qquad \forall\,(i,j) \in E,\ k \in \mathcal{Q}_{ij} \tag{53}$$

$$\widetilde{NE}_{ij,k} \leq NE_{ij} \qquad \forall\,(i,j) \in E,\ k \in \mathcal{Q}_{ij} \tag{54}$$

$$\widetilde{NE}_{ij,k} \geq NE_{ij} - NE_{ij}^{\max}(1 - z_{ij,k}) \qquad \forall\,(i,j) \in E,\ k \in \mathcal{Q}_{ij} \tag{55}$$

$$\widetilde{NE}_{ij,k} \geq 0 \qquad \forall\,(i,j) \in E,\ k \in \mathcal{Q}_{ij} \tag{56}$$

where $NE_{ij}^{\max}$ is a valid upper bound on NE_{ij}. The per-shipment count and volume then become:

$$NSE_{ij} = \sum_{k \in \mathcal{Q}_{ij}} k \cdot \widetilde{NE}_{ij,k} \qquad \forall\,(i,j) \in E \tag{57}$$

$$VSE_{ij} = v^e \sum_{k \in \mathcal{Q}_{ij}} k \cdot \widetilde{NE}_{ij,k} \qquad \forall\,(i,j) \in E \tag{58}$$

Linearisation of family 3 (daily cost ratio). Introduce the auxiliary continuous variable $\widetilde{TC}_{ij,k} := TC_{ij} \cdot z_{ij,k}$, linearised analogously with an upper bound $TC_{ij}^{\max}$:

$$\widetilde{TC}_{ij,k} \leq TC_{ij}^{\max} \cdot z_{ij,k} \qquad \forall\,(i,j) \in E,\ k \in \mathcal{Q}_{ij} \tag{59}$$

$$\widetilde{TC}_{ij,k} \leq TC_{ij} \qquad \forall\,(i,j) \in E,\ k \in \mathcal{Q}_{ij} \tag{60}$$

$$\widetilde{TC}_{ij,k} \geq TC_{ij} - TC_{ij}^{\max}(1 - z_{ij,k}) \qquad \forall\,(i,j) \in E,\ k \in \mathcal{Q}_{ij} \tag{61}$$

$$\widetilde{TC}_{ij,k} \geq 0 \qquad \forall\,(i,j) \in E,\ k \in \mathcal{Q}_{ij} \tag{62}$$

The daily-cost constraint (32) is then replaced by:

$$\sum_{k \in \mathcal{Q}_{ij}} k \cdot \widetilde{TC}_{ij,k} = TCS_{ij} \qquad \forall\,(i,j) \in E \tag{63}$$

After applying Extension L the model contains no products of two decision variables and is a pure mixed-integer linear programme. If Ext. M is also active, all of (49)–(63) are replicated $\forall m \in \mathcal{M}$ with mode-indexed counterparts.