Service Network Design for RTI Transport Optimization

momajuan

This paper proposes a new mixed integer linear mathematical programming (MILP) model, dubbed as SND-RTI (Service Network Design for Returnable Transport Items), for procurement transport planning in manufacturing supply chains. The model integrates transport decisions while accounting for managing returnable transport items (RTIs). Thus, we optimise the strategic decisions in terms of allocated RTIs, purchased RTIs, direct and return routes and Q-days. The optimisation model aims to minimise transportation and inventory costs. Regarding inventory and transport efficiency, the results of the 3D-SCPTOP model are superior to the company procedures.

Keywords— Procurement, inventory, transport planning, full-truckload, 3D container loading

1 Introduction

2 Literature Review

2.1 Research Gaps & Methodology

3 Problem Statement

Managing returnable transport items (RTIs) in a manufacturing supply chain is, at its core, a closed-loop logistics problem. Raw materials, parts and finished goods flow in one direction, from suppliers to customers, but the RTIs that carry them must flow back. The research question this paper addresses is the effectiveness of a collaborative return strategy of RTIs in a given SC, in which empty RTIs are rerouted and consolidated along the network, analyzing economic and environmental costs. To answer this, we propose an optimization model that determines the optimal return routes for empty RTIs, the shipment frequency on each route, and the minimum RTI pool to prevent production disruptions, thereby defining the service network design for RTIs.

We model the SC as a directed graph $G = (V, E)$, where each node $i \in V$ represents a manufacturing site and each arc $(i, j) \in E$ represents a potential transport route, both for empty and full RTIs. Figure 1 illustrates a SC network, where nodes are manufacturing sites and the black arcs represent the daily average flows of full RTIs driven by production demand. Each product family requires a specific RTI type, and the number of RTIs needed per shipment depends on how many raw materials, parts or finished goods fit in a single RTI, as shown in Figure 2.

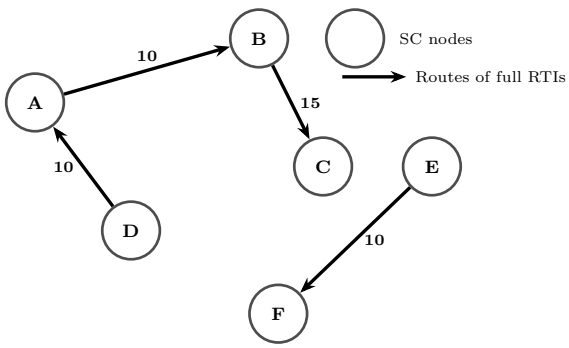

Figure 1: Full RTIs routes

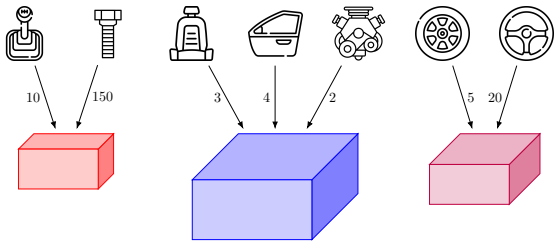

Figure 2: Product quantities per RTI

An RTI exists in one of two states: *full*, when loaded with raw materials, parts and finished goods, or *empty*, once its contents have been consumed at the destination site. Some RTIs can be folded, reducing their volume to decrease transport costs, as shown in Figure 3. The simplest RTI return strategy is a one-to-one relationship, i.e., for every shipment of full RTIs a supplier sends to a customer, the customer must return the empty RTIs along the same route, as depicted in Figure 4. This strategy is operationally straightforward, since each pair of nodes only coordinates with each other. However, it is rarely cost-optimal in large SCs, as it ignores consolidation opportunities along the SC and tends to result in both excessive empty RTI transport costs and a larger RTI pool than strictly necessary, which implies higher RTI investment and inventory costs.

Figure 3: Full and empty folded RTIs

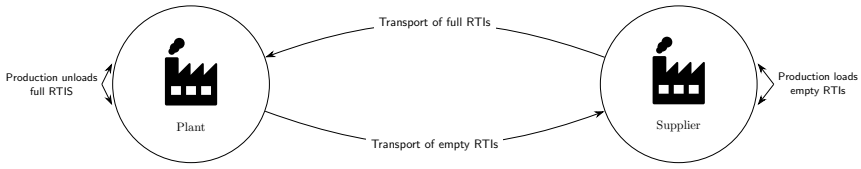

Figure 4: One-to-one RTI return strategy

When a central decision-maker, such as a dominant tier-1 manufacturer, an original equipment manufacturer (OEM) that owns the RTI pool, or a SC platform acting as manufacturing as a service (MaaS) Add reference, has visibility over the entire network, a collaborative RTI return strategy becomes possible. Rather than using a one-to-one RTI return strategy, the model optimizes empty RTI routes, reducing the total distance an empty RTI journeys and consolidating routes. This simultaneously diminishes RTI return costs and the overall RTI pool size. Figure 5a shows the one-to-one baseline, while Figure 5b illustrates how an optimized collaborative strategy reduces RTI return transport costs on the same network. Determining the service network design is the primary objective of this research.

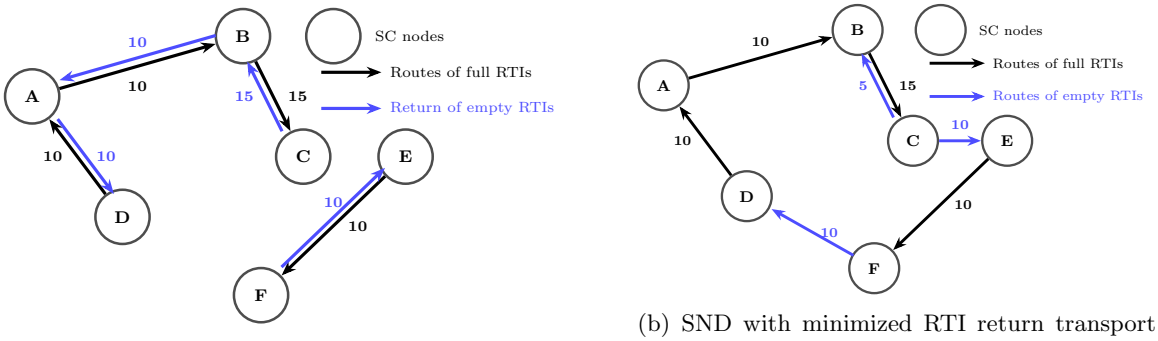

(a) *One-to-one* relationship

(b) SND with minimized RTI return transport cost

Figure 5: SND with minimized RTI return transport cost

On certain routes, full RTIs are accompanied by protective accessories, such as nets or lids, that secure parts during transit. These *inlays* are themselves reusable and must be returned to the origin site after unloading. Here the FTL and LTL, also known as groupage, transport modes are addressed.

The model takes as input data the average daily flows of full RTIs between nodes, derived from released production plans over a planning horizon chosen by the decision-maker, typically a month, quarter, or year. These averages are assumed to be representative of the considered planning horizon, meaning that demands are sufficiently stable for the average to serve as reliable input data, without extreme imbalances that would render it misleading.

While the physical routing of full RTIs is set in advance by established production and procurement contracts (i.e., a specific supplier must deliver to a specific customer a given set of products), the logistical execution of these forward flows is subject to optimization. Specifically, the model determines two operational parameters for the forward flows. First, it selects the optimal RTI type from a set of compatible options for each product. This selection affects the required transport capacity and the subsequent volume of empty returns, as different RTI types possess distinct dimensions and folding ratios. Second, the model determines the dispatch frequency for these full shipments. The shipment frequency governs the accumulation of inventory, creating a fundamental trade-off: longer intervals between shipments improve vehicle utilization and reduce fixed transport costs, but need a larger RTI pool to cover in-transit and waiting stock. Consequently, minimizing the total system cost requires the joint optimization of forward dispatch frequencies and packaging types, alongside the consolidation of empty return routes.

Under this assumption, the problem can be considered a service network design for RTIs, which consists of finding the tradeoff among daily RTI transport cost, which include transport costs for both full and empty RTIs; the inventory holding cost of the RTI pool; and CO_2 emissions from RTI transport. The model determines:

1. Routes for empty RTI and inlay return flows.
2. The RTI type selection for products with multiple compatible packaging options.
3. The shipment frequency per route (both full and empty flows), expressed as a *queue time* (Q-day), i.e. the number of days between consecutive dispatches.
4. The transport mode per route, i.e. FTL or LTL.
5. The total number of RTIs needed in the whole SC network.

The problem encompasses a strategic-tactical decision level, using as input data the daily averages of RTI demand flows. In practice, the daily average flow of full RTIs between nodes is managed by medium-to-long-term production contracts and procurement agreements, which should remain stable over the planning horizon under consideration. The Q-days and transport modes are likewise set with a medium-to-long-term frequency rather than renegotiated daily or weekly. By optimizing strategic-tactical decisions for a given planning horizon, instead of multi-period decisions, the model is computationally efficient even for large industrial networks, where a fully operational multi-period optimization could be intractable to solve. Here, the strategic-tactical perspective provides a scalable upper bound on the achievable savings from collaborative RTI management, by establishing transport routes, Q-days and the RTI pool size, which can subsequently serve as input data for operational-level RTI transport planning.

4 Model Formulation

Table 1 defines the sets, parameters and variables of the model.

Table 1: Model nomenclature

Indices and sets	
V	Set of nodes representing manufacturing plants; $i, j \in V$
$E \subseteq V \times V$	Set of directed edges representing potential transport routes
R	Set of RTI types; $r \in R$
$\mathcal{M}$	Set of transport modes; $m \in \mathcal{M}$
$H \subseteq V$	Set of hub nodes
Parameters	
ric_{ijpr}	Fraction of full shipments on route (i, j) of product p in RTI type r that require a return inlay; independent of transport mode
d_{ijp}	Daily demand of product p on route (i, j), in physical units (parts/day)
κ_{pr}	Capacity: number of units of product p that fit in one RTI of type r
bp_{ijp}	1 if product p must be transported on route (i, j); 0 otherwise
bf_{pr}	1 if product p is compatible with RTI type r; 0 otherwise
ric_{pr}	Fraction of full shipments of product p in RTI type r that require a return inlay
v_r^f	Volume occupied by one full (or inlay) RTI of type r
v_r^e	Volume occupied by one empty (folded) RTI of type r
be_{ijr}	1 if empty RTIs of type r may traverse route (i, j) by mode m; 0 otherwise
bm_{ijm}	1 if mode m is available on route (i, j); 0 otherwise
$c_{ijm}^{\$}$, $c_{ijm}^{CO_2}$	Variable transport cost and emissions per unit volume on route (i, j) by mode m
$f_{ijm}^{\$}$, $f_{ijm}^{CO_2}$	Fixed dispatch cost and emissions per shipment on route (i, j) by mode m
v^f, v^e	Volume occupied by one full (or inlay) RTI and one empty RTI, respectively
l_{ijm}	Transit time on route (i, j) by mode m, in days
$q_m^{\min}$, $q_m^{\max}$	Minimum and maximum queue time for mode m, in days
α^f, α^e	Maintenance loss factor applied to full/inlay and empty RTIs, respectively
ssf_{ijpr}^i, ssf_{ijpr}^j	Safety stock of full RTIs of type r for product p held at the origin and destination of route (i, j), respectively; independent of transport mode
sse_{ijpr}^i, sse_{ijpr}^j	Safety stock of empty RTIs of type r for product p held at the origin and destination of route (i, j), respectively; independent of transport mode
ω_{ijm}, δ_{ijm}	Minimum and maximum shipment volume on route (i, j) by mode m
$fhc_i^{\$}$, $fhc_i^{CO_2}$	Fixed activation cost and emissions at hub $i \in H$
$vhc_i^{\$}$, $vhc_i^{CO_2}$	Variable handling cost and emissions per unit volume at hub $i \in H$
s_r^{RTI}	Existing pool of RTI type r available before optimisation
$p_r^{\text{RTI},\$}$, p_r^{RTI,CO_2}	Unit purchase cost and embodied emissions of purchasing one RTI of type r
M	Sufficiently large constant (big-M)
Decision variables — binary	
X_{ijmr}	1 if route (i, j) carries any RTIs of type r for product p by mode m; 0 otherwise
XF_{ijmpr}, XI_{ijmr}, XE_{ijmr}	1 if route (i, j) carries full RTIs, return inlays, or empty RTIs (resp.) of type r for product p by mode m; 0 otherwise
XH_i	1 if hub $i \in H$ is activated; 0 otherwise
Decision variables — daily flow	
N_{ijmr}, NF_{ijmpr}, NI_{ijmr}, NE_{ijmr}	Daily average number of RTIs (total), full RTIs, return inlays, and empty RTIs on route (i, j), respectively
V_{ijmr}, VF_{ijmpr}, VI_{ijmr}, VE_{ijmr}	Daily average volume of RTIs (total), full RTIs, return inlays, and empty RTIs on route (i, j), respectively
Decision variables — per shipment	
q_{ijm}	Queue time on route (i, j) by mode m: days between consecutive dispatches
NS_{ijmr}, NSF_{ijmr}, NSI_{ijmr}, NSE_{ijmr}	Total number of RTIs (total), full RTIs, return inlays, and empty RTIs loaded per shipment on route (i, j)
VS_{ijmr}, VSF_{ijmr}, VSI_{ijmr}, VSE_{ijmr}	Total volume (total), full RTI volume, inlay volume, and empty RTI volume per shipment on route (i, j)

Decision variables — RTI pool	
TNC_{ijmr}, $TNCF_{ijmr}$, $TNCE_{ijmr}$, $TNCI_{ijmr}$	RTIs (total), full RTIs, empty RTIs, and inlay RTIs allocated to route (i,j), covering queue stock, in-transit stock, safety stock, and losses
P_r	Additional RTIs of type r to purchase; $P_r \geq 0$
Decision variables — cost and hub	
$TCS^{CO_2}_{ijm}$, $TCS^{\$}_{ijm}$	Transport cost and emissions per shipment on route (i,j) by mode m
$TC^{CO_2}_{ijm}$, $TC^{\$}_{ijm}$	Daily transport cost and emissions on route (i,j) by mode m
$CH^{CO_2}_{i}$, $CH^{\$}_{i}$	Daily handling cost and emissions at hub $i \in H$
$PC^{CO_2}_{r}$, $PC^{\$}_{r}$	Amortized daily purchase cost and emissions for RTI type $r \in R$

Variables in the model carry up to five indices (see Table 1). To avoid writing three and four-level summations and writing additional constraints to encode Boolean logic, we adopt the following convention: suppressing one or more indices from a variable and placing an accent on its name produces a derived variable whose values are obtained by collapsing the suppressed indices according to one of three aggregation rules: summation ($\bar{\ }$), logical OR ($\check{\ }$), or at-most-one ($\hat{\ }$). The accent identifies which rule is applied.

Convention 1 (Index suppression and aggregation).

We call the original, fully-indexed variable the *root variable*. Each index of a root variable ranges over a set. The sets over which the retained indices range are called the *projected sets*, and their Cartesian product is denoted Π; the sets over which the suppressed indices range are called the *suppressed sets*, and their Cartesian product is denoted $\mathcal{S}$. We write $\pi \in \Pi$ for a generic element of the projected domain and $\sigma \in \mathcal{S}$ for a generic element of the suppressed domain. A derived variable is defined for every $\pi \in \Pi$ by collapsing all $\sigma \in \mathcal{S}$ according to the aggregation rule indicated by the accent.

Whenever a derived variable appears in any constraint of the model, the variable and its defining constraints (as specified by the applicable rule below) are automatically introduced into the formulation for every $\pi \in \Pi$. In other words, writing a derived variable in a constraint is a shorthand that simultaneously declares the variable and appends its linking constraints to the model; no separate definition is needed.

Rule 1 (Sum, $\bar{\ }$). Suppressing one or more indices and writing a $\bar{\ }$ over the root variable denotes the sum over the suppressed domain $\mathcal{S}$. For every $\pi \in \Pi$ the derived variable is defined by:

$$\bar{\phi}_\pi \;:=\; \sum_{\sigma \in \mathcal{S}} \phi_{\pi,\sigma} \quad \forall\, \pi \in \Pi.$$

For continuous and integer root variables the result is standard summation; for binary root variables it represents an integer count of active entries, not a Boolean sum.

Example. From the root variable NF_{ijmpr} $\big((i,j)\in E,\ m\in\mathcal{M},\ p\in P,\ \ r\in R\big)$, suppressing p ($\Pi = E \times \mathcal{M} \times R$, $\mathcal{S} = P$) and suppressing all indices ($\Pi = \varnothing$, $\mathcal{S} = E \times \mathcal{M} \times P \times R$):

$$\overline{NF}_{ijmr} \;=\; \sum_{p\in P} NF_{ijmpr} \qquad \forall\,(i,j) \in E,\ m \in \mathcal{M},\ r \in R, \tag{1}$$

$$\overline{NF} \;=\; \sum_{(i,j)\in E} \sum_{m\in\mathcal{M}} \sum_{p\in P} \sum_{r\in R} NF_{ijmpr}. \tag{2}$$

Rule 2: Positional disambiguation. When two indices range over the same set, as $i, j \in V$ do in NF_{ijmpr}, suppressing one by name alone is ambiguous. A dot ($\cdot$) marks the suppressed position: $\overline{NF}_{\cdot jmpr} := \sum_{i\in V} NF_{ijmpr}$ suppresses i, while $\overline{NF}_{i\cdot mpr} := \sum_{j\in V} NF_{ijmpr}$ suppresses j. This convention applies to all three rules below.

Rule 3 (OR, $\check{\ }$). **Binary root variables only.** Suppressing one or more indices and writing a $\check{\ }$ over the root variable symbol introduces a new binary variable equal to 1 if and only if at least one root binary sharing the same projected element π is active. For every $\pi \in \Pi$ the new variable $\check{\phi}_\pi$ is coupled to the corresponding sum $\bar{\phi}_\pi$ (Rule 1) via:

$$\check{\phi}_\pi \leq \bar{\phi}_\pi \qquad \forall\, \pi \in \Pi, \tag{3}$$

$$\bar{\phi}_\pi \leq |\mathcal{S}|\ \check{\phi}_\pi \qquad \forall\, \pi \in \Pi, \tag{4}$$

where $|\mathcal{S}|$ is the cardinality of the suppressed domain. Together, (3)–(4) enforce $\check{\phi}_\pi = 1 \iff \bar{\phi}_\pi \geq 1$ and, equivalently, $\check{\phi}_\pi = 0 \iff \bar{\phi}_\pi = 0$.

Example. From the binary XF_{ijmpr}, suppressing the indices m, p, and r we get ($\Pi = E$, $\mathcal{S} = P \times \mathcal{M} \times R$, $|\mathcal{S}| = |R||\mathcal{M}||P|$) yields $\breve{XF}_{ij}$, which equals 1 whenever route (i, j) carries full RTIs:

$$\breve{XF}_{ij} \leq \overline{XF}_{ij} \qquad \forall\,(i,j) \in E, \tag{5}$$

$$\overline{XF}_{ij} \leq |R||\mathcal{M}||P|\ \breve{XF}_{ij} \qquad \forall\,(i,j) \in E. \tag{6}$$

Rule 4 (At-most-one, $\widehat{\ }$). **Binary root variables only.** Suppressing one or more indices and writing a $\widehat{\ }$ over the root variable symbol introduces a new binary variable that equals the sum and simultaneously caps it at 1, asserting that at most one root binary sharing the same projected element π may be active. For every $\pi \in \Pi$ the derived variable is coupled to the corresponding sum via:

$$\widehat{\phi}_\pi \leq \overline{\phi}_\pi \qquad \forall\,\pi \in \Pi, \tag{7}$$

$$\overline{\phi}_\pi \leq \widehat{\phi}_\pi \qquad \forall\,\pi \in \Pi. \tag{8}$$

Because $\widehat{\phi}_\pi \in \{0, 1\}$, both inequalities together force $\overline{\phi}_\pi \in \{0, 1\}$: either no root binary is active ($\widehat{\phi}_\pi = 0$) or exactly one is ($\widehat{\phi}_\pi = 1$). This is equivalent to an SOS1 constraint on the group of root binaries indexed by $\mathcal{S}$ that share the same projected element π.

Example. From XF_{ijmpr}, suppressing m and r ($\Pi = E \times P$, $\mathcal{S} = \mathcal{M} \times R$) yields $\widehat{XF}_{ijp}$, which enforces that at most one mode–RTI-type pair may carry product p on route (i, j):

$$\widehat{XF}_{ijp} \leq \overline{XF}_{ijp} \qquad \forall\,(i,j) \in E,\ p \in P, \tag{9}$$

$$\overline{XF}_{ijp} \leq \widehat{XF}_{ijp} \qquad \forall\,(i,j) \in E,\ p \in P. \tag{10}$$

Table 2 lists the derived variables used in the model. The accent identifies the aggregation rule; the suppressed-indices column shows which dimensions are collapsed. Each variable and its linking constraints are introduced automatically at the point of first use.

Table 2: Derived variables used in the model.

Derived	Root	Suppr.	Rule	Interpretation
$\overline{NF}_{ijmr}$	NF_{ijmpr}	p	$\overline{\ }$	Total daily full-RTI flow on (i, j) by mode m, type r
$\overline{N}_{i\cdot r}$	N_{ijmr}	j, m	$\overline{\ }$	Daily outflow of RTI type r from node i †
$\overline{N}_{\cdot ir}$	N_{ijmr}	j, m	$\overline{\ }$	Daily inflow of RTI type r into node i †
$\breve{XF}_{ijmr}$	XF_{ijmpr}	p	$\breve{\ }$	Any product uses full RTIs on (i, j) by m, r?
$\breve{X}_{ijm}$	X_{ijmr}	r	$\breve{\ }$	Mode m active on (i, j) for any RTI type?
$\breve{X}_{i\cdot}$	X_{ijmr}	j, m, r	$\breve{\ }$	Node i dispatches any flow? (hub activation)
$\breve{XE}_{i\cdot r}$, $\breve{XE}_{\cdot ir}$	XE_{ijmr}	j, m	$\breve{\ }$	Node i dispatching / receiving empties of type r?
$\widehat{XF}_{ijp}$	XF_{ijmpr}	m, r	$\widehat{\ }$	At most one mode–RTI-type pair for product p on (i, j)

†In the outflow variable $\overline{N}_{i\cdot r}$ the first index of the root N_{ijmr} is the focal node i and the suppressed dot replaces j; in the inflow variable $\overline{N}_{\cdot ir}$ the second index is the focal node i and the dot replaces the first index. Both derive from the same root N_{ijmr}, with the positional role of i swapped.

Objective functions. The model evaluates two conflicting objectives: the total economic cost ($Z^{\$}$) and the total environmental impact in terms of CO_2 emissions (Z^{CO_2}). Both objectives account for transport, RTI purchase, and hub handling operations:

$$\min \quad Z^{\$} = \overline{TC}^{\$} + \overline{PC}^{\$} + \overline{CH}^{\$} \tag{11}$$

$$\min \quad Z^{CO_2} = \overline{TC}^{CO_2} + \overline{PC}^{CO_2} + \overline{CH}^{CO_2} \tag{12}$$

Flow conservation. RTIs circulate in a closed loop: the total average daily outflow of RTI type r from any node must equal its total average daily inflow:

$$\overline{N}_{i\cdot r} = \overline{N}_{\cdot ir} \qquad \forall\, i \in V,\ r \in R, \tag{13}$$

Flow–binary consistency. Each root binary is active if and only if the corresponding daily average flow is strictly positive, and only when the route is physically permissible as encoded by the b-parameters:

$$NF_{ijmpr} \leq M \cdot XF_{ijmpr}, \quad XF_{ijmpr} \leq NF_{ijmpr} \cdot bf_{ijp} \cdot bm_{ijm} \cdot bp_{pr} \quad \forall\,(i,j) \in E,\ m \in \mathcal{M},\ p \in P,\ r \in R \tag{14}$$

$$NI_{ijmpr} \leq M \cdot XI_{ijmpr}, \quad XI_{ijmpr} \leq NI_{ijmpr} \cdot bf_{jip} \cdot bm_{ijm} \cdot bp_{pr} \quad \forall\,(i,j) \in E,\ m \in \mathcal{M},\ p \in P,\ r \in R \tag{15}$$

$$NE_{ijmr} \leq M \cdot XE_{ijmr}, \quad XE_{ijmr} \leq NE_{ijmr} \cdot be_{ijr} \cdot bm_{ijm} \quad \forall\,(i,j) \in E,\ m \in \mathcal{M},\ p \in P,\ r \in R. \tag{16}$$

$$N_{ijmr} = \overline{NF}_{ijmr} + \overline{NI}_{ijpr} + NE_{ijmr} \quad \forall\,(i,j) \in E,\ m \in \mathcal{M},\ p \in P,\ r \in R. \tag{17}$$

Route activation. A route is active if and only if it carries at least one RTI in any state: full, empty, or inlay:

$$3 \cdot X_{ijmr} \geq \breve{XF}_{ijmr} + XE_{ijmr} + \breve{XI}_{ijmr} \quad \forall\,(i,j) \in E,\ m \in \mathcal{M},\ p,\ r \in R \tag{18}$$

$$X_{ijmr} \leq \breve{XF}_{ijmr} + XE_{ijmr} + \breve{XI}_{ijmr} \quad \forall\,(i,j) \in E,\ m \in \mathcal{M},\ p,\ r \in R. \tag{19}$$

Full-route activation. For any given product p that has to be transported from i to j, only one RTI type r can be used. $\widehat{XF}_{ijp}$ therefore equals 1 if and only if product p is used in route (i,j), as encoded by the binary parameter bp_{ijp}:

$$\widehat{XF}_{ijp} = bf_{ijp} \quad \forall\,(i,j) \in E,\ p \in P. \tag{20}$$

This simultaneously enforces demand-driven activation and the uniqueness of RTI type per product per route.

Transport mode selection. A mode may only be used on a route if it is physically available there, and at most one mode may operate on any given route:

$$\check{X}_{ijm} \leq bm_{ijm} \quad \forall\,(i,j) \in E,\ m \in \mathcal{M} \tag{21}$$

$$\sum_{m \in \mathcal{M}} \check{X}_{ijm} \leq 1 \quad \forall\,(i,j) \in E, \tag{22}$$

Hub nodes. Hub nodes $i \in H \subseteq V$ are intermediate consolidation points that aggregate outgoing flows and incur a handling cost with fixed component $fhc_i \geq 0$ and variable component $vhc_i \geq 0$ per unit volume.

At every non-hub node $i \in V \backslash H$, a node may not simultaneously receive and dispatch empty RTIs of the same type $r \in R$:

$$\breve{XE}_{\cdot ir} + \breve{XE}_{i \cdot r} \leq 1 \quad \forall\, i \in V \backslash H, r \in R. \tag{23}$$

For every hub node $i \in H$, the binary XH_i equals 1 if and only if hub i is activated, i.e. if at least one outgoing route from i is used:

$$XH_i = \check{X}_{i\cdot} \quad \forall, i \in H \tag{24}$$

$$CH_i^{\$} = fhc_i^{\$} \cdot XH_i + vhc_i^{\$} \cdot \overline{V}_{i\cdot} \quad \forall\, i \in H \tag{25}$$

$$CH_i^{CO_2} = fhc_i^{CO_2} \cdot XH_i + vhc_i^{CO_2} \cdot \overline{V}_{i\cdot} \quad \forall\, i \in H. \tag{26}$$

Full-RTI route flow. The number of full containers for a route depends on the chosen RTI type $r \in R$ and the demand of the product p:

$$NF_{ijmpr} \cdot \kappa_{pr} \geq d_{ijp} \cdot XF_{ijmpr} \quad \forall\,(i,j) \in E,\ m \in \mathcal{M},\ p,\ r \in R. \tag{27}$$

Inlay return flows. Where a full shipment on route (i,j) requires an inlay, that inlay is returned on the reverse route (j,i). The daily return-inlay flow is proportional to the fraction of full shipments that require one and the RTI is the same:

$$\overline{XI}_{jipr} = \overline{XF}_{ijpr} \quad \forall\,(i,j) \in E,\ m \in \mathcal{M},\ p,\ r \in R, \tag{28}$$

$$\overline{NI}_{jipr} \geq ric_{pr} \cdot \overline{NF}_{ijpr} \quad \forall\,(i,j) \in E,\ m \in \mathcal{M},\ p,\ r \in R. \tag{29}$$

Daily average volumes. Full and inlay RTIs are carrying items and occupy volume v^f per unit; empty RTIs are collapsed and occupy volume v^e per unit. The total daily volume on each route is the sum of the three:

$$VF_{ijmpr} = NF_{ijmpr} \cdot v^f \qquad \forall\,(i,j) \in E,\ m \in \mathcal{M},\ p,\ r \in R \tag{30}$$

$$VI_{ijmpr} = NI_{ijmpr} \cdot v^f \qquad \forall\,(i,j) \in E,\ m \in \mathcal{M},\ p,\ r \in R \tag{31}$$

$$VE_{ijmr} = NE_{ijmr} \cdot v^e \qquad \forall\,(i,j) \in E,\ m \in \mathcal{M},\ p,\ r \in R \tag{32}$$

$$V_{ijmr} = \overline{VF}_{ijmr} + \overline{VI}_{ijmr} + VE_{ijmr} \qquad \forall\,(i,j) \in E,\ m \in \mathcal{M},\ p,\ r \in R. \tag{33}$$

Per-shipment RTI counts. Shipments are made with a regular frequency denoted by q_{ijm}. The number of RTIs loaded onto each shipment equals the daily average flow multiplied by the queue time. These products are *nonlinear* and will be linearised in Section **??**:

$$NSF_{ijmpr} = NF_{ijmpr} \cdot q_{ijm} \qquad \forall\,(i,j) \in E,\ m \in \mathcal{M},\ p,\ r \in R \tag{34}$$

$$NSI_{ijmpr} = NI_{ijmpr} \cdot q_{ijm} \qquad \forall\,(i,j) \in E,\ m \in \mathcal{M},\ p,\ r \in R \tag{35}$$

$$NSE_{ijmr} = NE_{ijmr} \cdot q_{ijm} \qquad \forall\,(i,j) \in E,\ m \in \mathcal{M},\ p,\ r \in R \tag{36}$$

$$NS_{ijmr} = NSF_{ijmr} + NSI_{ijmr} + NSE_{ijmr} \qquad \forall\,(i,j) \in E,\ m \in \mathcal{M},\ p,\ r \in R. \tag{37}$$

Per-shipment volumes. Analogously, per-shipment volumes are the daily average volumes scaled by the queue time, and are likewise nonlinear:

$$VSF_{ijmpr} = VF_{ijmpr} \cdot q_{ijm} \qquad \forall\,(i,j) \in E,\ m \in \mathcal{M},\ p,\ r \in R \tag{38}$$

$$VSI_{ijmpr} = VI_{ijmpr} \cdot q_{ijm} \qquad \forall\,(i,j) \in E,\ m \in \mathcal{M},\ p,\ r \in R \tag{39}$$

$$VSE_{ijmr} = VE_{ijmr} \cdot q_{ijm} \qquad \forall\,(i,j) \in E,\ m \in \mathcal{M},\ p,\ r \in R \tag{40}$$

$$VS_{ijmr} = \overline{VSF}_{ijmr} + \overline{VSI}_{ijmr} + VSE_{ijmr} \qquad \forall\,(i,j) \in E,\ m \in \mathcal{M},\ p,\ r \in R. \tag{41}$$

Queue time bounds. The queue time must lie within the operationally permitted range $[q_m^{\min}, q_m^{\max}]$ for the chosen mode; on inactive routes the queue time collapses to zero:

$$q_m^{\min} \cdot \check{X}_{ijm} \;\le\; q_{ijm} \;\le\; q_m^{\max} \cdot \check{X}_{ijm} \qquad \forall\,(i,j) \in E,\ m \in \mathcal{M}. \tag{42}$$

Shipment volume bounds. Each active shipment must meet a minimum and maximum load factor of the selected mode:

$$\omega_{ijm} \cdot \check{X}_{ijm} \;\le\; \overline{VS}_{ijm} \;\le\; \delta_{ijm} \cdot \check{X}_{ijm} \qquad \forall\,(i,j) \in E,\ m \in \mathcal{M}, \tag{43}$$

Total RTI pool requirements. The RTIs allocated to a route cover four components: the queue stock loaded per shipment; the in-transit stock en route; the safety stocks held at both endpoints; and a margin for maintenance losses. Safety stocks depend on the route, product, and RTI type only, and do not vary by mode. Full and inlay RTIs attract a loss factor of α^f; empty RTIs attract α^e. We do not contemplate the necessesity of considering safety stocks for inlay RTIs.

$$TNCF_{ijmr} = (1+\alpha^f)\Big(NSF_{ijmr} + l_{ijm} \cdot NF_{ijmr} + XF_{ijmr}\big(ssf^i_{ijpr} + ssf^j_{ijpr}\big)\Big) \qquad \forall\,(i,j) \in E,\ m \in \mathcal{M},\ p,\ r \in R \tag{44}$$

$$TNCE_{ijmr} = (1+\alpha^e)\Big(NSE_{ijmr} + l_{ijm} \cdot NE_{ijmr} + XE_{ijmr}\big(sse^i_{ijpr} + sse^j_{ijpr}\big)\Big) \qquad \forall\,(i,j) \in E,\ m \in \mathcal{M},\ p,\ r \in R \tag{45}$$

$$TNCI_{ijmr} = (1+\alpha^f)(NSI_{ijmr} + l_{ijm} \cdot NI_{ijmr}) \qquad \forall\,(i,j) \in E,\ m \in \mathcal{M},\ p,\ r \in R \tag{46}$$

$$TNC_{ijmr} = TNCF_{ijmr} + TNCE_{ijmr} + TNCI_{ijmr} \qquad \forall\,(i,j) \in E,\ m \in \mathcal{M},\ p,\ r \in R. \tag{47}$$

RTI purchase. If the total pool requirement across all routes exceeds the existing stock of RTI type r, the shortfall must be procured:

$$\overline{TNC}_r \;\leq\; s_r^{\text{RTI}} + P_r, \qquad P_r \geq 0 \qquad\qquad \forall\, r \in R. \tag{48}$$

Daily transport costs and emissions. The cost and emissions of a single shipment on route (i, j) by mode m combine a variable charge proportional to total shipment volume and a fixed dispatch value incurred whenever the route is active. Converting to a daily equivalent by dividing by the queue time yields the daily route impact; this division is *nonlinear* and will be linearised in Section **??**:

$$TCS_{ijm}^{\$} = VS_{ijm} \cdot c_{ijm}^{\$} + \check{X}_{ijm} \cdot f_{ijm}^{\$} \qquad \forall\, (i,j) \in E,\; m \in \mathcal{M} \tag{49}$$

$$TCS_{ijm}^{CO_2} = VS_{ijm} \cdot c_{ijm}^{CO_2} + \check{X}_{ijm} \cdot f_{ijm}^{CO_2} \qquad \forall\, (i,j) \in E,\; m \in \mathcal{M} \tag{50}$$

$$TC_{ijm}^{\$} \cdot q_{ijm} = TCS_{ijm}^{\$} \qquad \forall\, (i,j) \in E,\; m \in \mathcal{M} \tag{51}$$

$$TC_{ijm}^{CO_2} \cdot q_{ijm} = TCS_{ijm}^{CO_2} \qquad \forall\, (i,j) \in E,\; m \in \mathcal{M}. \tag{52}$$

5 Computational Experiments

This section evaluates the proposed SND-RTI model through a series of computational experiments on randomly generated instances that approximate real-world manufacturing supply chains. The experiments pursue two objectives: (i) assessing the computational scalability of the linearised MILP as the network grows; and (ii) quantifying the cost savings of the optimised collaborative return strategy relative to the conventional one-to-one baseline.

5.1 Instance Generation

Instances are generated to mirror the structure of multi-tier manufacturing supply chains, where plants are geographically clustered in industrial zones and connected by transport routes of varying distance and mode availability.

Network topology. Each instance is built in three steps.

1. **Industrial zones.** n_Z industrial zones are placed uniformly at random in a $[0, L] \times [0, L]$ km^2 area, where L is chosen according to the instance class (Table 3). Each zone z contains n_z^L large plants and n_z^S small plants, drawn from the ranges specified in Table 3. Plants within a zone are scattered around the zone centre with a Gaussian offset (σ_{intra} km).
2. **Route generation.** A full-RTI route (i, j) is generated between every ordered pair of plants that satisfies a demand condition (see below). Large plants have a higher probability p^{inter} of sourcing from plants in *other* zones, while small plants have a higher probability p^{intra} of sourcing within the *same* zone. Specifically, for each plant j, a set of suppliers is sampled: with probability p^{inter} (resp. p^{intra}) a candidate supplier is drawn from another zone (resp. the same zone). The expected number of supply routes per plant is controlled by parameter $\bar{k}$. Empty-RTI return routes are allowed between any pair of nodes in the network, i.e. $be_{ijmr} = 1$ for all $(i, j) \in V \times V$, $m \in \mathcal{M}$, $r \in R$, since the model optimises which of these potential return arcs are actually used.
3. **Hub designation.** Each industrial zone contains n_H candidate hub nodes ($H \subseteq V$), reflecting the common practice of co-locating consolidation centres within industrial areas. The value of n_H scales with the instance class: $n_H = 1$ for Small, $n_H = 2$ for Medium, and $n_H = 3$ for Large instances (see Table 3). Within each zone, hub candidates are selected among the nodes with the highest total inflow plus outflow of full RTIs. The total number of candidate hubs is therefore $|H| = n_H \cdot n_Z$; the model decides which of these candidates to activate.

Demand and product assignment. Each full-RTI route (i, j) carries one or more products from the product set P. The number of products per route depends on the instance class and the type of the receiving plant: routes serving large plants carry up to 2 products in Small instances, up to 3 in Medium, and up to 4 in Large instances; routes serving small plants carry a single product. For each product assigned to a route, the daily average demand in full RTI units, μ_{ijmpr}, is drawn from a log-normal distribution LogNormal(μ_d, σ_d), rounded to the nearest integer, to reflect the right-skewed demand patterns typical of

manufacturing supply chains. Large plants receive demands from the upper quartile of the distribution to model their higher throughput. The inlay fraction ric_{ijpr} is drawn uniformly from $[0, r^{\max}]$.

RTI types and transport modes. Each product p is compatible with a subset of RTI types $R_p \subseteq R$. The majority of products are assigned to a single RTI type ($|R_p| = 1$), chosen uniformly at random from R. A smaller fraction of products admits multiple compatible types: up to 2 in Small instances, 2–3 in Medium, and up to 4 in Large instances. The parameter bf_{ijmrp} is set to 1 for every compatible product–RTI-type pair on routes where product p is demanded; the model selects the type to use. Two transport modes are considered throughout: $\mathcal{M} = \{\text{FTL}, \text{LTL}\}$. Mode availability bm_{ijm} depends on distance: routes shorter than $d^{\text{FTL}}_{\min}$ km are LTL-only; routes longer than $d^{\text{LTL}}_{\max}$ km are FTL-only; all others admit both modes.

Cost and capacity parameters. Variable transport costs c_{ijm} are set proportional to the Euclidean distance between nodes, with mode-specific rates c^{FTL} and c^{LTL} per km per m^3. Fixed dispatch costs f_{ijm} are mode-dependent constants. Vehicle capacities δ_{ijm} and minimum load factors ω_{ijm} follow industry-standard values for full-truckload and groupage shipments. Transit times l_{ijm} are obtained by dividing the Euclidean distance by an average speed of $v_{\text{avg}} = 500$ km/day, common to both modes. Mode availability thresholds are set to $d^{\text{FTL}}_{\min} = 50$ km and $d^{\text{LTL}}_{\max} = 800$ km.

Safety stocks and existing pool. Safety stocks at both endpoints of each route are set to three days of the daily average demand on that route: $ssf^i_{ijpr} = ssf^j_{ijpr} = 3\,\mu_{ijmpr}$ for full RTIs, and $sse^i_{ijpr} = sse^j_{ijpr} = 3\,NE_{ijmr}$ for empty RTIs. The existing RTI pool is set to zero for all types ($s^{\text{RTI}}_r = 0$), so that the model must purchase the entire pool; this isolates the effect of the network design on total RTI investment. Non-zero initial pools are reserved for the case study, where historical inventory data are available.

Linearisation. The continuous queue time q_{ijm} is discretised over the set of admissible integer values $\mathcal{Q}_m = \{q^{\min}_m, q^{\min}_m{+}1, \ldots, q^{\max}_m\}$, yielding $|\mathcal{Q}_{\text{FTL}}| = 8$ and $|\mathcal{Q}_{\text{LTL}}| = 5$ candidate values. Each candidate $k \in \mathcal{Q}_m$ is associated with a binary variable indicating whether it is selected; all bilinear products of the form $q_{ijm} \cdot (\cdot)$ are replaced by their linearised counterparts as described in the model formulation.

RTI volumes v^f_r and v^e_r, purchase costs p^{RTI}_r, loss factors α^f and α^e, and hub costs fhc_i and vhc_i are sampled from the ranges reported in Table 4.

5.2 Instance Classes

Three classes of instances—Small, Medium, and Large—are defined by scaling the number of industrial zones, plants per zone, RTI types, and products. Table 3 summarises the dimensions. For each class, N_{inst} instances are generated with different random seeds to allow statistical comparison.

Table 3: Instance classes and their dimensions.

Class	n_Z	n^L_z	n^S_z	n_H	$\lvert V\rvert$	$\lvert E\rvert$ (approx.)	$\lvert R\rvert$	$\max\lvert R_p\rvert$	$\lvert P\rvert$	$\lvert\mathcal{M}\rvert$	N_{inst}
Small	2–3	1–2	2–4	1	10–20	15–40	2	2	3–5	2	10
Medium	4–6	2–3	4–8	2	30–60	60–150	3–4	3	6–10	2	10
Large	8–12	3–5	6–12	3	80–180	200–600	4–6	4	10–20	2	10

5.3 Experimental Setup

All experiments are run on a workstation equipped with an Intel® Core™ i7-XXXXX processor (X cores, X.X GHz) and XX GB RAM, running Ubuntu XX.XX. The linearised MILP is solved with Gurobi XX.X using default settings, with a time limit of 3 600 s for Small and Medium instances and 7 200 s for Large instances. The optimality gap tolerance is set to 0.5 %.

5.4 Experiment 1: Computational Scalability

The first experiment evaluates how the solution time and the optimality gap scale with the instance dimensions. For each instance class, Table 5 reports the number of binary and continuous variables, the number

Table 4: Parameter ranges for instance generation.

Parameter	**Range / Value**	**Unit**
Network generation		
L (area side)	500 / 1 000 / 1 500	km
σ_{intra}	5–15	km
$\bar{k}$ (avg. suppliers per plant)	2–4	—
p^{inter} (large plants)	0.7	—
p^{intra} (small plants)	0.7	—
n_H (candidate hubs per zone)	1 / 2 / 3	—
Demand and products		
μ_d, σ_d (demand log-normal)	$(2.0, 0.8)$	RTI/day
$r^{\max}$ (max inlay fraction)	0.3	—
$\lvert R_p \rvert$ (compatible RTI types per product)	1 (majority); up to 2 / 3 / 4	—
Transport		
c^{FTL}, c^{LTL}	0.05, 0.12	€/km/m^3
f^{FTL}, f^{LTL}	150, 40	€/shipment
δ^{FTL}, δ^{LTL}	80, 30	m^3
ω^{FTL}, ω^{LTL}	40, 5	m^3
v_{avg} (average speed)	500	km/day
$d^{\text{FTL}}_{\min}$ (FTL minimum distance)	50	km
$d^{\text{LTL}}_{\max}$ (LTL maximum distance)	800	km
$[q^{\min}, q^{\max}]_{\text{FTL}}$	$[3, 10]$	days
$[q^{\min}, q^{\max}]_{\text{LTL}}$	$[1, 5]$	days
$\lvert \mathcal{Q}_{\text{FTL}} \rvert$, $\lvert \mathcal{Q}_{\text{LTL}} \rvert$	8, 5	—
RTI and inventory		
v^f_r	0.3–0.8	m^3
v^e_r / v^f_r (folding ratio)	0.2–0.5	—
p^{RTI}_r	30–120	€
s^{RTI}_r (existing pool)	0	—
ss_{days} (safety stock)	3	days
α^f, α^e	0.02–0.05	—
Hubs		
fhc_i	200–500	€/day
vhc_i	0.5–2.0	€/m^3

of constraints, the average solution time, the median optimality gap at termination, and the fraction of instances solved to the gap tolerance within the time limit.

To identify the dominant source of complexity, we additionally report solve times as a function of each individual scaling dimension—$|V|$, $|E|$, and $|R|$—while holding the other two approximately constant.

5.5 Experiment 2: Cost Savings Relative to the One-to-One Baseline

The second experiment compares the optimised SND-RTI solution with the one-to-one baseline described in Section **??**. In the baseline, every full-RTI route (i, j) is paired with a mirror return route (j, i) that ships back the exact number of empty RTIs consumed at j, using the same transport mode. No consolidation or rerouting of empty RTIs is allowed, and no hubs are activated.

For each instance, we compute the baseline cost by fixing the empty return routes to their one-to-one configuration and solving the remaining model (queue times and RTI pool) to optimality. The relative savings of the SND-RTI solution are decomposed into three components:

1. **Transport cost savings** (ΔTC): reduction in the total daily transport cost $\overline{TC}$, driven by route consolidation and mode switching on the return legs.
2. **RTI pool savings** (ΔP): reduction in the number of purchased RTIs, achieved by shorter return cycles and better pool utilisation.

Table 5: Computational scalability across instance classes. Times and gaps are averaged over N_{inst} instances per class.

Class	Bin. vars	Cont. vars	Constrs	Avg. time (s)	Med. gap (%)	Solved (%)
Small	—	—	—	—	—	—
Medium	—	—	—	—	—	—
Large	—	—	—	—	—	—

3. **Hub cost** (ΔCH): the additional hub-handling cost incurred by the optimised solution, partially offsetting the above savings.

Table 6 reports the average and range of these savings across all instances within each class.

Table 6: Cost savings of SND-RTI over the one-to-one baseline (average ± std. dev. across instances).

Class	ΔTC (%)	ΔP (%)	ΔCH (€/day)	Total savings (%)
Small	—	—	—	—
Medium	—	—	—	—
Large	—	—	—	—

We further analyse how the network density—measured as the ratio $|E|/|V|$—affects the magnitude of savings, since denser networks offer more consolidation opportunities for empty-RTI returns.

5.6 Discussion

A Full Non Linear Model

Table 7: Explicit binary variables replacing aggregation conventions

Variable	Type	Description
YF_{ijmr}	Binary	1 if any product p uses full RTIs on route (i,j) by mode m, type r; 0 otherwise.
YI_{ijmr}	Binary	1 if any product p uses inlay RTIs on route (i,j) by mode m, type r; 0 otherwise.
YM_{ijm}	Binary	1 if mode m is active on route (i,j) for any RTI type r; 0 otherwise.
$YEOUT_{ir}$	Binary	1 if node i dispatches empty RTIs of type r to any destination j by any mode m; 0 otherwise.
$YEIN_{ir}$	Binary	1 if node i receives empty RTIs of type r from any origin j by any mode m; 0 otherwise.

Objective function.

$$\min \quad \sum_{(i,j)\in E} \sum_{m\in\mathcal{M}} TC_{ijm} \;+\; \sum_{r\in R} p_r^{\text{RTI}} \cdot P_r \;+\; \sum_{i\in H} CH_i \tag{53}$$

Flow conservation.

$$\sum_{j\in V} \sum_{m\in\mathcal{M}} N_{ijmr} = \sum_{j\in V} \sum_{m\in\mathcal{M}} N_{jimr} \qquad \forall\, i\in V,\; r\in R \tag{54}$$

Flow–binary consistency.

$$NF_{ijmpr} \leq M \cdot XF_{ijmpr}, \quad XF_{ijmpr} \leq NF_{ijmpr} \cdot bf_{ijmpr} \qquad \forall\,(i,j) \in E,\ m \in \mathcal{M},\ p \in P,\ r \in R \tag{55}$$

$$NI_{ijmpr} \leq M \cdot XI_{ijmpr}, \quad XI_{ijmpr} \leq NI_{ijmpr} \cdot bf_{jimpr} \qquad \forall\,(i,j) \in E,\ m \in \mathcal{M},\ p \in P,\ r \in R \tag{56}$$

$$NE_{ijmr} \leq M \cdot XE_{ijmr}, \quad XE_{ijmr} \leq NE_{ijmr} \cdot be_{ijmr} \qquad \forall\,(i,j) \in E,\ m \in \mathcal{M},\ r \in R \tag{57}$$

$$N_{ijmr} = \sum_{p \in P} NF_{ijmpr} + \sum_{p \in P} NI_{ijmpr} + NE_{ijmr} \qquad \forall\,(i,j) \in E,\ m \in \mathcal{M},\ r \in R \tag{58}$$

Route activation.

$$3 \cdot X_{ijmr} \geq YF_{ijmr} + XE_{ijmr} + YI_{ijmr} \qquad \forall\,(i,j) \in E,\ m \in \mathcal{M},\ r \in R \tag{59}$$

$$X_{ijmr} \leq YF_{ijmr} + XE_{ijmr} + YI_{ijmr} \qquad \forall\,(i,j) \in E,\ m \in \mathcal{M},\ r \in R \tag{60}$$

Full-route activation.

$$\sum_{m \in \mathcal{M}} \sum_{r \in R} XF_{ijmpr} = bp_{ijp} \qquad \forall\,(i,j) \in E,\ p \in P \tag{61}$$

Transport mode selection.

$$YM_{ijm} \leq bm_{ijm} \qquad \forall\,(i,j) \in E,\ m \in \mathcal{M} \tag{62}$$

$$\sum_{m \in \mathcal{M}} YM_{ijm} \leq 1 \qquad \forall\,(i,j) \in E \tag{63}$$

Hub nodes.

$$YEOUT_{ir} + YEIN_{ir} \leq 1 \qquad \forall\, i \in V \backslash H, r \in R \tag{64}$$

$$CH_i = fhc_i \cdot XH_i + vhc_i \sum_{j \in V} \sum_{m \in \mathcal{M}} \sum_{r \in R} V_{ijmr} \qquad \forall\, i \in H \tag{65}$$

Demand satisfaction.

$$NF_{ijmpr} = \mu_{ijmpr} \cdot XF_{ijmpr} \qquad \forall\,(i,j) \in E,\ m \in \mathcal{M},\ p \in P,\ r \in R \tag{66}$$

Inlay return flows.

$$NI_{jimpr} = ric_{ijpr} \cdot \mu_{ijmpr} \cdot XF_{ijmpr} \qquad \forall\,(i,j) \in E,\ m \in \mathcal{M},\ p \in P,\ r \in R \tag{67}$$

Daily average volumes.

$$VF_{ijmr} = \left(\sum_{p \in P} NF_{ijmpr} \right) v^f \qquad \forall\,(i,j) \in E,\ m \in \mathcal{M},\ r \in R \tag{68}$$

$$VI_{ijmr} = \left(\sum_{p \in P} NI_{ijmpr} \right) v^f \qquad \forall\,(i,j) \in E,\ m \in \mathcal{M},\ r \in R \tag{69}$$

$$VE_{ijmr} = NE_{ijmr} \cdot v^e \qquad \forall\,(i,j) \in E,\ m \in \mathcal{M},\ r \in R \tag{70}$$

$$V_{ijmr} = VF_{ijmr} + VI_{ijmr} + VE_{ijmr} \qquad \forall\,(i,j) \in E,\ m \in \mathcal{M},\ r \in R \tag{71}$$

Per-shipment RTI counts.

$$NSF_{ijmr} = \left(\sum_{p \in P} NF_{ijmpr} \right) q_{ijm} \qquad \forall\,(i,j) \in E,\ m \in \mathcal{M},\ r \in R \tag{72}$$

$$NSI_{ijmr} = \left(\sum_{p \in P} NI_{ijmpr} \right) q_{ijm} \qquad \forall\,(i,j) \in E,\ m \in \mathcal{M},\ r \in R \tag{73}$$

$$NSE_{ijmr} = NE_{ijmr} \cdot q_{ijm} \qquad \forall\,(i,j) \in E,\ m \in \mathcal{M},\ r \in R \tag{74}$$

$$NS_{ijmr} = NSF_{ijmr} + NSI_{ijmr} + NSE_{ijmr} \qquad \forall\,(i,j) \in E,\ m \in \mathcal{M},\ r \in R \tag{75}$$

Per-shipment volumes.

$$VSF_{ijmr} = VF_{ijmr} \cdot q_{ijm} \qquad \forall\,(i,j) \in E,\ m \in \mathcal{M},\ r \in R \tag{76}$$

$$VSI_{ijmr} = VI_{ijmr} \cdot q_{ijm} \qquad \forall\,(i,j) \in E,\ m \in \mathcal{M},\ r \in R \tag{77}$$

$$VSE_{ijmr} = VE_{ijmr} \cdot q_{ijm} \qquad \forall\,(i,j) \in E,\ m \in \mathcal{M},\ r \in R \tag{78}$$

$$VS_{ijmr} = VSF_{ijmr} + VSI_{ijmr} + VSE_{ijmr} \qquad \forall\,(i,j) \in E,\ m \in \mathcal{M},\ r \in R \tag{79}$$

Queue time bounds.

$$q_m^{\min} \cdot YM_{ijm} \ \le\ q_{ijm} \ \le\ q_m^{\max} \cdot YM_{ijm} \qquad \forall\,(i,j) \in E,\ m \in \mathcal{M} \tag{80}$$

Shipment volume bounds.

$$\omega_{ijm} \cdot YM_{ijm} \ \le\ \sum_{r \in R} VS_{ijmr} \ \le\ \delta_{ijm} \cdot YM_{ijm} \qquad \forall\,(i,j) \in E,\ m \in \mathcal{M} \tag{81}$$

Total RTI pool requirements.

$$TNCF_{ijmr} = (1+\alpha^f)\left(NSF_{ijmr} + l_{ijm} \cdot \sum_{p \in P} NF_{ijmpr} + XF_{ijmr}\big(ssf^i_{ijpr} + ssf^j_{ijpr}\big)\right) \qquad \forall\,(i,j) \in E,\ m \in \mathcal{M},\ p \in P,\ r \in R \tag{82}$$

$$TNCE_{ijmr} = (1+\alpha^e)\Big(NSE_{ijmr} + l_{ijm} \cdot NE_{ijmr} + XE_{ijmr}\big(sse^i_{ijpr} + sse^j_{ijpr}\big)\Big) \qquad \forall\,(i,j) \in E,\ m \in \mathcal{M},\ p \in P,\ r \in R \tag{83}$$

$$TNCI_{ijmr} = (1+\alpha^f)\left(NSI_{ijmr} + l_{ijm} \cdot \sum_{p \in P} NI_{ijmpr}\right) \qquad \forall\,(i,j) \in E,\ m \in \mathcal{M},\ p \in P,\ r \in R \tag{84}$$

$$TNC_{ijmr} = TNCF_{ijmr} + TNCE_{ijmr} + TNCI_{ijmr} \qquad \forall\,(i,j) \in E,\ m \in \mathcal{M},\ p \in P,\ r \in R \tag{85}$$

RTI purchase.

$$\sum_{(i,j) \in E} \sum_{m \in \mathcal{M}} \sum_{p \in P} TNC_{ijmr} \le s_r^{\mathrm{RTI}} + P_r, \qquad P_r \ge 0 \qquad \forall\, r \in R \tag{86}$$

Daily transport costs.

$$TCS_{ijm} = \left(\sum_{r \in R} VS_{ijmr}\right) c_{ijm} + \left(\sum_{r \in R} X_{ijmr}\right) f_{ijm} \qquad \forall\,(i,j) \in E,\ m \in \mathcal{M} \tag{87}$$

$$TC_{ijm} \cdot q_{ijm} = TCS_{ijm} \qquad \forall\,(i,j) \in E,\ m \in \mathcal{M} \tag{88}$$

Logical Linking Constraints.

$$YF_{ijmr} \leq \sum_{p \in P} XF_{ijmpr} \qquad \forall\, (i,j) \in E,\ m \in \mathcal{M},\ r \in R \tag{89}$$

$$\sum_{p \in P} XF_{ijmpr} \leq |P| \cdot YF_{ijmr} \qquad \forall\, (i,j) \in E,\ m \in \mathcal{M},\ r \in R \tag{90}$$

$$YI_{ijmr} \leq \sum_{p \in P} XI_{ijmpr} \qquad \forall\, (i,j) \in E,\ m \in \mathcal{M},\ r \in R \tag{91}$$

$$\sum_{p \in P} XI_{ijmpr} \leq |P| \cdot YI_{ijmr} \qquad \forall\, (i,j) \in E,\ m \in \mathcal{M},\ r \in R \tag{92}$$

$$YM_{ijm} \leq \sum_{r \in R} X_{ijmr} \qquad \forall\, (i,j) \in E,\ m \in \mathcal{M} \tag{93}$$

$$\sum_{r \in R} X_{ijmr} \leq |R| \cdot YM_{ijm} \qquad \forall\, (i,j) \in E,\ m \in \mathcal{M} \tag{94}$$

$$XH_i \leq \sum_{j \in V} \sum_{m \in \mathcal{M}} \sum_{r \in R} X_{ijmr} \qquad \forall\, i \in H \tag{95}$$

$$\sum_{j \in V} \sum_{m \in \mathcal{M}} \sum_{r \in R} X_{ijmr} \leq |V||\mathcal{M}||R| \cdot XH_i \qquad \forall\, i \in H \tag{96}$$

$$YEOUT_{ir} \leq \sum_{j \in V} \sum_{m \in \mathcal{M}} XE_{ijmr} \qquad \forall\, i \in V,\ r \in R \tag{97}$$

$$\sum_{j \in V} \sum_{m \in \mathcal{M}} XE_{ijmr} \leq |V||\mathcal{M}| \cdot YEOUT_{ir} \qquad \forall\, i \in V,\ r \in R \tag{98}$$

$$YEIN_{ir} \leq \sum_{j \in V} \sum_{m \in \mathcal{M}} XE_{jimr} \qquad \forall\, i \in V,\ r \in R \tag{99}$$

$$\sum_{j \in V} \sum_{m \in \mathcal{M}} XE_{jimr} \leq |V||\mathcal{M}| \cdot YEIN_{ir} \qquad \forall\, i \in V,\ r \in R \tag{100}$$