Service Network Design for RTI Transport Optimization

This paper proposes a new mixed integer linear mathematical programming (MILP) model, dubbed as SND-RTI (Service Network Design for Returnable Transport Items), for procurement transport planning in manufacturing supply chains. The model integrates transport decisions while accounting for managing returnable transport items (RTIs). Thus, we optimise the strategic decisions in terms of allocated RTIs, purchased RTIs, direct and return routes and Q-days. The optimisation model aims to minimise transportation and inventory costs. Regarding inventory and transport efficiency, the results of the 3D-SCPTOP model are superior to the company procedures.
Keywords— Procurement, inventory, transport planning, full-truckload, 3D container loading

1 Introduction

2 Literature Review

2.1 Research Gaps & Methodology

3 Problem Statement

Managing returnable transport items (RTIs) in a manufacturing supply chain is, at its core, a closed-loop logistics problem. Raw materials, parts and finished goods flow in one direction, from suppliers to customers, but the RTIs that carry them must flow back. The research question this paper addresses is the effectiveness of a collaborative return strategy of RTIs in a given SC, in which empty RTIs are rerouted and consolidated along the network, analysing economic and environmental costs. To answer this, we propose an optimisation model that determines the optimal return routes for empty RTIs, the shipment frequency on each route, and the minimum RTI pool to prevent production disruptions thereby defining the service network desing for RTIs.

We model the SC as a directed graph $G = (V, E)$, where each node $i \in V$ represents a manufacturing site and each arc $(i, j) \in E$ represents a potential transport route, both for emtpy and full RTIs. Figure 1 illustrates a SC network, where nodes are manufacturing sites and the black arcs represent the daily average flows of full RTIs driven by production demand. Each product family requires a specific RTI type, and the number of RTIs needed per shipment depends on how many raw materials, parts or finished goods fit in a single RTI, as shown in Figure 2.

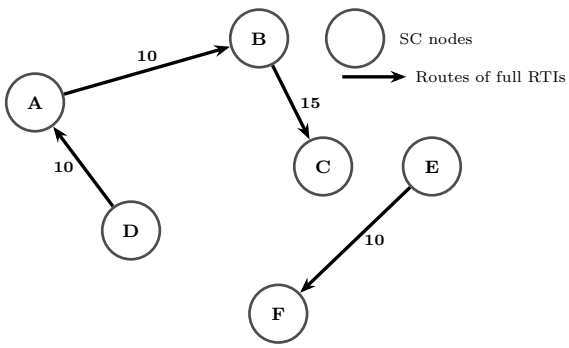

Figure 1: Full RTIs routes

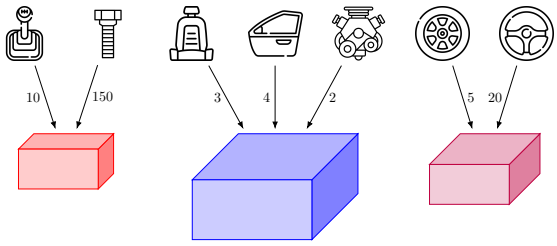

Figure 2: Product quantities per RTI

An RTI exists in one of two states: *full*, when loaded with raw materials, parts and finished goods, or *empty*, once its contents have been consumed at the destination site. Some RTIs can be folded, reducing their volume to decrease transport costs, as shown in Figure 3. The simplest RTI return strategy is a one-to-one relationship, i.e., for every shipment of full RTIs a supplier sends to a customer, the customer must return the empty RTIs along the same route, as depicted in Figure 4. This strategy is operationally straightforward, since each pair of nodes only coordinates with each other. However, it is rarely cost-optimal in large SCs, as it ignores consolidation opportunities along the SC and tends to result in both excessive empty RTIs transport costs and a larger RTI pool than strictly necessary, which implies higher RTI investment and inventory costs.

Figure 3: Full and empty folded RTIs

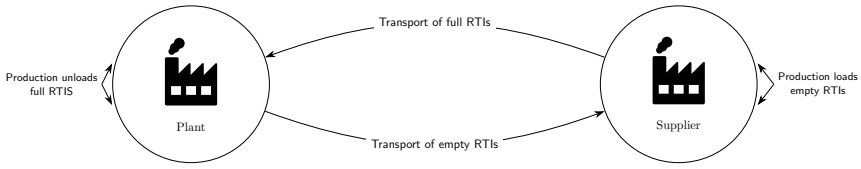

Figure 4: One-to-one RTI return strategy

When a central decision-maker, such as a dominant tier-1 manufacturer, an original equipment manufacturer (OEM) that owns the RTI pool, or a SC platform acting as manufacturing as a service (MaaS) Add reference, has visibility over the entire network, a collaborative RTI return strategy becomes possible. Rather than using a one-to-one RTI return strategy, the model optimises empty RTI routes, reducing the total distance an empty RTI journeys and consolidating routes. This simultaneously diminishes RTI return costs and the overall RTI pool size. Figure 5a shows the one-to-one baseline, while Figure 5b illustrates how an optimised collaborative strategy reduces RTI return transport costs on the same network. Determining the service network design is the primary objective of this research.

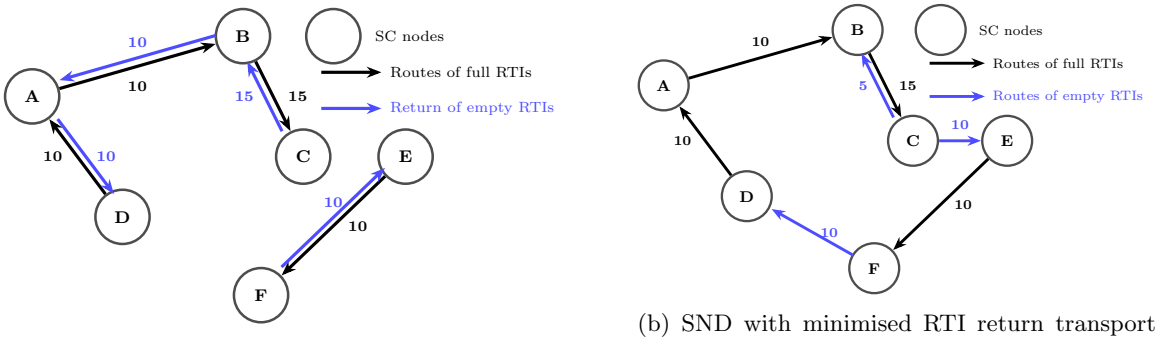

(a) *One-to-one* relationship

(b) SND with minimised RTI return transport cost

Figure 5: SND with minimised RTI return transport cost

On certain routes, full RTIs are accompanied by protective accessories, such as nets or lids, that secure parts during transit. These *inlays* are themselves reusable and must be returned to the origin site after unloading. Here the FTL and LTL, also known as groupage, transport modes are addressed.

The model takes as input data the average daily flows of full RTIs between nodes, derived from realesed production plans over a planning horizon chosen by the decision-maker, typically a month, quarter, or year. These averages are assumed to be representative of the considered planning horizon, meaning that demands are sufficiently stable daily demands for the average to serve as a reliable input data, without extreme imbalances that would render it misleading. Under this assumption, the problem can be considered a service network design for RTIs, which consists of finding the tradeoff among daily RTI transport cost, which include transport costs for both full and empty RTIs; the inventory holding cost of the RTI pool; and CO_2 emissions from RTI transport.

1. Routes for empty RTI and inlay return flows.
2. The shipment frequency per route, expressed as a *queue time* (Q-day), i.e. the number of days between consecutive dispatches.
3. The transport mode per route, i.e. FTL or LTL.
4. The total number of RTIs needed in the whole SC network.

The problem encompasses a strategic-tactical decision level, using as input data the daily averages of RTI demand flows. In practice, the daily avarage flow of full RTIs between nodes is managed by medium-to-long-term production contracts and procurement agreements, which should remain stable over the planning horizon under consideration. The Q-days and transport modes are likewise set with a medium-to-long-term frequency rather than renegotiated daily or weekly. By optimising strategic-tactical decisions for a given planning horizon, instead of multi-period decisions, the model is computationally efficient even for large industrial networks, where a fully operational multi-period optimisation could be intractable time-consumption. Here, the strategic-tactical perspective provides a scalable upper bound on the achievable savings from collaborative RTI management, by establishing tranport routes, Q-days and the RTI pool size, which can subsequently serve as input data for operational-level RTI tranport planning.

4 Model Formulation

Table 1 defines the sets, paramaters and variables of the model.

Table 1: Model nomenclature

Indices and sets	
V	Set of nodes representing manufacturing plants; $i, j \in V$
$E \subseteq V \times V$	Set of directed edges representing potential transport routes
R	Set of RTI types; $r \in R$
$\mathcal{M}$	Set of transport modes; $m \in \mathcal{M}$
$H \subseteq V$	Set of hub nodes
Parameters	

μ_{ijmpr}	Daily average demand on route (i,j) by mode m, product p, RTI type r; expressed in full RTI units
ric_{ijpr}	Fraction of full shipments on route (i,j) of product p in RTI type r that require a return inlay; independent of transport mode
bf_{ijmrp}	1 if full RTIs of type r for product p may traverse route (i,j) by mode m; 0 otherwise
be_{ijmr}	1 if empty RTIs of type r may traverse route (i,j) by mode m; 0 otherwise
bm_{ijm}	1 if mode m is available on route (i,j); 0 otherwise
bp_{ijp}	1 if product p must be transported on route (i,j); 0 otherwise
c_{ijm}	Variable transport cost per unit volume on route (i,j) by mode m
f_{ijm}	Fixed dispatch cost per shipment on route (i,j) by mode m
$v^f,\ v^e$	Volume occupied by one full (or inlay) RTI and one empty RTI, respectively
l_{ijm}	Transit time on route (i,j) by mode m, in days
$q_m^{\min},\ q_m^{\max}$	Minimum and maximum queue time for mode m, in days
$\alpha^f,\ \alpha^e$	Maintenance loss factor applied to full/inlay and empty RTIs, respectively
$ssf^i_{ijpr},\ ssf^j_{ijpr}$	Safety stock of full RTIs of type r for product p held at the origin and destination of route (i,j), respectively; independent of transport mode
$sse^i_{ijpr},\ sse^j_{ijpr}$	Safety stock of empty RTIs of type r for product p held at the origin and destination of route (i,j), respectively; independent of transport mode
$\omega_{ijm},\ \delta_{ijm}$	Minimum and maximum shipment volume on route (i,j) by mode m
$fhc_i,\ vhc_i$	Fixed activation cost and variable cost per unit volume at hub $i \in H$, respectively
s_r^{RTI}	Existing pool of RTI type r available before optimisation
p_r^{RTI}	Unit purchase cost of one RTI of type r
M	Sufficiently large constant (big-M)
Decision variables — binary	
X_{ijmr}	1 if route (i,j) carries any RTIs of type r for product p by mode m; 0 otherwise
$XF_{ijmpr},\ XI_{ijmr},\ XE_{ijmr}$	1 if route (i,j) carries full RTIs, return inlays, or empty RTIs (resp.) of type r for product p by mode m; 0 otherwise
XH_i	1 if hub $i \in H$ is activated; 0 otherwise
Decision variables — daily flow	
$N_{ijmr},\ NF_{ijmpr},\ NI_{ijmr},\ NE_{ijmr}$	Daily average number of RTIs (total), full RTIs, return inlays, and empty RTIs on route (i,j), respectively
$V_{ijmr},\ VF_{ijmpr},\ VI_{ijmr},\ VE_{ijmr}$	Daily average volume of RTIs (total), full RTIs, return inlays, and empty RTIs on route (i,j), respectively
Decision variables — per shipment	
q_{ijm}	Queue time on route (i,j) by mode m: days between consecutive dispatches
$NS_{ijmr},\ NSF_{ijmr},\ NSI_{ijmr},\ NSE_{ijmr}$	Total number of RTIs (total), full RTIs, return inlays, and empty RTIs loaded per shipment on route (i,j)
$VS_{ijmr},\ VSF_{ijmr},\ VSI_{ijmr},\ VSE_{ijmr}$	Total volume (total), full RTI volume, inlay volume, and empty RTI volume per shipment on route (i,j)
Decision variables — RTI pool	
$TNC_{ijmr},\ TNCF_{ijmr},\ TNCE_{ijmr},\ TNCI_{ijmr}$	RTIs (total), full RTIs, empty RTIs, and inlay RTIs allocated to route (i,j), covering queue stock, in-transit stock, safety stock, and losses
P_r	Additional RTIs of type r to purchase; $P_r \geq 0$
Decision variables — cost and hub	
TCS_{ijm}	Transport cost per shipment on route (i,j) by mode m
TC_{ijm}	Daily transport cost on route (i,j) by mode m
VH_i	Total daily volume handled at hub $i \in H$
CH_i	Daily handling cost at hub $i \in H$

Variables in the model carry up to five indices (see Table 1). To avoid writing three and four-level summations and writing additional constraints to encode Boolean logic, we adopt the following convention: suppressing one or more indices from a variable and placing an accent on its name produces a derived variable whose values are obtained by collapsing the suppressed indices according to one of three aggregation rules: summation ($\bar{\ }$), logical OR ($\check{\ }$), or at-most-one ($\hat{\ }$). The accent identifies which rule is applied.

Convention 1 (Index suppression and aggregation).

We call the original, fully-indexed variable the *root variable*. Each index of a root variable ranges over a set. The sets over which the retained indices range are called the *projected sets*, and their Cartesian product is denoted Π; the sets over which the suppressed indices range are called the *suppressed sets*, and their Cartesian product is denoted $\mathcal{S}$. We write $\pi \in \Pi$ for a generic element of the projected domain and $\sigma \in \mathcal{S}$ for a generic element of the suppressed domain. A derived variable is defined for every $\pi \in \Pi$ by collapsing all $\sigma \in \mathcal{S}$ according to the aggregation rule indicated by the accent.

Whenever a derived variable appears in any constraint of the model, the variable and its defining constraints (as specified by the applicable rule below) are automatically introduced into the formulation for every $\pi \in \Pi$. In other words, writing a derived variable in a constraint is a shorthand that simultaneously declares the variable and appends its linking constraints to the model; no separate definition is needed.

Rule 1 (Sum, $\bar{}$). Suppressing one or more indices and writing a $\bar{}$ over the root variable denotes the sum over the suppressed domain $\mathcal{S}$. For every $\pi \in \Pi$ the derived variable is defined by:

$$\overline{\phi}_\pi \;:=\; \sum_{\sigma \in \mathcal{S}} \phi_{\pi,\sigma} \quad \forall\, \pi \in \Pi.$$

For continuous and integer root variables the result is standard summation; for binary root variables it represents an integer count of active entries, not a Boolean sum.

Example. From the root variable NF_{ijmpr} $\big((i,j)\in E,\ m\in\mathcal{M},\ p\in P,\ \ r\in R\big)$, suppressing p ($\Pi = E \times \mathcal{M} \times R$, $\mathcal{S} = P$) and suppressing all indices ($\Pi = \varnothing$, $\mathcal{S} = E \times \mathcal{M} \times P \times R$):

$$\overline{NF}_{ijmr} \;=\; \sum_{p\in P} NF_{ijmpr} \qquad \forall\,(i,j) \in E,\ m \in \mathcal{M},\ r \in R, \tag{1}$$

$$\overline{NF} \;=\; \sum_{(i,j)\in E} \sum_{m\in\mathcal{M}} \sum_{p\in P} \sum_{r\in R} NF_{ijmpr}. \tag{2}$$

Rule 2: Positional disambiguation. When two indices range over the same set, as $i, j \in V$ do in NF_{ijmpr}, suppressing one by name alone is ambiguous. A dot ($\cdot$) marks the suppressed position: $\overline{NF}_{\cdot jmpr} := \sum_{i\in V} NF_{ijmpr}$ suppresses i, while $\overline{NF}_{i\cdot mpr} := \sum_{j\in V} NF_{ijmpr}$ suppresses j. This convention applies to all three rules below.

Rule 3 (OR, $\check{}$). **Binary root variables only.** Suppressing one or more indices and writing a $\check{}$ over the root variable symbol introduces a new binary variable equal to 1 if and only if at least one root binary sharing the same projected element π is active. For every $\pi \in \Pi$ the new variable $\check{\phi}_\pi$ is coupled to the corresponding sum $\overline{\phi}_\pi$ (Rule 1) via:

$$\check{\phi}_\pi \le \overline{\phi}_\pi \qquad \forall\, \pi \in \Pi, \tag{3}$$

$$\overline{\phi}_\pi \le |\mathcal{S}|\, \check{\phi}_\pi \qquad \forall\, \pi \in \Pi, \tag{4}$$

where $|\mathcal{S}|$ is the cardinality of the suppressed domain. Together, (3)–(4) enforce $\check{\phi}_\pi = 1 \iff \overline{\phi}_\pi \ge 1$ and, equivalently, $\check{\phi}_\pi = 0 \iff \overline{\phi}_\pi = 0$.

Example. From the binary XF_{ijmpr}, suppressing the indices m, p, and r we get ($\Pi = E$, $\mathcal{S} = P \times \mathcal{M} \times R$, $|\mathcal{S}| = |R||\mathcal{M}||P|$) yields $\check{XF}_{ij}$, which equals 1 whenever route (i,j) carries full RTIs:

$$\check{XF}_{ij} \le \overline{XF}_{ij} \qquad \forall\,(i,j) \in E, \tag{5}$$

$$\overline{XF}_{ij} \le |R||\mathcal{M}||P|\, \check{XF}_{ij} \qquad \forall\,(i,j) \in E. \tag{6}$$

Rule 4 (At-most-one, $\hat{}$). **Binary root variables only.** Suppressing one or more indices and writing a $\hat{}$ over the root variable symbol introduces a new binary variable that equals the sum and simultaneously caps it at 1, asserting that at most one root binary sharing the same projected element π may be active. For every $\pi \in \Pi$ the derived variable is coupled to the corresponding sum via:

$$\hat{\phi}_\pi \le \overline{\phi}_\pi \qquad \forall\, \pi \in \Pi, \tag{7}$$

$$\overline{\phi}_\pi \le \hat{\phi}_\pi \qquad \forall\, \pi \in \Pi. \tag{8}$$

Because $\hat{\phi}_\pi \in \{0,1\}$, both inequalities together force $\overline{\phi}_\pi \in \{0,1\}$: either no root binary is active ($\hat{\phi}_\pi = 0$) or exactly one is ($\hat{\phi}_\pi = 1$). This is equivalent to an SOS1 constraint on the group of root binaries indexed by $\mathcal{S}$ that share the same projected element π.

Example. From XF_{ijmpr}, suppressing m and r ($\Pi = E \times P$, $\mathcal{S} = \mathcal{M} \times R$) yields $\widehat{XF}_{ijp}$, which enforces that at most one mode–RTI-type pair may carry product p on route (i, j):

$$\widehat{XF}_{ijp} \leq \overline{XF}_{ijp} \qquad \forall\,(i,j) \in E,\ p \in P, \tag{9}$$

$$\overline{XF}_{ijp} \leq \widehat{XF}_{ijp} \qquad \forall\,(i,j) \in E,\ p \in P. \tag{10}$$

Table 2 lists the derived variables used in the model. The accent identifies the aggregation rule; the suppressed-indices column shows which dimensions are collapsed. Each variable and its linking constraints are introduced automatically at the point of first use.

Table 2: Derived variables used in the model.

Derived	Root	Suppr.	Rule	Interpretation
$\overline{NF}_{ijmr}$	NF_{ijmpr}	p	$^{-}$	Total daily full-RTI flow on (i, j) by mode m, type r
$\overline{N}_{i\cdot r}$	N_{ijmr}	j, m	$^{-}$	Daily outflow of RTI type r from node i †
$\overline{N}_{\cdot ir}$	N_{ijmr}	j, m	$^{-}$	Daily inflow of RTI type r into node i †
$\breve{XF}_{ijmr}$	XF_{ijmpr}	p	$\breve{}$	Any product uses full RTIs on (i, j) by m, r?
$\breve{X}_{ijm}$	X_{ijmr}	r	$\breve{}$	Mode m active on (i, j) for any RTI type?
$\breve{X}_{i\cdot}$	X_{ijmr}	j, m, r	$\breve{}$	Node i dispatches any flow? (hub activation)
$\breve{XE}_{i\cdot r}$, $\breve{XE}_{\cdot ir}$	XE_{ijmr}	j, m	$\breve{}$	Node i dispatching / receiving empties of type r?
$\widehat{XF}_{ijp}$	XF_{ijmpr}	m, r	$\widehat{}$	At most one mode–RTI-type pair for product p on (i, j)

†In the outflow variable $\overline{N}_{i\cdot r}$ the first index of the root N_{ijmr} is the focal node i and the suppressed dot replaces j; in the inflow variable $\overline{N}_{\cdot ir}$ the second index is the focal node i and the dot replaces the first index. Both derive from the same root N_{ijmr}, with the positional role of i swapped.

Objective function. The model minimises three cost components: the total daily transport cost across all routes and modes, $\overline{TC}$; the amortised purchase cost of any additional RTIs required to meet pool requirements; and the total daily hub-handling cost CH:

$$\min \quad \overline{TC} \;+\; \sum_{r \in R} p_r^{\mathrm{RTI}} \cdot P_r \;+\; \overline{CH}. \tag{11}$$

Flow conservation. RTIs circulate in a closed loop: the total daily outflow of RTI type r from any node must equal its total daily inflow:

$$\overline{N}_{i\cdot r} = \overline{N}_{\cdot ir} \qquad \forall\, i \in V,\ r \in R, \tag{12}$$

Flow–binary consistency. Each root binary is active if and only if the corresponding daily average flow is strictly positive, and only when the route is physically permissible as encoded by the b-parameters:

$$NF_{ijmpr} \leq M \cdot XF_{ijmpr}, \quad XF_{ijmpr} \leq NF_{ijmpr} \cdot bf_{ijmpr} \qquad \forall\,(i,j) \in E,\ m \in \mathcal{M},\ p,\ r \in R \tag{13}$$

$$NI_{ijmpr} \leq M \cdot XI_{ijmpr}, \quad XI_{ijmpr} \leq NI_{ijmpr} \cdot bf_{jimpr} \qquad \forall\,(i,j) \in E,\ m \in \mathcal{M},\ p,\ r \in R \tag{14}$$

$$NE_{ijmr} \leq M \cdot XE_{ijmr}, \quad XE_{ijmr} \leq NE_{ijmr} \cdot be_{ijmr} \qquad \forall\,(i,j) \in E,\ m \in \mathcal{M},\ p,\ r \in R. \tag{15}$$

$$N_{ijmr} = \overline{NF}_{ijmr} + \overline{NI}_{ijpr} + NE_{ijmr} \qquad \forall\,(i,j) \in E,\ m \in \mathcal{M},\ p,\ r \in R. \tag{16}$$

Route activation. A route is active if and only if it carries at least one RTI stream: full, empty, or inlay:

$$3 \cdot X_{ijmr} \geq \breve{XF}_{ijmr} + XE_{ijmr} + \breve{XI}_{ijmr} \qquad \forall\,(i,j) \in E,\ m \in \mathcal{M},\ p,\ r \in R \tag{17}$$

$$X_{ijmr} \leq \breve{XF}_{ijmr} + XE_{ijmr} + \breve{XI}_{ijmr} \qquad \forall\,(i,j) \in E,\ m \in \mathcal{M},\ p,\ r \in R. \tag{18}$$

Full-route activation. For any given product p, at most one RTI type r may be used on a given route. The at-most-one aggregate $\widehat{XF}_{ijp}$ therefore equals 1 if and only if product p is designated for route (i,j), as encoded by the binary parameter bp_{ijp}:

$$\widehat{XF}_{ijp} = bp_{ijp} \qquad \forall\,(i,j) \in E,\ p. \tag{19}$$

This simultaneously enforces demand-driven activation and the uniqueness of RTI type per product per route.

Transport mode selection. A mode may only be used on a route if it is physically available there, and at most one mode may operate on any given route:

$$\check{X}_{ijm} \leq bm_{ijm} \qquad \forall\,(i,j) \in E,\ m \in \mathcal{M} \tag{20}$$

$$\sum_{m \in \mathcal{M}} \check{X}_{ijm} \leq 1 \qquad \forall\,(i,j) \in E, \tag{21}$$

Hub nodes. Hub nodes $i \in H \subseteq V$ are intermediate consolidation points that aggregate outgoing flows and incur a handling cost with fixed component $fhc_i \geq 0$ and variable component $vhc_i \geq 0$ per unit volume.

At every non-hub node $i \in V \backslash H$, a node may not simultaneously receive and dispatch empty RTIs of the same type $r \in R$:

$$\widetilde{XE}_{\cdot ir} + \widetilde{XE}_{i\cdot r} \leq 1 \qquad \forall\, i \in V \backslash H, r \in R. \tag{22}$$

For every hub node $i \in H$, the binary XH_i equals 1 if and only if hub i is activated, i.e. if at least one outgoing route from i is used:

$$XH_i = \check{X}_{i\cdot} \qquad \forall, i \in H \tag{23}$$

$$CH_i = fhc_i \cdot XH_i + vhc_i \cdot \overline{V}_{i\cdot} \qquad \forall\, i \in H. \tag{24}$$

Full-RTI route flow. The daily full-RTI flow on an active route equals the prescribed demand; on an inactive route it is forced to zero:

$$NF_{ijmpr} = \mu_{ijmpr} \cdot XF_{ijmpr} \qquad \forall\,(i,j) \in E,\ m \in \mathcal{M},\ p,\ r \in R. \tag{25}$$

Inlay return flows. Where a full shipment on route (i,j) requires an inlay, that inlay is returned on the reverse route (j,i). The daily return-inlay flow is proportional to the fraction of full shipments that require one:

$$NI_{jimpr} = ric_{ijpr} \cdot \mu_{ijmpr} \cdot XF_{ijmpr} \qquad \forall\,(i,j) \in E,\ m \in \mathcal{M},\ p,\ r \in R. \tag{26}$$

Daily average volumes. Full and inlay RTIs are transported assembled and occupy volume v^f per unit; empty RTIs are collapsed or nested and occupy the smaller volume v^e per unit. The total daily volume on each route is the sum of the three streams:

$$VF_{ijmr} = \overline{NF}_{ijmr} \cdot v^f \qquad \forall\,(i,j) \in E,\ m \in \mathcal{M},\ p,\ r \in R \tag{27}$$

$$VI_{ijmr} = \overline{NI}_{ijmr} \cdot v^f \qquad \forall\,(i,j) \in E,\ m \in \mathcal{M},\ p,\ r \in R \tag{28}$$

$$VE_{ijmr} = NE_{ijmr} \cdot v^e \qquad \forall\,(i,j) \in E,\ m \in \mathcal{M},\ p,\ r \in R \tag{29}$$

$$V_{ijmr} = VF_{ijmr} + VI_{ijmr} + VE_{ijmr} \qquad \forall\,(i,j) \in E,\ m \in \mathcal{M},\ p,\ r \in R. \tag{30}$$

Per-shipment RTI counts. RTIs accumulate between consecutive dispatches; the number loaded onto each shipment therefore equals the daily average flow multiplied by the queue time. These products are *nonlinear* and will be linearised in Section **??**:

$$NSF_{ijmr} = \overline{NF}_{ijmr} \cdot q_{ijm} \qquad \forall\,(i,j) \in E,\ m \in \mathcal{M},\ p,\ r \in R \tag{31}$$

$$NSI_{ijmr} = \overline{NI}_{ijmr} \cdot q_{ijm} \qquad \forall\,(i,j) \in E,\ m \in \mathcal{M},\ p,\ r \in R \tag{32}$$

$$NSE_{ijmr} = NE_{ijmr} \cdot q_{ijm} \qquad \forall\,(i,j) \in E,\ m \in \mathcal{M},\ p,\ r \in R \tag{33}$$

$$NS_{ijmr} = NSF_{ijmr} + NSI_{ijmr} + NSE_{ijmr} \qquad \forall\,(i,j) \in E,\ m \in \mathcal{M},\ p,\ r \in R. \tag{34}$$

Per-shipment volumes. Analogously, per-shipment volumes are the daily average volumes scaled by the queue time, and are likewise nonlinear:

$$VSF_{ijmr} = VF_{ijmr} \cdot q_{ijm} \qquad \forall\,(i,j) \in E,\ m \in \mathcal{M},\ p,\ r \in R \tag{35}$$

$$VSI_{ijmr} = VI_{ijmr} \cdot q_{ijm} \qquad \forall\,(i,j) \in E,\ m \in \mathcal{M},\ p,\ r \in R \tag{36}$$

$$VSE_{ijmr} = VE_{ijmr} \cdot q_{ijm} \qquad \forall\,(i,j) \in E,\ m \in \mathcal{M},\ p,\ r \in R \tag{37}$$

$$VS_{ijmr} = VSF_{ijmr} + VSI_{ijmr} + VSE_{ijmr} \qquad \forall\,(i,j) \in E,\ m \in \mathcal{M},\ p,\ r \in R. \tag{38}$$

Queue time bounds. The queue time must lie within the operationally permitted range $[q_m^{\min}, q_m^{\max}]$ for the chosen mode; on inactive routes the queue time collapses to zero:

$$q_m^{\min} \cdot \check{X}_{ijm} \;\le\; q_{ijm} \;\le\; q_m^{\max} \cdot \check{X}_{ijm} \qquad \forall\,(i,j) \in E,\ m \in \mathcal{M}. \tag{39}$$

Shipment volume bounds. Each active shipment must meet a minimum load factor and must not exceed the vehicle capacity of the selected mode:

$$\omega_{ijm} \cdot \check{X}_{ijm} \;\le\; \overline{VS}_{ijm} \;\le\; \delta_{ijm} \cdot \check{X}_{ijm} \qquad \forall\,(i,j) \in E,\ m \in \mathcal{M}, \tag{40}$$

Total RTI pool requirements. The RTIs allocated to a route cover four components: the queue stock loaded per shipment; the in-transit stock en route; the safety stocks held at both endpoints; and a margin for maintenance losses. Safety stocks depend on the route, product, and RTI type only, and do not vary by mode. Full and inlay RTIs attract a loss factor of α^f; empty RTIs attract α^e. Inlay RTIs carry no safety-stock term because inlays are returned immediately upon receipt and are not stocked at either endpoint:

$$TNCF_{ijmr} = (1+\alpha^f)\Big(NSF_{ijmr} + l_{ijm} \cdot NF_{ijmr} + XF_{ijmr}\big(ssf^i_{ijpr} + ssf^j_{ijpr}\big)\Big) \qquad \forall\,(i,j) \in E,\ m \in \mathcal{M},\ p,\ r \in R \tag{41}$$

$$TNCE_{ijmr} = (1+\alpha^e)\Big(NSE_{ijmr} + l_{ijm} \cdot NE_{ijmr} + XE_{ijmr}\big(sse^i_{ijpr} + sse^j_{ijpr}\big)\Big) \qquad \forall\,(i,j) \in E,\ m \in \mathcal{M},\ p,\ r \in R \tag{42}$$

$$TNCI_{ijmr} = (1+\alpha^f)(NSI_{ijmr} + l_{ijm} \cdot NI_{ijmr}) \qquad \forall\,(i,j) \in E,\ m \in \mathcal{M},\ p,\ r \in R \tag{43}$$

$$TNC_{ijmr} = TNCF_{ijmr} + TNCE_{ijmr} + TNCI_{ijmr} \qquad \forall\,(i,j) \in E,\ m \in \mathcal{M},\ p,\ r \in R. \tag{44}$$

RTI purchase. If the total pool requirement across all routes exceeds the existing stock of RTI type r, the shortfall must be procured at unit cost p_r^{RTI}:

$$TNC_r \;\le\; s_r^{\mathrm{RTI}} + P_r, \qquad P_r \ge 0 \qquad \forall\, r \in R. \tag{45}$$

Daily transport costs. The cost of a single shipment on route (i,j) by mode m combines a variable charge proportional to total shipment volume and a fixed dispatch cost incurred whenever the route is active. Converting to a daily equivalent by dividing by the queue time yields the daily route cost; this division is *nonlinear* and will be linearised in Section **??**:

$$TCS_{ijm} = VS_{ijm} \cdot c_{ijm} + \overline{X}_{ijm} \cdot f_{ijm} \qquad \forall\,(i,j) \in E,\ m \in \mathcal{M} \tag{46}$$

$$TC_{ijm} \cdot q_{ijm} = TCS_{ijm} \qquad \forall\,(i,j) \in E,\ m \in \mathcal{M}. \tag{47}$$

Objective function.

$$\min \quad \sum_{(i,j)\in E} \sum_{m\in\mathcal{M}} TC_{ijm} \;+\; \sum_{r\in R} p_r^{\mathrm{RTI}} \cdot P_r \;+\; \sum_{i\in H} CH_i \tag{48}$$

Flow conservation.

$$\sum_{j\in V} \sum_{m\in\mathcal{M}} N_{ijmr} = \sum_{j\in V} \sum_{m\in\mathcal{M}} N_{jimr} \qquad \forall\, i \in V,\ r \in R \tag{49}$$

Table 3: Explicit binary variables replacing aggregation conventions

Variable	Type	Description
YF_{ijmr}	Binary	1 if any product p uses full RTIs on route (i,j) by mode m, type r; 0 otherwise.
YI_{ijmr}	Binary	1 if any product p uses inlay RTIs on route (i,j) by mode m, type r; 0 otherwise.
YM_{ijm}	Binary	1 if mode m is active on route (i,j) for any RTI type r; 0 otherwise.
$YEOUT_{ir}$	Binary	1 if node i dispatches empty RTIs of type r to any destination j by any mode m; 0 otherwise.
$YEIN_{ir}$	Binary	1 if node i receives empty RTIs of type r from any origin j by any mode m; 0 otherwise.

Flow–binary consistency.

$$NF_{ijmpr} \leq M \cdot XF_{ijmpr}, \quad XF_{ijmpr} \leq NF_{ijmpr} \cdot bf_{ijmpr} \qquad \forall\,(i,j) \in E,\ m \in \mathcal{M},\ p \in P,\ r \in R \tag{50}$$

$$NI_{ijmpr} \leq M \cdot XI_{ijmpr}, \quad XI_{ijmpr} \leq NI_{ijmpr} \cdot bf_{jimpr} \qquad \forall\,(i,j) \in E,\ m \in \mathcal{M},\ p \in P,\ r \in R \tag{51}$$

$$NE_{ijmr} \leq M \cdot XE_{ijmr}, \quad XE_{ijmr} \leq NE_{ijmr} \cdot be_{ijmr} \qquad \forall\,(i,j) \in E,\ m \in \mathcal{M},\ r \in R \tag{52}$$

$$N_{ijmr} = \sum_{p \in P} NF_{ijmpr} + \sum_{p \in P} NI_{ijmpr} + NE_{ijmr} \qquad \forall\,(i,j) \in E,\ m \in \mathcal{M},\ r \in R \tag{53}$$

Route activation.

$$3 \cdot X_{ijmr} \geq YF_{ijmr} + XE_{ijmr} + YI_{ijmr} \qquad \forall\,(i,j) \in E,\ m \in \mathcal{M},\ r \in R \tag{54}$$

$$X_{ijmr} \leq YF_{ijmr} + XE_{ijmr} + YI_{ijmr} \qquad \forall\,(i,j) \in E,\ m \in \mathcal{M},\ r \in R \tag{55}$$

Full-route activation.

$$\sum_{m \in \mathcal{M}} \sum_{r \in R} XF_{ijmpr} = bp_{ijp} \qquad \forall\,(i,j) \in E,\ p \in P \tag{56}$$

Transport mode selection.

$$YM_{ijm} \leq bm_{ijm} \qquad \forall\,(i,j) \in E,\ m \in \mathcal{M} \tag{57}$$

$$\sum_{m \in \mathcal{M}} YM_{ijm} \leq 1 \qquad \forall\,(i,j) \in E \tag{58}$$

Hub nodes.

$$YEOUT_{ir} + YEIN_{ir} \leq 1 \qquad \forall\, i \in V \backslash H, r \in R \tag{59}$$

$$CH_i = fhc_i \cdot XH_i + vhc_i \sum_{j \in V} \sum_{m \in \mathcal{M}} \sum_{r \in R} V_{ijmr} \qquad \forall\, i \in H \tag{60}$$

Demand satisfaction.

$$NF_{ijmpr} = \mu_{ijmpr} \cdot XF_{ijmpr} \qquad \forall\,(i,j) \in E,\ m \in \mathcal{M},\ p \in P,\ r \in R \tag{61}$$

Inlay return flows.

$$NI_{jimpr} = ric_{ijpr} \cdot \mu_{ijmpr} \cdot XF_{ijmpr} \qquad \forall\,(i,j) \in E,\ m \in \mathcal{M},\ p \in P,\ r \in R \tag{62}$$

Daily average volumes.

$$VF_{ijmr} = \left(\sum_{p\in P} NF_{ijmpr}\right) v^f \qquad \forall\,(i,j)\in E,\ m\in\mathcal{M},\ r\in R \tag{63}$$

$$VI_{ijmr} = \left(\sum_{p\in P} NI_{ijmpr}\right) v^f \qquad \forall\,(i,j)\in E,\ m\in\mathcal{M},\ r\in R \tag{64}$$

$$VE_{ijmr} = NE_{ijmr}\cdot v^e \qquad \forall\,(i,j)\in E,\ m\in\mathcal{M},\ r\in R \tag{65}$$

$$V_{ijmr} = VF_{ijmr} + VI_{ijmr} + VE_{ijmr} \qquad \forall\,(i,j)\in E,\ m\in\mathcal{M},\ r\in R \tag{66}$$

Per-shipment RTI counts.

$$NSF_{ijmr} = \left(\sum_{p\in P} NF_{ijmpr}\right) q_{ijm} \qquad \forall\,(i,j)\in E,\ m\in\mathcal{M},\ r\in R \tag{67}$$

$$NSI_{ijmr} = \left(\sum_{p\in P} NI_{ijmpr}\right) q_{ijm} \qquad \forall\,(i,j)\in E,\ m\in\mathcal{M},\ r\in R \tag{68}$$

$$NSE_{ijmr} = NE_{ijmr}\cdot q_{ijm} \qquad \forall\,(i,j)\in E,\ m\in\mathcal{M},\ r\in R \tag{69}$$

$$NS_{ijmr} = NSF_{ijmr} + NSI_{ijmr} + NSE_{ijmr} \qquad \forall\,(i,j)\in E,\ m\in\mathcal{M},\ r\in R \tag{70}$$

Per-shipment volumes.

$$VSF_{ijmr} = VF_{ijmr}\cdot q_{ijm} \qquad \forall\,(i,j)\in E,\ m\in\mathcal{M},\ r\in R \tag{71}$$

$$VSI_{ijmr} = VI_{ijmr}\cdot q_{ijm} \qquad \forall\,(i,j)\in E,\ m\in\mathcal{M},\ r\in R \tag{72}$$

$$VSE_{ijmr} = VE_{ijmr}\cdot q_{ijm} \qquad \forall\,(i,j)\in E,\ m\in\mathcal{M},\ r\in R \tag{73}$$

$$VS_{ijmr} = VSF_{ijmr} + VSI_{ijmr} + VSE_{ijmr} \qquad \forall\,(i,j)\in E,\ m\in\mathcal{M},\ r\in R \tag{74}$$

Queue time bounds.

$$q_m^{\min}\cdot YM_{ijm} \;\le\; q_{ijm} \;\le\; q_m^{\max}\cdot YM_{ijm} \qquad \forall\,(i,j)\in E,\ m\in\mathcal{M} \tag{75}$$

Shipment volume bounds.

$$\omega_{ijm}\cdot YM_{ijm} \;\le\; \sum_{r\in R} VS_{ijmr} \;\le\; \delta_{ijm}\cdot YM_{ijm} \qquad \forall\,(i,j)\in E,\ m\in\mathcal{M} \tag{76}$$

Total RTI pool requirements.

$$TNCF_{ijmr} = (1+\alpha^f)\left(NSF_{ijmr} + l_{ijm}\cdot\sum_{p\in P} NF_{ijmpr} + XF_{ijmr}\big(ssf^i_{ijpr} + ssf^j_{ijpr}\big)\right) \qquad \forall\,(i,j)\in E,\ m\in\mathcal{M},\ p\in P,\ r\in R \tag{77}$$

$$TNCE_{ijmr} = (1+\alpha^e)\Big(NSE_{ijmr} + l_{ijm}\cdot NE_{ijmr} + XE_{ijmr}\big(sse^i_{ijpr} + sse^j_{ijpr}\big)\Big) \qquad \forall\,(i,j)\in E,\ m\in\mathcal{M},\ p\in P,\ r\in R \tag{78}$$

$$TNCI_{ijmr} = (1+\alpha^f)\left(NSI_{ijmr} + l_{ijm}\cdot\sum_{p\in P} NI_{ijmpr}\right) \qquad \forall\,(i,j)\in E,\ m\in\mathcal{M},\ p\in P,\ r\in R \tag{79}$$

$$TNC_{ijmr} = TNCF_{ijmr} + TNCE_{ijmr} + TNCI_{ijmr} \qquad \forall\,(i,j)\in E,\ m\in\mathcal{M},\ p\in P,\ r\in R \tag{80}$$

RTI purchase.

$$\sum_{(i,j)\in E}\sum_{m\in\mathcal{M}}\sum_{p\in P} TNC_{ijmr} \le s_r^{\mathrm{RTI}} + P_r, \qquad P_r \ge 0 \qquad \forall\, r\in R \tag{81}$$

Daily transport costs.

$$TCS_{ijm} = \left(\sum_{r\in R} VS_{ijmr}\right) c_{ijm} + \left(\sum_{r\in R} X_{ijmr}\right) f_{ijm} \qquad \forall\,(i,j)\in E,\ m\in\mathcal{M} \tag{82}$$

$$TC_{ijm}\cdot q_{ijm} = TCS_{ijm} \qquad \forall\,(i,j)\in E,\ m\in\mathcal{M} \tag{83}$$

Logical Linking Constraints.

$$YF_{ijmr} \le \sum_{p\in P} XF_{ijmpr} \qquad \forall\,(i,j)\in E,\ m\in\mathcal{M},\ r\in R \tag{84}$$

$$\sum_{p\in P} XF_{ijmpr} \le |P|\cdot YF_{ijmr} \qquad \forall\,(i,j)\in E,\ m\in\mathcal{M},\ r\in R \tag{85}$$

$$YI_{ijmr} \le \sum_{p\in P} XI_{ijmpr} \qquad \forall\,(i,j)\in E,\ m\in\mathcal{M},\ r\in R \tag{86}$$

$$\sum_{p\in P} XI_{ijmpr} \le |P|\cdot YI_{ijmr} \qquad \forall\,(i,j)\in E,\ m\in\mathcal{M},\ r\in R \tag{87}$$

$$YM_{ijm} \le \sum_{r\in R} X_{ijmr} \qquad \forall\,(i,j)\in E,\ m\in\mathcal{M} \tag{88}$$

$$\sum_{r\in R} X_{ijmr} \le |R|\cdot YM_{ijm} \qquad \forall\,(i,j)\in E,\ m\in\mathcal{M} \tag{89}$$

$$XH_i \le \sum_{j\in V}\sum_{m\in\mathcal{M}}\sum_{r\in R} X_{ijmr} \qquad \forall\, i\in H \tag{90}$$

$$\sum_{j\in V}\sum_{m\in\mathcal{M}}\sum_{r\in R} X_{ijmr} \le |V||\mathcal{M}||R|\cdot XH_i \qquad \forall\, i\in H \tag{91}$$

$$YEOUT_{ir} \le \sum_{j\in V}\sum_{m\in\mathcal{M}} XE_{ijmr} \qquad \forall\, i\in V,\ r\in R \tag{92}$$

$$\sum_{j\in V}\sum_{m\in\mathcal{M}} XE_{ijmr} \le |V||\mathcal{M}|\cdot YEOUT_{ir} \qquad \forall\, i\in V,\ r\in R \tag{93}$$

$$YEIN_{ir} \le \sum_{j\in V}\sum_{m\in\mathcal{M}} XE_{jimr} \qquad \forall\, i\in V,\ r\in R \tag{94}$$

$$\sum_{j\in V}\sum_{m\in\mathcal{M}} XE_{jimr} \le |V||\mathcal{M}|\cdot YEIN_{ir} \qquad \forall\, i\in V,\ r\in R \tag{95}$$