An optimisation approach for supply chain procurement transport operational planning with 3D full-truck loading constraints and returnable transport items

This paper proposes a new mixed integer linear mathematical programming (MILP) model, dubbed 3D-SCPTOP, for procurement transport planning in manufacturing supply chains. The model effectively integrates procurement and transport decisions while accounting for three-dimensional full-truck loading constraints and managing returnable transport items (RTIs). Thus, we optimise the material to procure for an assembly manufacturing site, RTIs closed-loop management, and the involved transport decisions, including the truck loading configuration. Procurement transport decisions are based on the demand of assemblers, the supplier's inventory levels, and the dimensions of the truck / RTIs. The optimisation model aims to minimise transportation and inventory costs. As the 3D loading problem is NP-hard, a matheuristic (Math-3D-SCPTOP) approach is developed to obtain good quality solutions for large instances in an efficient computational time. The 3D-SCPTOP model was validated with a case study in an automotive seating first-tier supplier. Regarding inventory and transport efficiency, the results of the 3D-SCPTOP model are superior to the company procedures.

Keywords— Procurement, inventory, transport planning, full-truckload, 3D container loading

1 Introduction

Optimizing the use of resources in manufacturing supply chains is crucial for boosting economic growth, improving social well-being, and minimizing environmental impact. Integrating transport, inventory, and production processes is a fundamental characteristic of supply chains (Stadtler, Kilger, and Meyr 2015) because joint decisions will improve supply chain performance(Díaz-Madroñero, Mula, and Peidro 2017).

Procurement refers to the process of acquiring goods and services in a supply chain (Chopra and Meindl 2015). One of the main goals of procurement is to obtain raw materials, parts or finished goods for a factory or distribution centre from a supplier. As mentioned in (Fleischmann, Kopfer, and Sürie 2015), the responsibility for transport planning usually lies with the supplier. However, sometimes the manufacturer makes transport decisions of its supplies in, for example, the automotive industry. Furthermore, an essential asset in the automotive supply chain is not considered in traditional material requirement planning (MRP): returnable containers or returnable transport items (RTI), which are used as tertiary packaging. RTIs enable the storage and transportation of RM and FG through the supply chain. Usually, the manufacturing plant supplies empty RTIs to its supplier, while the supplier delivers full RTIs with the FG or RM. Therefore, during the procurement process, transport and inventory decisions should be integrated, including RTI management. Here, we focus on optimising the operational decisions made during procurement transport planning.

According to (Díaz-Madroñero, Peidro, and Mula 2014), using algorithm-based methods for procurement transport planning is more effective than relying on manual approaches based on planners' intuition. Manual planning can be short-sighted and lead to less efficient outcomes. This becomes even more significant when optimizing procurement transport tasks that aim to reduce the number of trucks and inventory levels, especially under 3D loading constraints where the precise placement of containers within trucks must also be determined (cite). Furthermore, the capacity constraints used in the scientific literature on procurement transport planning are based mainly on freight volume or the total number of loaded product units (Hashemi-Amiri, Ghorbani, and Ji 2023) and (Díaz-Madroñero, Peidro, and Mula 2014). The current research seeks to address this gap by introducing a new mixed-integer linear programming (MILP) model. This model uniquely combines procurement transportation with considerations for 3D loading, inventory management,

and RTI management. Hereafter, we refer to this model formulation as 3D supply chain procurement transport operational planning (3D-SCPTOP). Additionally, a matheuristic procedure (MATH-3D-SCPTOP) is researched.

In this paper, we present three main contributions: (i) formulating a novel MILP model, 3D-SCPTOP, that integrates procurement transport, RTI management and inventory decisions with 3D full-truck loading constraints; (ii) developing a matheuristic, Math-3D-SCPTOP, to solve the 3D-SCPTOP model in a reasonable time, which is to be used for real-world instances; (iii) validating and testing the 3D-SCPTOP model with a case study at a first-tier supplier of the automotive sector.

Readers are referred to the typology by (Wäscher, Haußner, and Schumann 2007) for a global view of container loading problems, where the different dimensions of the loading problem are described. Furthermore, (Silva, Toffolo, and Wauters 2019) summarise the exact methods used in the literature to solve container loading problems, and (X. Zhao et al. 2016) explore other solution approaches in the literature. Readers are also referred to the literature reviews of (Mosca, Vidyarthi, and Satir 2019) and (Díaz-Madroñero, Peidro, and Mula 2015), which focus more on integrating inventory decisions and transport. Here, we jointly address container loading, procurement transport and inventory decisions. Furthermore, we refer readers () for insights about the packaging methods used in supply chains.

The paper is organised as follows. Section 2 provides a literature review related to the problem under study. Section 3 presents the problem description. Section 4 describes the 3D-SCPTOP MILP formulation and the developed matheuristic solution approach, MATH-3D-SCPTOP. Section 5 validates and experiments with the proposal in a real case study. Finally, Section 6 concludes and puts forward further research lines.

2 Literature Review

The goal of this research is to integrate procurement transport operational planning decisions with 3D loading restrictions and RTI packaging. Based on the authors' research, no previous work has been identified that meets this criterion. Therefore, three independent, but sometimes overlapping, knowledge bodies have been reviewed: procurement transport and inventory planning, container loading problems and RTI literature.

2.1 Procurement transport and inventory planning

Models that integrate transport and inventory costs during the procurement process are widely studied in the literature. As noted in (Langley et al. 2020), transportation facilitates the movement of raw materials and finished products between suppliers, warehouses, manufacturers, and retailers. Therefore, transport processes play a crucial role in supply chains. (Fleischmann, Kopfer, and Sürie 2015) distinguish between two main types of transportation within a supply chain: "procurement transport," which involves moving materials from suppliers to manufacturing sites, and the "distribution of goods," which concerns delivering finished products from factories to customers. This article focuses specifically on addressing the challenges related to procurement transportation.

There are two main dimensions of procurement transport problems according to the supply chain configuration and the applied transport method. Regarding supply chain configurations (Mosca, Vidyarthi, and Satir 2019): (i) single source to a single destination (SS); (ii) multiple sources to a single destination (MS); (iii) single source to multiple destinations (SM); (iv) multiple sources to multiple destinations (MM). Source components determine the number of supplier locations that are taken into account, while destination components denote the number of supplied manufacturers. Additionally, different transport methods are identified in (Díaz-Madroñero, Peidro, and Mula 2014):milk run, less-than-truckload (LTL), full-truckload (FTL) . We also analyze the formulation of the transportation capacity constraints in the scientific literature.

(Berman and Wang 2006) address the problem of optimising distribution strategies to deliver products from suppliers to plants, whose aim is to minimise transport, pipeline and plant inventory costs by using cross docks. A mixed integer non-linear programming (MINLP) formulation, a Lagrangian relaxation heuristic, a greedy heuristic, and a branch-and-bound algorithm are proposed to model and solve the problem.

(Sancak and Salman 2011) present a MILP model to optimise procurement transport decisions in a SS supply chain configuration using LTL and FTL transport methods. The objective is to minimise transport and inventory holding costs, while fulfilling production plan requirements on a multiperiod planning horizon. The study explores the possibility of delaying LTL shipments to the subsequent time period, and utilising safety stocks whenever necessary, in a stochastic environment by employing data from a bus manufacturer. The findings demonstrate that delaying shipments leads to reduced holding and transport costs with a minimal stockout risk.

(Schöneberg, Koberstein, and Suhl 2010) examine the concept of delivery profiles, which define the delivery frequency at a fixed rate, offering structured planning, minimizing management effort, and improving coordination in logistics. In this context, FTL transport is used when the goods' volume exceeds a vehicle's capacity, making direct shipment possible. LTL is applied when the volume is insufficient to fill a truck, and the goods are first sent to a consolidation center before reaching the final destination. In (Schöneberg, Koberstein, and Suhl 2013), the proposed model accounts for demand uncertainty.

(Díaz-Madroñero, Mula, and Peidro 2014) present a fuzzy multi-objective integer linear programming (FMOILP) model that focuses on operational procurement transport planning in an automotive supply chain, which involves a single source and a single destination while utilising FTL. The developed model aims to minimise the number of trucks employed for procurement transport and the inventory level by considering the uncertainties related to transport capacity levels.

(Hein and Almeder 2016) investigate the benefits of integrated procurement transport and production planning for supply and production processes by comparing a sequential approach, where production is firstly determined, followed by procurement transport decisions, plus an integrated approach in which decisions are jointly made. Numerical experiments reveal that the integrated planning approach leads to substantial cost savings.

(Díaz-Madroñero, Mula, and Peidro 2017) present an novel MILP model that integrates procurement, production and transport planning decisions within manufacturing systems. This model extends beyond traditional material requirement planning (MRP) systems by incorporating procurement transport decisions from multiple sources and a single destination into a unified optimization framework. It considers the capacities of both material and production resources, along with procurement transport planning decisions, by employing various shipping modes such as FTL, LTL, and milk-run.

(Chitsaz, Cordeau, and Jans 2019) address integrating production, inventory and procurement transport into a manufacturing context by defining this problem as an assembly routing problem (ARP). It introduces a novel MILP model for the ARP and proposes a three-phase decomposition matheuristic for its solution.

(Baller et al. 2022) examine the optimization of procurement transport in an automotive factory, focusing on first-tier suppliers at an aggregate level across multiple sources (570) to a single destination, using FTL, LTL, and courier express service (CES) as transportation methods. The proposed MILP approach includes a cyclic inventory constraint, truck utilization, and storage limitations.

(Hashemi-Amiri, Ghorbani, and Ji 2023) propose an integrated approach to optimize a perishable food supply chain. The model combines supplier selection, procurement and distribution transport, production scheduling, and vehicle routing to improve supply chain efficiency and resilience. It handles demand uncertainties through a distributionally robust chance-constrained model. The model is reformulated as MILP by utilizing duality and linearization techniques.

2.2 Procurement Transport with RTIs

Some models further integrate the procurement and delivery of RTIs into the procurement transport literature. In this sense, RTIs are procured to the supplier, who loads the items and sends them to customer. We extend the SC definitions previously defined to contemplate the RTIs management strategies.

model a food closed-loop supply chain network design problem incorporating returnable transport items (RTIs), product perishability, facility location and demand uncertainty. A two-stage non-linear chance-constrained programming model minimizes fixed facility, production, transport, inventory holding and RTI costs while ensuring a target service level. It's linearized via sample average approximation and distribution-free methods to capture forward RTI-based shipments and reverse flows for reuse. To solve large instances, an improved Lagrangian relaxation algorithm decomposes facility-location and flow decisions, outperforming CPLEX on solution quality and speed.

(Soysal et al. 2023) develop a tactical-level, multi-period closed-loop Vendor-Managed Inventory (VMI) system for RTIs in an agro-food SC. The SM SC integrates forward flows of full RTIs from a single vendor to multiple customers and reverse flows of empties back to the vendor for cleaning . All routing and inventory decisions are made centrally by the vendor under full information sharing. Sustainable plans in terms of amounts of energy spent and empty crates collected are devised and evaluated.

(Guo et al. 2024) model two-tier Container Management Centre (CMC) network . Empty RTIs are dispatched from central CMC hubs to upstream suppliers, loaded with products, carried by truck to downstream customers, then returned empty to regional CMCs for cleaning and storage before being shipped back to central hubs. A neural network is used for demand forecasting. A MILP is proposed that maximises total profit by optimally determining transport costs and the penalties applied to late RTIs returns.

(Y. Zhang et al. 2024) formulate a perishable-food inventory-routing MILP with multiple RTI types in a SM supply chain, integrating procurement of products and pickup of both filled and empty RTIs. Decisions

are made on a operational level, optimally determining per period the quantities to pack, deliver, pick up, purchase and lose, as well as the vehicle routes in order to maximise the total profit of the SC that is equal to the total quality-dependent revenue minus the total costs involved, including inventory holding costs, product cost, transportation costs, and RTI purchasing and loss costs. The model is solved exactly via CPLEX solver and approximately via a tailored Kernel Search matheuristic.

2.3 Container loading

Container loading problems encompass a subset of geometric assignment problems known as cutting and packing ($C\&P$) problems. They revolve around the allocation of n-dimensional orthotope items in larger n-dimensional orthotope containers. Here the aim is to optimise an objective function while taking into account two key geometric constraints: complete containment of items inside containers and lack of item overlap. A loading pattern serves as a formal representation of a solution to such an assignment problem. Dyckhoff introduced in (Dyckhoff 1990) a typology that unifies $C\&P$ problems using four different criteria: dimensionality of space, the objective of assignment, containers types and box type. Consequently, (Wäscher, Haußner, and Schumann 2007) develop a new typology that has become the standard in the $C\&P$ literature. We briefly describe the typology used in (Wäscher, Haußner, and Schumann 2007) based on five different criteria: (i) dimensionality of space; (ii) kind of assignment (input minimisation of containers for all small items and loading patterns; output maximisation to pack a subset of small items with limited container availability;) (iii) assortment of small item by distinguishing if they are either a weakly (or strongly) heterogeneous assortment or identical small items ; (iv) assortment of large objects (if it is either several large objects or one large object); (v) shape of small items (circular or of another shape). Table 1 links the standard $C\&P$ nomenclature and the criteria of the typology according to (Wäscher, Haußner, and Schumann 2007).

Table 1: $C\&P$ nomenclature and criteria

<table>
<tr><td colspan="2">Assortment of small items</td><td>Identical</td><td colspan="2">Weakly hetereogenous</td><td colspan="2">Strongly heterogenous</td></tr>
<tr><td colspan="2">Objective</td><td>Output maximization</td><td>Input minimization</td><td>Output maximization</td><td>Input minimization</td><td>Output maximization</td></tr>
<tr><td colspan="2">Assortment of large items</td><td></td><td></td><td></td><td></td><td></td></tr>
<tr><td rowspan="4">Fixed Dimensions</td><td>Identical</td><td rowspan="3">X</td><td>Single Stock Size Cutting Stock Problem (SSSCSP)</td><td>Multiple Identical Large Object Placement Problem (MILOPP)</td><td>Single Bin Size Bin Packing Problem (SBSBPP)</td><td>Multiple Identical Knapsack Problem (MIKP)</td></tr>
<tr><td>Strongly heterogeneous</td><td>Residual Cutting StockProblem (RCSP)</td><td rowspan="2">Multiple Heterogenous Large Object Placement Problem (MHLOPP)</td><td>Residual Bin Packing Problem (RBPP)</td><td rowspan="2">Multiple Heterogeneous Knapsack Problem (MHKP)</td></tr>
<tr><td>Weakly hetereogenous</td><td>Multiple Stock Size Cutting Stock Problem (MSSCSP)</td><td>Multiple Bin Size Bin Packing Problem (MBSBPP)</td></tr>
<tr><td>One large object</td><td>Identical Item Packing Problem (IIPP)</td><td>X</td><td>Single Large Object Placement Problem (SLOPP)</td><td>X</td><td>Single Knapsack Problem (SKP)</td></tr>
<tr><td>Variable dimension</td><td>One large object</td><td>X</td><td>Open Dimension Problem (ODP)</td><td>X</td><td>Open Dimension Problem (ODP)</td><td>X</td></tr>
</table>

The first mathematical programming model in a scientific journal to describe the container-loading problem was developed in (C. S. Chen, Lee, and Shen 1995), where the authors introduced an MILP model to address the 3D input minimisation problem by considering rotations and containers of varying dimensions. However, it does not specify the use of weakly or strongly heterogeneous boxes or containers. Additionally, real-world constraints are modelled like, for example, weight distribution.

(Junqueira, Morabito, and Sato Yamashita 2012b) propose an alternative MILP formulation to (C. S. Chen, Lee, and Shen 1995) using binary encoding for box position, which utilises normal patterns to reduce possible box coordinates by considering multiples of boxes dimensions and ensuring optimal solutions. Additionally, loading and cargo constraints are developed to ensure the static and dynamic stability of the cargo. Boxes must be supported by other box top faces or the container floor. The same authors integrate further loading restrictions in (Junqueira, Morabito, and Sato Yamashita 2012a), where they integrate multidrop

constraints, which address the challenge of packing a truck with boxes for different customers at various destinations. The goal is to plan the container's loading to minimise the time spent unloading and reloading boxes at each destination.

(W. Zhu and Lim 2012) devise a tree search-based method to solve SLOPP and SKP with 3D constraints. Their approach involves evaluating free spaces by employing a look-ahead tree search and selecting optimal placements based on the best free space-block pairs.

(Gonçalves and Resende 2013) develop a biased random-key genetic algorithm (BRKGA) designed to solve SBSBPP. The algorithm addresses geometric constraints and introduces a maximal-space representation to handle available free spaces in bins. A novel placement procedure is hybridised with the BRKGA, which optimises the order of box packing and the parameters utilised by the placement procedure to offer an effective solution approach to an NP hard problem.

(Bortfeldt and Wäscher 2013) identify constraints for $C\&P$, including item-related constraints (orientation constraints, load bearing, loading priorities), container-related constraints (weight distribution and weight limit), and cargo-related constraints (complete-shipment constraints) and load-related constraints (complexity constraints or stability constraints). The study also highlights the achievements and deficits in container loading research that pertain to these constraints.

(Paquay, Schyns, and Limbourg 2016) propose an MILP model for the MBSBPP. One noteworthy constraint is the assumption that containers are truncated parallelepiped instead of rectangular boxes. They also consider constraints, such as box rotation, container load bearing, weight distribution, stability and fragility of items.

(Mahvash, Awasthi, and Chauhan 2018) introduce a novel resolution procedure for the SBSBPP through the column generation technique, where the columns that are generated are the loading configurations of a single bin. For the pricing develop problem they develop a heuristic to find new columns with a negative reduced cost. This approach not only produces better results than the previous articles on the literature, but also gives new lower bounds.

(Silva, Toffolo, and Wauters 2019) study SSLOP models with 3D constraints. These authors compare the different approaches that exist in the literature for model packing problems based on two fundamental approaches: discretised formulation (Junqueira, Oliveira, et al. 2013) and continuous formulation (C. S. Chen, Lee, and Shen 1995) with subsequent modifications. They also indicate that discretised formulation(Junqueira, Morabito, and Sato Yamashita 2012a) performs the best for instances with similar sized boxes. However, it encounters memory limitations for large instances. For other sets of instances, the adapted formulations of (C. S. Chen, Lee, and Shen 1995) and (Paquay, Schyns, and Limbourg 2016) outperform other adaptations. Further research topics suggest including the design of new formulations by considering the limited approaches in the literature.

(Kurpel et al. 2020) introduce techniques and exact approaches to solve input minimisation and output maximisation problems for container-loading problems. Their methods consider practical constraints, such as orientation, separation of boxes and vertical stability. A set partitioning method is also employed in order to obtain upper bounds in a container-loading input minimisation problems. The authors adapt and evaluate four discretisation methods found in the existing literature and incorporate mathematical formulations to address the aforementioned constraints.

(Alonso, Alvarez-Valdes, and Parreño 2020) develop an algorithm by the greedy randomised adaptive search procedure (GRASP) to tackle a practical container-loading problem with time-sensitive constraints. Their approach addresses dynamic stability constraints while stacking products on pallets and loading them onto trucks during different time periods. Their approach provides high-quality solutions and surpasses an integer programming formulation in efficiency and effectiveness terms.

(Ali et al. 2022) conduct a comprehensive literature review by identifying constraints and solution methods for offline problems with full knowledge of the items to be packed and those tackling the online problems, where items are packed immediately when they arrive, and no prior knowledge of an item is known. The study also identifies and classifies solution approaches for offline packing into six categories: exact methods, constructive heuristics; local search and metaheuristic methods; approximation algorithms; machine learning and hyper-heuristic methods; tree search methods. (Harrath 2022) proposed a thee stage heuristic based on layer generation to find good quality solutions the SBSPP problem for large instance up to 993 bins and 200000 items taking into account load balancing constraints.

(Tresca et al. 2022) develop a matheuristic to solve the SBSBPP that includes items with different IDs and different categories, to be delivered to different clients. The algorithm creates monoitem, monocategory, and mixed layers which then are used to compute the final loading configurations of the bins.

(Li, M. Chen, and Huo 2022) develope a hybrid adaptaive large neighborhood search algoritm to solve the multiple container loading problem, which is tries pack a given set of items with the minimum number of containers while maximazing the space utilization of them. Therfore, it is both a MBSBPP and a MSSCSP.

Their approach takes into account some practical applications such as supsension constraints, rotation and weight limit.

(M. Chen, Huo, and Duan 2023) present a new approach to the 3D-BPP, introducing the 3D-BSDPP which focuses on optimizing both the design of bin sizes and the packing process. A novel Hybrid Biogeography-Based Optimization (HBBO) algorithm is proposed, integrating differential evolution and a local search strategy for enhanced performance.

One noteworthy trend in $C\&P$ is integrating loading problems with routing. This is known as capacitated vehicle-routing problem with 3D or 2D loading constraints (3L-CVRP or 2L-CVRP). (Junqueira, Morabito, and Sato Yamashita 2012b) present a MILP model with binary encodings for 3L-CVRP by including loading, cargo and multidrop constraints. The combination of these two NP-hard problems requires using heuristics and metaheuristics for real-world instances, as seen in (Dominguez et al. 2016), (Alonso, Martinez-Sykora, et al. 2022) and (Wei et al. 2015). Another noteworthy trend is to use reinforcement learning techniques to solve $C\&P$, as in (Que, Yang, and D. Zhang 2023) and (H. Zhao, C. Zhu, and Huang 2022).

2.4 Research Gaps & Methodology

Here, we discuss the main differences between the 3D-SCPTOP model proposal and those reviewed by specifically focusing on procurement transport. The key distinction of the 3D-SCPTOP model compared to the existing literature is the incorporation of 3D constraints and vertical stability constraints to model transport capacity with a view to providing more realistic solutions and reducing the likelihood of infeasible outcomes. Table 2 presents a comparison of inventory modelling, transport modelling, and supply chain configuration between the 3D-SCPTOP model proposal and those currently in the literature. Hence, the 3D-SCPTOP approach is based on a SS supply chain configuration, and takes into account the FTL transportation mode.

Article	SC Configuration	Decision level	Transportation Mode	Transportation Capacity Constraint	Transportation Cost	Inventory Capacity Restriction	RTIs	Inventory Costs	Safety Stocks	Modelling Framework
(Guo et al. 2024)	MM	TO	FTL	UH	X	X	S—NF	X		MINLP
(Berman and Wang 2006)	MM	T	FTL—LTL	V	X			X		MINLP
(Sancak and Salman 2011)		O	LTL—FTL	V	X			X	X	MILP
(Schöneberg, Koberstein, and Suhl 2010)	MS	T	FTL—LTL	V	X	X		X		MILP
(Schöneberg, Koberstein, and Suhl 2013)	MS	O	FTL—LTL	V	X	X		X		MILP
(Díaz-Madroñero, Mula, and Peidro 2014)	SS	O	FTL	UH	X			X	X	FMOILP
(Hein and Almeder 2016)	MS	O	MR	V	X			X		MILP
(Díaz-Madroñero, Mula, and Peidro 2017)	MS	T	FTL—LTL—MR	V	X	X		X	X	MILP
(Meyer and Amberg 2018)	MS	T—O	MR—FTL	V	X	X		X		MILP
(Chitsaz, Cordeau, and Jans 2019)	MS	O—T	MR	V	X	X		X		MILP
(Baller et al. 2022)	MS	O	MR—FTL—LTL—CES	V—W	X	X			X	MILP
(Hashemi-Amiri, Ghorbani, and Ji 2023)	MS	T	MR	V	X					CCP
3D-SCPTOP	SS	O	FTL	3D-Constraints	X	X		X	X	MILP
(Y. Zhang et al. 2024)	MS	TO	MR	UH	X	X	M—NF	X		ILP

Abbreviations. **T** (tactical), **O** Operational; **FTL** (full-truck load), **LTL** (less-than-truck load), **MR** (milk-run), **CES** (courier express service); **V** (volumetric), **W** (weight), **UH** Unit Holding; **CCP** chance-constrained programming

Table 2: Comparison of procurement transport models

On the other hand, the 3D-SCTOP model diverges from those proposed in the packaging literature in several aspects. Firstly, the loading problem takes into account different time periods. Therefore, the specific container (small items or boxes in the $C\&P$ literature) that we utilise are yet to be defined, as the choice of container depends on the inventory levels of each product. Also, the objective function depends on inventory and transport costs, which are inherently connected to the loading problem at hand. Thefore, we simultaneously solve an input minimisation and output maximisation problem. Both of these are a result of transport minimisation and inventory costs. Input minimisation comes because we want to find the minimum number of trucks needed. Meanwhile, output maximization comes from the FTL and the transport costs.

Based on the literature review and the identified research gaps, our proposal is structured according to the steps depicted in Figure 1.

Article	Problem type	Resolution procedure	Orientation	Weight	Load Balance	Stability	Time-Depenent
(W. Zhu and Lim 2012)	SLOP—SKP	TSM	X	X			
(Gonçalves and Resende 2013)	SBSBPP	BRKGA	X	X		X	
(Paquay, Schyns, and Limbourg 2016)	SBSBPP	EM	X	X	X	X	
(Mahvash, Awasthi, and Chauhan 2018)	SBSBPP	CG	X	X			
(Alonso, Alvarez-Valdes, and Parreño 2020)	SSSCSP	GRASP	X	X	X	X	X
(Tresca et al. 2022)	SBSBPP	MH	X	X	X	X	
(Harrath 2022)	SBSBPP	H	X	X	X		
(Li, M. Chen, and Huo 2022)	SBSBPP—MSSCSP	HALNs	X	X		X	
(M. Chen, Huo, and Duan 2023)	BSDPP	HBBO	X	X			
3D-SCPTOP	SSSCSP & MILOPP	MH	X	X	X	X	X

Abbreviations. **T**SM (Tree search method), **BRKGA** Biased Randomized Jey Genetic Algorithm; **EM** (Exact Metods), **MH** (MatHeuristic), **CG** (Column Generation), **H** (Heuristic); **HCLP** (Hybrid Adaptive Large Neighborhood Search), **HBBO** (Hybrid Biogeography-Based Optimization)

Table 3: Comparison of C&P problems

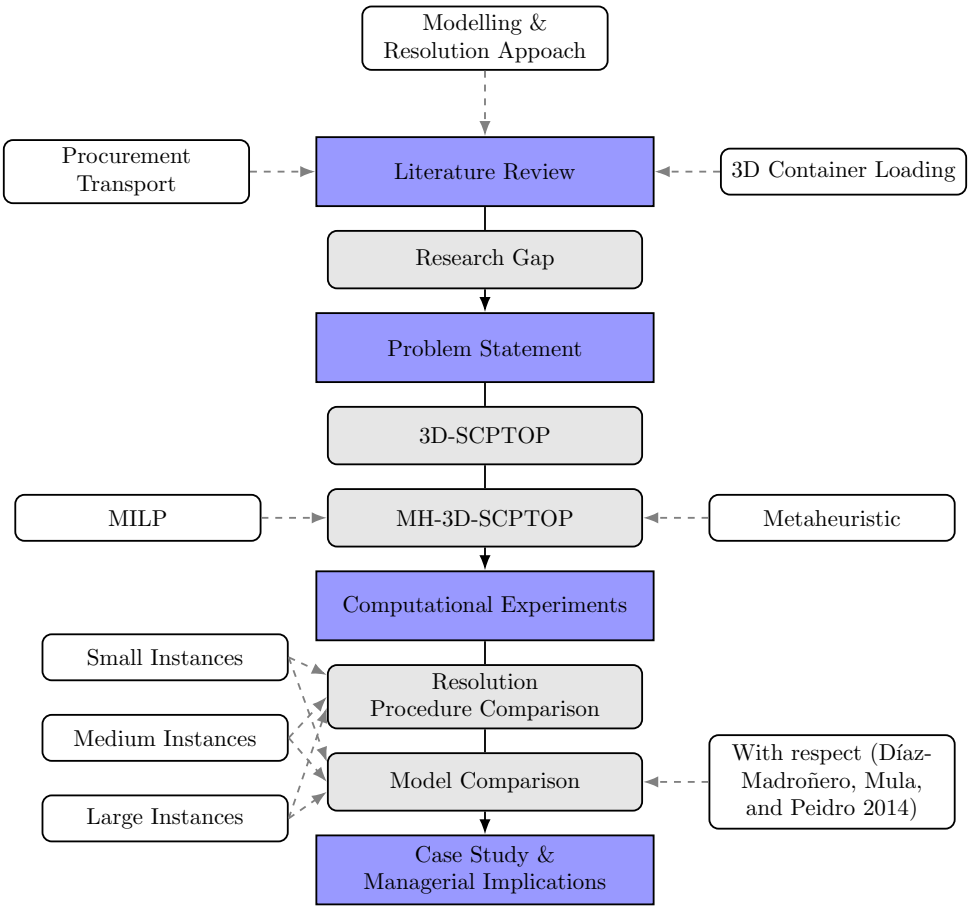

Figure 1: Research Methodology

3 Problem Description

The main objective of the presented problem is to minimise the transportation and inventory holding costs of a manufacturing site by integrating procurement transport, RTI management and inventory decisions with 3D full-truck loading constraints. The supply chain under study has a single source and a single destination. FTL is employed as the mode of transport. Products are shipped in different RTI types. RTIs are transported inside trucks, and the loading configuration is determined. Therefore, a distinction is made to the classic nomenclature of $C\&P$ problems. Hereafter, small objects are RTIs and large objects are trucks.

The assembler's demand drives the procurement process because it determines the optimal quantity of the products to procure from the supplier to the manufacturing site. Raw materials and assembled parts are produced at the supplier following the production plan. Then, they are packed in their corresponding

RTI. The full RTIs with RM and AP are transported using an FTL mode of transport with 3D loading constraints. Each RTI can only carry the same product type at a given time. Furthermore, each RM or AP can only be shipped in one RTI type. Once the full RTIs are at the plant, the RM and AP are used for production, and the RTIs are emptied. Once emptied, they are folded and shipped back to the supplier using FTL transport with 3D loading constraints. Figure 2 is an example of the assignment of RM and AP to RTI types, where three container types and six product types are represented in different colours. The arrow indicates the amount of product that can be shipped in the containers.

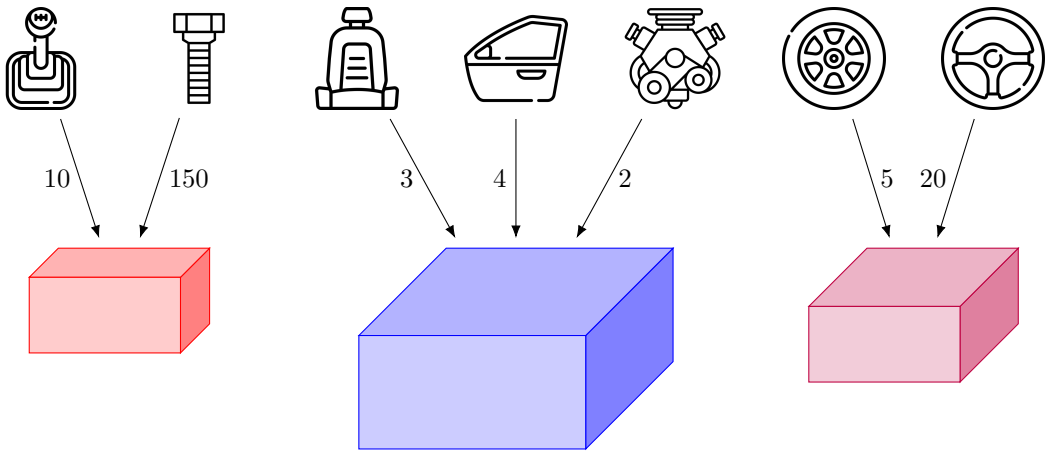

Figure 2: Product to type of reusable container

In our problem, two distinct transport decisions are made: procuring RM and AP for the manufacturing plant with full RTIs. And the supply of empty RTIs to the supplier.

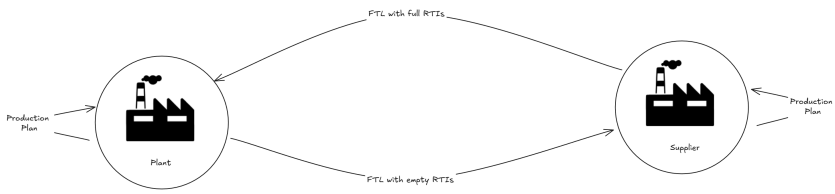

Figure 3: Enter Caption

Several constraints and assumptions are considered in this model formulation. Firstly, the physical transport constraints ensure that RTIs do not overlap and are contained in the truck. A truck's maximum weight limit must not be exceeded. Maintaining the static stability of containers during transport is crucial to prevent tipping or shifting because it could damage RM and AP. Rotations of containers about z-axes are

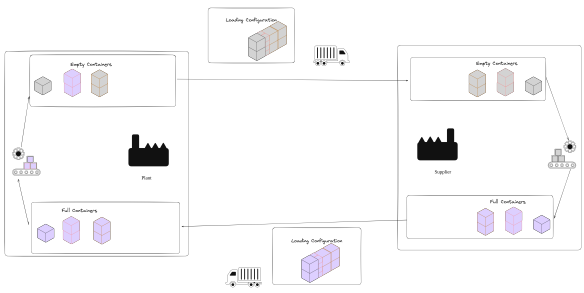

Figure 4: Enter Caption

allowed. As FTL is the mode of transport employed, trucks should be loaded to achieve a minimum utilisation percentage. Furthermore, we assume that the supplier's production plans and the plan are synchronised to guarantee the production of the manufacturing site. Minimum inventory coverage constraints are considered, subject to the product's future demand. Thus, the problem can be formulated in the following way:

Initial data:

- Product data: initial inventory, demand for each time period of the plant in terms of full RTIs, the type of reusable container in which it must travel, production demand for each time period at the supplier in terms of RTIs, and the weight of the RTI when loaded with the given product
- Reusable container data: RTI dimensions when full and folded.
- Transport data: number of available trucks, minimum utilisation percentage, dimensions and maximum weight

To determine:

- The number of trucks used daily with their corresponding loading configuration.
- The inventory level in terms of full RTIs for each product in the factory and supplier, given that everything goes according to plan.
- The inventory level of folded RTIs in the factory and supplier.

Subject to:

- Loading restrictions (i,e: containers cannot overlap, rotations about z axes are allowed, the maximum weight of a truck can not be exceeded, static stability)
- Minimum coverage stock

In order to:

- Minimise the total transportation cost
- Minimise the total inventory holding cost

4 Mathematical model

The 3D-SCPTOP mathematical programming model integrates container loading constraints and procurement transport decisions. It differs from traditional 3D container packing problems in two significant aspects. Firstly, the quantity of containers required for loading depends on product demand and the inventory levels of the manufacturing site. Therefore, the specific products to be transported are identified to minimise transport and inventory costs. As inventory levels depend on past loading decisions, a time dimension has to be taken into account. Secondly, it combines output maximisation problems and input minimisation. On the one hand, the number of trucks to be used is minimised, i.e. input minimisation. On the other hand, trucks must be fully loaded, i.e. output maximisation. It also extends traditional procurement transport planning approaches by taking into account 3D loading constraints and RTI management.

Table 4 presents the nomenclature of the 3D-SCPTOP model.

Table 4: Nomenclature of 3D-SCPTOP

Indices	
R	Set of RTI types ($r = 1, \ldots, R$)
I	Set of RTIs ($i = 1, \ldots, I$)
K	Set of trucks ($k = 1, \ldots, K$)
N	Set of products ($n = 1, \ldots, N$)
L	Set of loading configurations ($l = 1, 2, \ldots, L$)
T	Set of planning periods *(t =1, ... T)*
G	Set corresponding to the supplier and plant nodes $G = \{s, p\}$
Set of indices	
$M(r)$	Set of RM or AP that are carried in RTI $r \in R$, $n = 1, \ldots, M(r)$
Parameters	
cK	Cost of using a truck
lt	Lead transport time between the plant and the supplier and viceversa.
i_{gn}	Initial inventory level of $n \in N$ in $g \in G$ in terms of full RTIs

ie_{gr}	Initial inventory level of empty RTIs $r \in R$ in $g \in G$ RTIs
ic_{gn}	Inventory cost of $n \in N$ at $g \in G$ in terms of full RTIs
d_{gnt}	Production plan of $n \in N$ at $g \in G$ during time period $t \in T$
q_{rt}	Initial quantity of empty RTIs $r \in R$ arriving at supplier $s \in G$ in time period $t \in (1, \ldots, lt)$
q_{nt}	Initial quantity of full RTIs of $n \in R$ arriving at p in time period $t \in (1, \ldots, lt)$
lc_{lrg}	Number of containers of type c used in loading configuration l arriving at $g \in G$
ss_{gnt}	Security stock for product $n \in N$ in time period $t \in T$ in $g \in G$ in terms of full RTIs
ss_{gtr}	Security stock of empty RTIs $r \in R$ in time period $t \in T$ in $g \in G$
w_n	Weight of a container carrying product n
pK	Maximum weight capacity of a truck
pK	Maximum weight capacity of truck a truck
Γ_c	Volume of a container type c
Γ	Volume of a truck
α	Minimum volume utilisation of a truck
M	A large enough number to make the logic of the model work;
p_{gr}, q_{gr}, r_{gr}	length, width, and height of a container of type c;
pK, qK, rK	Length, width and height of a truck;
Decision Variables	
I_{gnt}	Inventory of product $n \in N$ at the end of $t \in T$ time period at $g \in G$ in terms of full RTIs
Ie_{gtr}	Inventory of empty RTIs $r \in R$ at the end of $t \in T$ time period at $g \in G$
Y_{gkt}	Binary variable, if one then truck $k \in K$ is used in time period $t \in T$ arriving at $g \in G$ and zero otherwise
Y_{gklt}	Binary variable, if one then truck $k \in K$ is used in time period $t \in T$ departing from $g \in G$ using loading configuration l, 0 otherwise
Q_{nt}	Integer variable indicating the number of RM or AP $n \in N$ in transport during time period t to the manufacturing plant p
Q_{rt}	Integer variable the number of empty RTIs $r \in R$ in transport during time period t to the supplier s
V_{gklrt}	Number of RTIs $r \in R$ in truck $k \in K$ using loading configuration $l \in L$ at time period $t \in T$ departing from $g \in G$
V_{kglnt}	Number of full RTIs with RM or AP $n \in N$ in truck $k \in K$ using loading configuration $l \in L$ at time period $t \in T$ departing from $g \in G$
I_{nt}	Inventory of product n at the end of time period t
X_{gil}	Binary variable indicating whether container i is used in loading configuration l
X_{gilr}	Binary variable indicating whether container i is going to be of type c for loading configuration l
V_{gklrt}	Number of containers of type c in truck k using loading configuration l at time period t
V_{kglnt}	Integer variable indicating the quantity of containers carrying product n supplied on truck k using loading configuration l at time period t.
PX_{gil}, PY_{gil}, PZ_{gil}	Coordinates of the lower left front corner of container i on the truck k during planning period t;
LX_{gilr}, LY_{gilr} , LZ_{gilr}	Defines whether the length of container i of type c is on the same direction as the x-, y- or z-axis in loading configuration l. For example, LX_{gilr} equals one if the length of container i of type c is is on the same direction as the x-axis, otherwise LX_{gilr} equals 0;
WX_{gilr} , WY_{gilr} , WZ_{gilr}	Defines whether the width of container i of type c is on the same direction as the x-, y- or z-axis on truck k axis during planning period t. For example, WX_{gilr} equals 1 if the width of container i of type c is is on the same direction as the x-axis, otherwise WX_{gilr} equals 0;
HX_{gilr}, HY_{gilr} , HZ_{gilr}	Defines whether the height of container i of type c is on the same direction as the x-, y- or z-axis on the truck k axis during planning period t. For example, HX_{gilr} equals 1 if the width of container i of type c is is on the same direction as the x-axis, otherwise HX_{gilr} equals 0
A_{gijl}, B_{gijl}, C_{gijl}, D_{gijl}, E_{gijl}, F_{gijl}	Binary variables indicating the relative position between two boxes. Variable A_{gijl} equals 1 if container i is to the left of container j on truck k during planning period t. Similarly, variables B_{gijl},C_{gijl}, D_{gijl} , E_{gijl} , F_{gijl} indicate whether container i is to the right, behind, in front, on top or below container j, respectively, on truck k during planning period t. These variables are only necessary when $i \neq k$.

We wish to minimise the total cost, which is given by transportation and inventory costs.

$$Min\ z = \sum_{g\in G}\sum_{k\in K}\sum_{t\in T} Y_{gkt}\cdot cK + \sum_{g\in G}\sum_{n\in N}\sum_{t\in T} I_{gnt}\cdot ic_{gn} \tag{1}$$

(60) - (62) define the inventory level of RM or AP according to the production demand and supply of RM or AP from the supplier s at the plant p

$$I_{pnt} = I_{pnt'} - d_{pnt} + Q_{nt'} \qquad \forall n\in N, t\in T : t\geq lt+1, t' := t-lt \tag{2}$$
$$I_{pnt} = I_{pnt'} - d_{pnt} + q_{nt} \qquad \forall n\in N, t\in (2,\dots,lt) :, t' := t-lt \tag{3}$$
$$I_{pnt} = i_{pn} - d_{pnt} + q_{nt} \qquad \forall n\in N : t := 1 \tag{4}$$
$$Ie_{ptr} = Ie_{pt'r} + \sum_{n\in M(r)} d_{pnt} - Q_{rt} \qquad \forall r\in R, t\in T : t\geq 2 \tag{5}$$
$$Ie_{ptr} = ie_{pr} + \sum_{n\in M(r)} d_{pnt} - Q_{rt} \qquad \forall r\in R, t := 1 \tag{6}$$

(65) - (66) the empty RTIs according to the production demand and supply of RTIs from the plant p at the supplier s

$$I_{snt} = I_{snt'} + d_{snt} - Q_{nt} \qquad \forall n\in N, t\in T, t'\in T, : t\geq 2, t' := t-lt \tag{7}$$
$$I_{snt} = i_{sn} + d_{snt} - Q_{nt} \qquad \forall r\in R : t := 1 \tag{8}$$
$$Ie_{str} = Ie_{st'r} + Q_{rt'} - \sum_{n\in M(r)} d_{snt} \qquad \forall r\in R, t\in T : t\geq lt+1, t' := t-lt \tag{9}$$
$$Ie_{str} = Ie_{st'r} + q_{rt} - \sum_{n\in M(r)} d_{snt} \qquad \forall r\in R, t\in (2,\dots,lt) :, t' := t-lt \tag{10}$$
$$Ie_{str} = ie_{pr} + q_{rt} - \sum_{n\in M(r)} d_{snt} \qquad \forall r\in R : t = 1 \tag{11}$$

Each product must satisfy a minimum security stock ss_{gnt}.

$$I_{gnt} \geq ss_{gnt} \quad \forall g\in G, n\in N, t\in T \tag{12}$$

(71) imposes that a truck k can only use one loading configuration l with direction $g\in G$ in time period t.

$$\sum_{l\in L} Y_{gklt} = Y_{gkt} \quad \forall g\in G, k\in K, t\in T \tag{13}$$

$$X_{gil} = \sum_{r\in R} X_{gilr} \quad \forall g\in G, i\in I, l\in L \tag{14}$$
$$V_{glr} = \sum_{i\in I} X_{gilr} \quad \forall g\in G, r\in R, l\in L \tag{15}$$

(16) ensures that a truck is used if it is carrying containers. Meanwhile, (17) - (18) impose that the truck k at time period t using loading configuration l uses the same loading configuration as l.

$$V_{gklrt} \leq M(1-Y_{gklt}) \qquad \forall g\in G, r\in R, k\in K, t\in T \tag{16}$$
$$V_{gklrt} + M(1-Y_{gklt}) \geq V_{glr} \qquad \forall g\in G, r\in R, k\in K, t\in T \tag{17}$$
$$V_{gklrt} \leq V_{glr} + M(1-Y_{gklt}) \qquad \forall g\in G, r\in R, k\in K, t\in T \tag{18}$$

Since a product can only be carried by one container type (74) sets that the number of containers of type c carried at truck k using loading configuration l at time period c is equal to the sum of containers carried of products n which containers of type c can carry. Moreover, (75) sets the total amount of product n being transported from s to p in time period t, and (76) sets the total amount of RTIs r being transported from p to s in time period t,

$$V_{pklrt} = \sum_{n \in M(r)} V_{pklnt} \qquad \forall k \in K, l \in L, t \in T, r \in R \tag{19}$$

$$Q_{nt} = \sum_{l \in L} \sum_{k \in K} V_{kslnt} \qquad \forall n \in N, t \in T \tag{20}$$

$$Q_{rt} = \sum_{l \in L} \sum_{k \in K} V_{pklrt} \qquad \forall r \in R, t \in T \tag{21}$$

(77) guarantees that the maximum weight allowed for truck k is not surpassed.

$$\sum_{l \in L} \sum_{n \in N} w_n V_{kglnt} \leq pK \qquad \forall k \in K, t \in T, g \in G \tag{22}$$

We ensure that two containers are not overlapped by their relative positions. (23) and (24) to identify whether container i is to the left or the right of container j.

$$PX_{gil} + \sum_{r \in R} (p_{gr} LX_{gilr} + q_{gr} WX_{gilr} + r_{gr} HX_{gilr}) \leq PX_{gjl} + (1 - A_{gijl})\, M \qquad \forall g \in G, i \in I, j \in I : i \neq j, t \in T \tag{23}$$

$$PX_{gjl} + \sum_{r \in R} (p_{gr} LX_{gjlr} + q_{gr} WX_{gjlr} + r_{gr} HX_{gjlr}) \leq PX_{gil} + (1 - B_{gijl})\, M \qquad \forall g \in G, i \in I, j \in I : i \neq j, t \in T \tag{24}$$

Similarly, (25)-(28) determine whether one container is ahead, behind, on top of or below one another.

$$PY_{gil} + \sum_{r \in R} (q_{gr} WY_{gilr} + p_{gr} LY_{gilr} + r_{gr} HY_{gilr}) \leq PY_{gjl} + (1 - C_{gijl})\, M \qquad \forall g \in G, i \in I, j \in I : i \neq j, t \in T \tag{25}$$

$$PY_{gjl} + \sum_{r \in R} (q_{gr} WY_{gjlr} + p_{gr} LY_{gjlr} + r_{gr} hy_{gjlr}) \leq PY_{gil} + (1 - D_{gijl})\, M \qquad \forall g \in G, i \in I, j \in I : i \neq j, t \in T \tag{26}$$

$$PZ_{gil} + \sum_{r \in R} (r_{gr} HZ_{gilr} + q_{gr} WZ_{gilr} + p_{gr} LZ_{gilr}) \leq PZ_{gjl} + (1 - E_{gijl})\, M \qquad \forall g \in G, i \in I, j \in I : i \neq j, t \in T \tag{27}$$

$$PZ_{gjl} + \sum_{r \in R} (r_{gr} HZ_{gjlr} + q_{gr} WZ_{gjlr} + p_{gr} LZ_{gjlr}) \leq PZ_{gil} + (1 - F_{gijl})\, M \qquad \forall g \in G, i \in I, j \in I : i \neq j, t \in T \tag{28}$$

(29) ensures that if containers i and j are being used, they must be to the left, right, in front, behind, on top of or below one another.

$$A_{gijl} + B_{gijl} + C_{gijl} + D_{gijl} + E_{gijl} + F_{gijl} + (1 - X_{gil}) + (1 - X_{gjl}) \geq 1 \qquad \forall g \in G, i \in I, j \in I : i \neq j, t \in T \tag{29}$$

(30) links the container type chosen with orientation.

$$LX_{gilr} + LY_{gilr} + LZ_{gilr} + WX_{gilr} + WY_{gilr} + WZ_{gilr} + HX_{gilr} + HY_{gilr} + HZ_{gilr} \leq 3 \cdot X_{gilr} \qquad \forall g \in G, r \in R, i \in I, k \in K, \tag{30}$$

(31) - (33) restrict the solution so that containers are in the truck.

$$PX_{gil} + \sum_{r \in R} (p_{gr} LX_{gilr} + q_{gr} WX_{gilr} + r_{gr} HX_{gilr}) \leq p_k + (1 - X_{gil})\, M \qquad \forall g \in G, i \in I, k \in K, t \in T \tag{31}$$

$$PY_{gil} + \sum_{r \in R} (q_{gr} WY_{gilr} + p_{gr} LY_{gilr} + r_{gr} ZY_{gilr}) \leq q_k + (1 - X_{gil})\, M \qquad \forall g \in G, i \in I, k \in K, t \in T \tag{32}$$

$$PZ_{gil} + \sum_{r \in R} (r_{gr} HZ_{gilr} + p_{gr} LZ_{gilr} + q_{gr} WZ_{gilr}) \leq r_k + (1 - X_{gil})\, M \qquad \forall g \in G, i \in I, k \in K, t \in T \tag{33}$$

A possible orientation of a container must satisfy that the length, width and height of container i are x-, y- or z-axis a single axis. Moreover, these have to be different from one another. Therefore, the following constraints must hold.

$$LX_{gilr} + LY_{gilr} + LZ_{gilr} = X_{gilr} \qquad \forall g \in G, r \in R, i \in I, t \in T \tag{34}$$
$$WX_{gilr} + WY_{gilr} + WZ_{gilr} = X_{gilr} \qquad \forall g \in G, r \in R, i \in I, t \in T \tag{35}$$
$$HX_{gilr} + HY_{gilr} + HZ_{gilr} = X_{gilr} \qquad \forall g \in G, r \in R, i \in I, t \in T \tag{36}$$
$$LX_{gilr} + WX_{gilr} + HX_{gilr} = X_{gilr} \qquad \forall g \in G, r \in R, i \in I, t \in T \tag{37}$$
$$LY_{gilr} + WY_{gilr} + HY_{gilr} = X_{gilr} \qquad \forall g \in G, r \in R, i \in I, t \in T \tag{38}$$
$$LZ_{gilr} + WZ_{gilr} + HZ_{gilr} = X_{gilr} \qquad \forall g \in G, r \in R, i \in I, t \in T \tag{39}$$

To ensure trucks are loaded to minimum utilisation, the equation constrains the solutions so the truck must at least be loaded to α_k of its capacity.

$$\alpha_k \leq \frac{\sum_{c,l} V_{gklrt}\Gamma_c}{\Gamma_k} \qquad \forall g \in G, k \in K, t \in T \tag{40}$$

Finally, we define the domain of the variables.

$$I_{nt} \geq 0 \qquad \forall n \in N, t \in T \tag{41}$$
$$Y_{kt} \in \{0,1\} \qquad \forall k \in K, t \in T \tag{42}$$
$$X_{gil}, X_{gilr}, X^n_{gilr} \in \{0,1\} \qquad \forall r \in R, i \in I, k \in K, n \in N, t \in T \tag{43}$$
$$V^n_t, V^k_{int} \in \mathbb{N} \cup \{0\} \qquad \forall i \in I, k \in K, n \in N, t \in T \tag{44}$$
$$PX_{gil}, PY_{gil}, PY_{gil} \geq 0 \qquad \forall i \in I, t \in T, k \in K \tag{45}$$
$$LX_{gilr}, LY_{gilr}, LZ_{gilr}, WX_{gilr}, WY_{gilr}, WZ_{gilr}, HX_{gilr}, HY_{gilr}, HZ_{gilr} \in \{0,1\} \qquad \forall r \in R, i \in I, k \in K, t \in T \tag{46}$$
$$A_{gijl}, B_{gijl}, C_{gijl}, D_{gijl}, E_{gijl}, F_{gijl} \in \{0,1\} \qquad \forall i \in I, j \in J, k \in K, t \in T \tag{47}$$

Regarding vertical stability, the 3D-SCPTOP model is extended to ensure that loaded boxes resist the force of gravity. Similar to (Paquay, Schyns, and Limbourg 2016), vertical stability is ensured by determining if the vertices of containers are supported by one another when they do not directly contact the ground. Furthermore, we impose that for an RTI to be in top of another, it has to have all four corners in top of another RTI, unless it's at the ground level. The four bottom corners are denoted by a tuple (u, u') where $u, u' \in U = \{0,1\}$. Parameter u refers to the position on the x-axis (with $u = 0$ indicating a minimum x value and $u = 1$ a maximum x value). Parameter u' is defined analogously for the y-axis (see Figure 5).

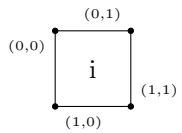

Figure 5: Description of the bottom corners position

The following additional variables are defined:

Variables	
T_{gijl}	Binary variable equal to 1 if RTI $i \in I$ is directly on top of $j \in I$ in loading configuration l.
GL_{gil}	Binary variable indicating if container i is on the ground level on truck k during time period t.
$O_{gijuu'l}$	Binary variable equal to 1 if the bottom corner (u, u') of container i is immediately supported by container j on truck k during time period t.

Constraints (48) and (49) link the z-coordinate of container i with the ground–level variable GL_{gil}:

$$M\Big(1 - GL_{gil}\Big) \geq PZ_{gil} \quad \forall i \in I,\ t \in T \tag{48}$$

$$1 - GL_{gil} \leq M\, PZ_{gil} \quad \forall i \in I,\ t \in T \tag{49}$$

Constraints (50) and (51) imply that for $O_{gijuu'l}$ to be active, the heights of containers i and j must be compatible:

$$\begin{aligned} PZ_{gil} \leq PZ_{gjl} + \sum_{r \in R}\Big(r_{gr}\, HZ_{gjlr} + q_{gr}\, WZ_{gjlr} + p_{gr}\, LZ_{gjlr}\Big) + (1 - O_{gijuu'l})M \\ \forall i, j \in I,\ i \neq j,\ k \in K,\ (u, u') \in U \times U,\ t \in T \end{aligned} \tag{50}$$

$$\begin{aligned} PZ_{gil} + (1 - O_{gijuu'l})M \geq PZ_{gjl} + \sum_{r \in R}\Big(r_{gr}\, HZ_{gjlr} + q_{gr}\, WZ_{gjlr} + p_{gr}\, LZ_{gjlr}\Big) \\ \forall i, j \in I,\ i \neq j,\ k \in K,\ (u, u') \in U \times U,\ t \in T \end{aligned} \tag{51}$$

Furthermore, the coordinates of the corner (u, u') of container i must lie within the XY projection of container j. Constraints (52) and (53) link the x-dimensions, and constraints (54) and (55) link the y-dimensions. Parameter ϵ assures that the corner (u, u') has at least ϵ support.

$$\begin{aligned} PX_{gil} + u\left(\sum_{r \in R}(p_{gr}\, LX_{gilr} + q_{gr}\, WX_{gilr} + r_{gr}\, HX_{gilr})\right) + M(1 - O_{gijuu'l}) \\ \geq PX_{gjl} + \epsilon\, u \quad \forall i, j \in I,\ i \neq j,\ k \in K,\ (u, u') \in U \times U,\ t \in T \end{aligned} \tag{52}$$

$$\begin{aligned} PX_{gil} + u\left(\sum_{r \in R}(p_{gr}\, LX_{gilr} + q_{gr}\, WX_{gilr} + r_{gr}\, HX_{gilr})\right) \leq PX_{gjl} + \sum_{r \in R}(p_{gr}\, LX_{gjlr} + q_{gr}\, WX_{gjlr} + r_{gr}\, HX_{gjlr}) \\ + M(1 - O_{gijuu'l}) - (1 - u)\epsilon \quad \forall i, j \in I,\ i \neq j,\ k \in K,\ (u, u') \in U \times U,\ t \in T \end{aligned} \tag{53}$$

$$\begin{aligned} PY_{gil} + u'\left(\sum_{r \in R}(q_{gr}\, WY_{gilr} + p_{gr}\, LY_{gilr} + r_{gr}\, HY_{gilr})\right) + M(1 - O_{gijuu'l}) \\ \geq PY_{gjl} + \epsilon\, u' \quad \forall i, j \in I,\ i \neq j,\ k \in K,\ (u, u') \in U \times U,\ t \in T \end{aligned} \tag{54}$$

$$\begin{aligned} PY_{gil} + u'\left(\sum_{r \in R}(q_{gr}\, WY_{gilr} + p_{gr}\, LY_{gilr} + r_{gr}\, HY_{gilr})\right) \leq PY_{gjl} + \sum_{r \in R}(q_{gr}\, WY_{gjlr} + p_{gr}\, LY_{gjlr} + r_{gr}\, HY_{gjlr}) \\ + M(1 - O_{gijuu'l}) - (1 - u')\epsilon \quad \forall i, j \in I,\ i \neq j,\ k \in K,\ (u, u') \in U \times U,\ t \in T \end{aligned} \tag{55}$$

Constraint (56) ensures that either a used container is at the bottom of the truck or all four bottom corners are supported by other boxes:

$$\sum_{j \in I,\ (u,u') \in U \times U} O_{gijuu'l} + M\Big(GL_{gil} + 1 - X_{gil}\Big) \geq 4 \quad \forall i \in I,\ k \in K,\ t \in T \tag{56}$$

Constraint (57) limits $O_{gijuu'l}$ to be active only if container j is used during planning period t:

$$O_{gijuu'l} \geq X_{gjl} \quad \forall g \in G,\ i, j \in I,\ (u, u') \in U \times U,\ k \in K,\ t \in T \tag{57}$$

Additionally, to allow only 90 degree rotations along the z-axis the following constraint is added:

$$HZ_{gilr} \leq X_{gilr} \quad \forall g \in G,\ r \in R,\ i \in I,\ k \in K,\ t \in T \tag{58}$$

Finally, the following equations link the RTI stacking variables:

$$4\,T_{gijl} = \sum_{(u,u')\in U\times U} O_{gijuu'l} \quad \forall g \in G,\ i,j \in I,\ l \in L,\ i \neq j$$

$$\sum_{j\in I} T_{gijl} \leq 1 \quad \forall g \in G,\ i \in I,\ l \in L$$

5 Matheuristic Procedure

As previously mentioned, exact methods provided by MILP solvers fall short for tackling real world instances with the current computation technology. Therefore, a matheuristic approach is proposed, Math-3D-SCPTOP. It is based on decoupling the two sub-processes involved in the problem: finding 3D loading configurations of RTIs inside the trucks and determining the number of trucks and what to carry in each time period in order to minimize inventory and transport costs.

This matheuristic is based on two main components. First a MILP model is defined to determine which loading configurations from a given set should be used in order to minimise the transport and inventory costs. Second a metaheuristic approach is used to identify these loading configurations.

5.1 PLC-SCPTOP

The following MILP model, dubbed as PLC-SCPTOP, uses predefined loading configurations of container types to determine which loading configurations to use, the products to carry and the number of trucks in order to minimise inventory and transport costs. The predefined loading configurations must already obey the spatial constraints defined in 3D-SCPTOP. Theoretically, if every conceivable loading configuration were incorporated into the model, the optimal solution of PLC-SCPTOP would align with that of 3D-SCPTOP. Enumerating all of the possible loading configurations of a 3D Bin Packing Problems would take an exponential number of memory space and cpu time with respect the number of container types. Moreover, solving the PLC-SCPTOP would become even more time-consuming, assuming the MILP program could be fully allocated in memory.

Table 5

Table 5: Nomenclature of Math-3D-SCTOP

Indices	
R	Set of RTI types ($r = 1, \ldots, R$)
K	Set of trucks ($k = 1, 2, \ldots, K$)
N	Set of products *(n = 1,...,N)*
L	Set of loading configurations ($l = 1, 2, \ldots, L$)
T	Set of planning periods *(t =1, 2... T)*
G	Set corresponding to the supplier and plant nodes $G = \{s, p\}$
Set of indices	
$M(r)$	Set of RM or AP that are carried in RTI $r \in R$, $n = 1, \ldots, M(r)$
Parameters	
cK	Cost of using a truck
lt	Lead transport time between the plant and the supplier and viceversa.
i_{gn}	Initial inventory level of $n \in N$ in $g \in G$ in terms of full RTIs
ie_{gr}	Initial inventory level of empty RTIs $r \in R$ in $g \in G$ RTIs
ic_{gn}	Inventory cost of $n \in N$ at $g \in G$ in terms of full RTIs
d_{gnt}	Production plan of $n \in N$ at $g \in G$ during time period $t \in T$
q_{rt}	Initial quantity of empty RTIs $r \in R$ arriving at supplier $s \in G$ in time period $t \in (1, \ldots, lt)$
q_{nt}	Initial quantity of full RTIs of $n \in R$ arriving at p in time period $t \in (1, \ldots, lt)$
lc_{lrg}	Number of containers of type c used in loading configuration l arriving at $g \in G$
ss_{gnt}	Security stock for product $n \in N$ in time period $t \in T$ in $g \in G$ in terms of full RTIs
ss_{gtr}	Security stock of empty RTIs $r \in R$ in time period $t \in T$ in $g \in G$
w_n	Weight of a container carrying product n
k_t	Numbers of trucks available at time period t

pK	Maximum weight capacity of a truck
Decision Variables	
I_{gnt}	Inventory of product $n \in N$ at the end of $t \in T$ time period at $g \in G$ in terms of full RTIs
Ie_{gtr}	Inventory of empty RTIs $r \in R$ at the end of $t \in T$ time period at $g \in G$
Y_{gkt}	Binary variable, if one then truck $k \in K$ is used in time period $t \in T$ arriving at $g \in G$ and zero otherwise
Y_{gklt}	Binary variable, if one then truck $k \in K$ is used in time period $t \in T$ departing from $g \in G$ using loading configuration l, 0 otherwise
Q_{nt}	Integer variable indicating the number of RM or AP $n \in N$ in transport during time period t to the manufacturing plant p
Q_{rt}	Integer variable the number of empty RTIs $r \in R$ in transport during time period t to the supplier s
V_{gklrt}	Number of RTIs $r \in R$ in truck $k \in K$ using loading configuration $l \in L$ at time period $t \in T$ departing from $g \in G$
V_{kglnt}	Number of full RTIs with RM or AP $n \in N$ in truck $k \in K$ using loading configuration $l \in L$ at time period $t \in T$ departing from $g \in G$

We wish to minimise the total cost, which is given by transportation and inventory costs.

$$Min\ z = \sum_{g \in G} \sum_{k \in K} \sum_{t \in T} Y_{gkt} \cdot cK + \sum_{g \in G} \sum_{n \in N} \sum_{t \in T} I_{gnt} \cdot ic_{gn} \tag{59}$$

(60) - (62) define the inventory level of RM or AP according to the production demand and supply of RM or AP from the supplier s at the plant p

$$I_{pnt} = I_{pnt'} - d_{pnt} + Q_{nt'} \qquad \forall n \in N, t \in T : t \geq lt + 1, t' := t - lt \tag{60}$$

$$I_{pnt} = I_{pnt'} - d_{pnt} + q_{nt} \qquad \forall n \in N, t \in (2, \ldots, lt) :, t' := t - lt \tag{61}$$

$$I_{pnt} = i_{pn} - d_{pnt} + q_{nt} \qquad \forall n \in N : t := 1 \tag{62}$$

$$Ie_{ptr} = Ie_{pt'r} + \sum_{n \in M(r)} d_{pnt} - Q_{rt} \qquad \forall r \in R, t \in T : t \geq 2 \tag{63}$$

$$Ie_{ptr} = ie_{pr} + \sum_{n \in M(r)} d_{pnt} - Q_{rt} \qquad \forall r \in R, t := 1 \tag{64}$$

(65) - (66) the empty RTIs according to the production demand and supply of RTIs from the plant p at the supplier s

$$I_{snt} = I_{snt'} + d_{snt} - Q_{nt} \qquad \forall n \in N, t \in T, t' \in T, : t \geq 2, t' := t - lt \tag{65}$$

$$I_{snt} = i_{sn} + d_{snt} - Q_{nt} \qquad \forall r \in R : t := 1 \tag{66}$$

$$Ie_{str} = Ie_{st'r} + Q_{rt'} - \sum_{n \in M(r)} d_{snt} \qquad \forall r \in R, t \in T : t \geq lt + 1, t' := t - lt \tag{67}$$

$$Ie_{str} = Ie_{st'r} + q_{rt} - \sum_{n \in M(r)} d_{snt} \qquad \forall r \in R, t \in (2, \ldots, lt) :, t' := t - lt \tag{68}$$

$$Ie_{str} = ie_{pr} + q_{rt} - \sum_{n \in M(r)} d_{snt} \qquad \forall r \in R : t = 1 \tag{69}$$

Each product must satisfy a minimum security stock ss_{gnt}.

$$I_{gnt} \geq ss_{gnt} \quad \forall g \in G, n \in N, t \in T \tag{70}$$

(71) imposes that a truck k can only use one loading configuration l with direction $g \in G$ in time period t.

$$\sum_{l \in L} Y_{gklt} = Y_{gkt} \quad \forall k \in K, g \in G, t \in T \tag{71}$$

(72) - (73) impose that the truck k at time period t using loading configuration l uses the same loading configuration as l.

$$V_{gklrt} + M \cdot (1 - Y_{gklt}) \geq lc_{lrg} \qquad \forall k \in K, g \in G, l \in L, t \in T \tag{72}$$

$$V_{gklrt} \leq Y_{gklt} \cdot lc_{lrg} + M \cdot (1 - Y_{gklt}) \qquad \forall k \in K, l \in L, g \in G, t \in T \tag{73}$$

Since a product can only be carried by one container type (74) sets that the number of containers of type c carried at truck k using loading configuration l at time period c is equal to the sum of containers carried of products n which containers of type c can carry. Moreover, (75) sets the total amount of product n being transported from s to p in time period t, and (76) sets the total amount of RTIs r being transported from p to s in time period t,

$$V_{pklrt} = \sum_{n \in M(r)} V_{pklnt} \qquad \forall k \in K, l \in L, t \in T, r \in R \tag{74}$$

$$Q_{nt} = \sum_{l \in L} \sum_{k \in K} V_{kslnt} \qquad \forall n \in N, t \in T \tag{75}$$

$$Q_{rt} = \sum_{l \in L} \sum_{k \in K} V_{pklrt} \qquad \forall r \in R, t \in T \tag{76}$$

(77) guarantees that the maximum weight allowed for truck k is not surpassed.

$$\sum_{l,n} w_n V_{kglnt} \leq pK \qquad \forall k \in K, t \in T, g \in G \tag{77}$$

$$\begin{aligned}
I_{gnt} &\in \mathbb{Z}_{\geq 0} && \forall g \in G,\ n \in N,\ t \in T, \\
Ie_{gtr} &\in \mathbb{Z}_{\geq 0} && \forall g \in G,\ t \in T,\ r \in R, \\
Y_{gkt} &\in \{0,1\} && \forall k \in K,\ g \in G,\ t \in T, \\
Y_{gklt} &\in \{0,1\} && \forall k \in K,\ g \in G,\ l \in L,\ t \in T, \\
Q_{nt} &\in \mathbb{Z}_{\geq 0} && \forall n \in N,\ t \in T, \\
Q_{rt} &\in \mathbb{Z}_{\geq 0} && \forall r \in R,\ t \in T, \\
V_{gklrt} &\in \mathbb{Z}_{\geq 0} && \forall g \in G,\ k \in K,\ l \in L,\ r \in R,\ t \in T, \\
V_{kglnt} &\in \mathbb{Z}_{\geq 0} && \forall k \in K,\ g \in G,\ l \in L,\ n \in N,\ t \in T.
\end{aligned}$$

5.2 Meta-Heuristic Procedure

The objective of the metaheuristic is to obtain good loading configurations so the PLC-SCPTOP model can optimise transport and inventory costs while managing RTI flow. Therefore, the metaheuristic should consider the temporal nature of the problem. That is, the loading problem must consider the future demand of products and the current state of inventories.

To simulate the production and transportation, we define two separate processes. On the one hand, we have the plant processes and on the other we have the supplier processes. In each node, we first receive the RTIs, then we produce, and after that we make the transport decisions. 6 illustrates the both processes and the connections between them.

In both cases, we need to determine transport decisions. That is, the loading configurations and what is going to be transported. We can only transport what we already have in stock. Furhtermore, RTIs are loaded into the truck as stacks. Each RTI has a set of compatible RTIs which can be stacked with. We use a column generation technique to find the RTIs stacks that can be loaded. Then, we find a loading configuration through a 2D-SLOPP formulation, where the stacks that contain RTIs needed in the other supply chain node for the next products are prioritized through the objective function. Once the RTI loading configuration is determined, we decide RM or AP procurement for the manufacturing site, prioritizing RMs or APs which have less stock at the manufacturing site.

We will use the previously found loading configurations to consider the time dependency of the loading problem at hand. For each period $t \in T$, we will solve the PLC-SCPTOP problem from day 1 to t with the current loading configurations obtained to find the inventory levels of the products at day t. Then, we find the necessary containers for the following $\delta \in \Delta$ days, where Δ is a user-defined list of parameters.

Finally, we feed the loading configurations found by Algorithms 1 and 2 to the PLC-SCPTOP mathematical modelling as parameters to find reasonable quality solutions to 3D-SCPTOP problem.

5.2.1 Loading Procedure

To address the loading problem, will divide the problem in two parts. First, we will find through a column generation technique for the cutting stock problem to find different stacks that will be loaded. Once these stacks are found, we will

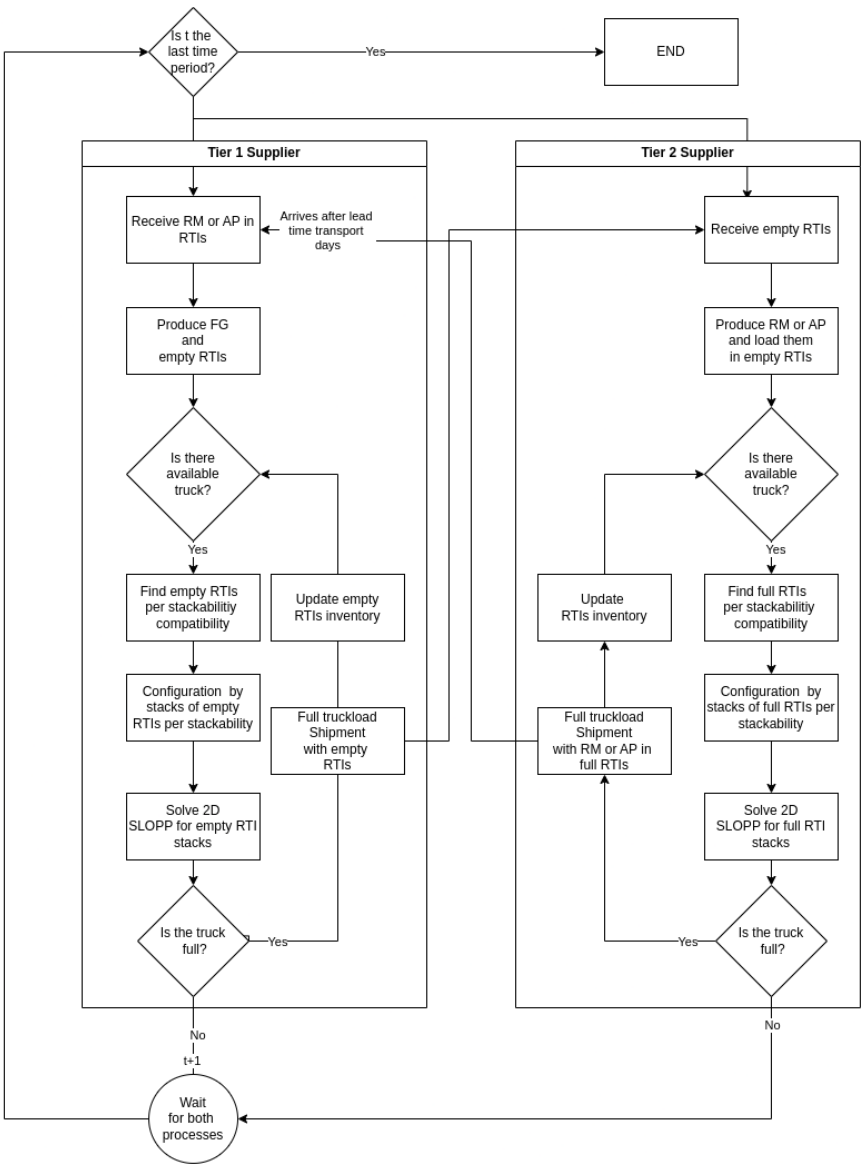

Figure 6: Procceses of plant and supplier

6 Computational and comparative analysis

Here the 3D-SCPTOP model is validated and compared to the work by (Díaz-Madroñero, Mula, and Peidro 2014). This fuzzy optimisation model integrates procurement transport and inventory holding decisions by contemplating transport capacity restrictions by a maximum number of containers per truck, which we refer to as SCPTOP from this point onwards. To compare the SCPTOP model, we make three key modifications: fuzzy parameters are not considered; transport capacity restriction takes into account the volume of individual containers and the truck's capacity; products can be loaded in more than one container type. The SCPTOP model is extended and defined in Appendix A. We evaluate and compare both the 3D-SCPTOP and SCPTOP models, in terms of solution quality, transport costs, inventory costs and computational times. The 3D-SCPTOP and SCPTOP mathematical formulations are solved for all the instance sets with CP-SAT from OR-Tools and Gurobi using their default settings. Additionally, as ($C\&P$) problems are NP-hard, the Meta-3D-SCPTOP algorithm has been developed to find igh-quality solutions for large real-world instances, based on a case study. So the performance of the 3D-SCPTOP, the Meta-3D-SCPTOP and the SCPTOP models is compared and evaluated as follows.

Twenty-four instances are artificially generated by a stochastic process, whose key characteristics are

Algorithm 1 Loading Configurations

```
procedure LoadingConfigurations
    T # List of time periods
    LC=[] # List of loading configurations
    for t ∈ T do
        for δ ∈ Δ do
            IncomingTransport(t)
            Produce(t)
            while TransportResourceAvailable do
                C = ContainersToLoad(t, δ, LC)


                LC.append(PackContainers(C,t))
            end while
        end for
    end for
    LC=EliminateDuplicateOrDominatedLoadingConfigurations(LC)
    return LC
end procedure
```

Algorithm 2 Final Loading Configurations

```
procedure Final Loading Configurations(LC)
    TimePeriods # List of time spans to calculate the number of needed products
    TimeSpan # List of time spans to calculate the number of needed products
    for t in TimePeriods do
        for δ in TimeSpan do
            I=SolvePLC-SCPTOP(LC,t)
            C= ContainersToLoad(I,t, δ, LC)
            LC.append(PackContainers(C,t))
        end for
    end for
    LC=EliminateDuplicateOrDominatedLoadingConfigurations(LC)
    return LC
end procedure
```

given as follows:

- **Demand Generation**: the demand for each product is randomly generated by deviating from a given mean by plus or minus ten percent. This introduces variability into the demand values for different products
- **Time Periods**: Half of the instances have a total of five time periods, while the other half have a total of ten time periods. This allows evaluating the model's performance over different time horizons.
- **Container Types**: Each instance includes a varying number container types, specifically two, three or four. The distribution of container types is the same among instances, which implies that an equal number of instances has the same number of containers
- **Container Dimensions**: The dimensions of each container type are randomly generated. The width, length and height of boxes are fractions of the width, length, or height of trucks. This randomness ensures diversity in the sizes of containers across the generated instances. An additional constraint is applied to the generation of containers. The volume of each container must be at least 1/n of the truck's volume, where n can take the values of four, six or eight. This ensures that containers are appropriately sized in relation to trucks

By incorporating these stochastic elements into the generation process, the 24 instances provide a diverse set of scenarios for evaluating the model's performance. Variability in demand, time periods, box types and box

Algorithm 3 MathH-3D-SCPTOP

1: Δ_1, Δ_2 # List of time spans to calculate the number of needed products
2: LC = InitialLoadingConfiguration(Δ_1)
3: LC = FinalLoadingConfiguration(LC, Δ_2)
4: SolvePLCSCPTOP(LC,|T|))

dimensions introduces realistic and challenging conditions that the model needs to address. Furthermore, we use the number of time periods, the number of box types, the number of products and the maximum amount of containers needed to load a truck (in volume terms) as explanatory variables of various metrics from the models, such as total cost, transport cost, inventory cost, solution gap and solution time. The instance name is in the form of *I_n_t_c_v*, where n is product type, t is the number of time periods, c is the number of container types and v is the minimum volume of containers.

Each test is limited to 4 hours (14,400 seconds) of run-time per instance. Tests are performed on a Microsoft Windows Server 2022 Standard n with an AMD EPYC 7402 24-Core Processor running at 2,800 MHz, with 256 GB of RAM using Python as the programming language.

7 Practical application

This section presents a practical procurement transport application. The proposed resolution framework was evaluated using real data from an automotive industry supply chain. We validate and compare the 3D-SCPTOP solution procedures to the company's procedure, which employs predefined loading configurations that indicate the number of each container type to be carried. Finding these loading configurations is a very tedious and time-consuming manual task that is based on a spreadsheet procedure. A mathematical programming model, dubbed as PLC-SCPTOP, which replicates the current's company procedure, is then utilised to minimise the total cost, with a summation of procurement transport and inventory holding costs, and one based on these predetermined configurations.

The real-world data derived from the company's operations act as the empirical foundation for examining both the PLC-SCPTOP and the Meta-3D-SCPTOP. To broaden the scope of this analysis, we scale and manipulate these data, guided by a stochastic process, to simulate several potential operational scenarios. Setting our analysis to mirror the dynamic and unpredictable realities of supply chain operations thus enhances the validity of our evaluation and the practical relevance of the suggested metaheuristic. For this purpose, we propose three different scenarios for the created instances: normal demand, low variability demand, high variability demand. Table **??**, found in the Appendix Aoutlines the models' performance across these instances. Table 6 summarises models' performance and resolution times.

Table 6: Summary of performance for the practical application

Model	Objective Value	Best Bound	Duration (seconds)
MathH-3D-SCTOP	252235.198934	247307.820849	740.000000
Meta-3D-SCTOP	256715.145777	NaN	677.555556
PLC-SCTOP	275226.680415	271798.477640	44.670370

Figures **??** - **??** describe the performance of both the models and solution procedures in the different scenarios. The x-axis shows the scenario, while the y-axis depicts the objective value, inventory costs, or transport costs. Each colour represents a different model applied to obtain the solution.

The results reveal that an effective systematic method is proposed for solving procurement transport operational planning with 3D full-truck loading constraints. This solution is both automated and executed within a reasonable computational timeframe. Our methodology proves particularly beneficial when there is significant discrepancy between the company's proposed loading configurations and the actual demand concerning container types. In such instances, the company is usually left with two choices: either use the fixed loading configurations and, thus, incur higher inventory and transport costs, or manually resolve the loading configuration via a spreadsheet procedure, which might lead to errors. However, one potential disadvantage of the proposed Meta-3D-SCPTOP is its performance under normal demand conditions because the demand for different container types is consistent with the loading configurations, but the metaheuristic may result in fewer optimal inventory holding costs compared to the company's current procedure. This is

because the Meta-3D-SCPTOP obtains decisions locally, while exact methods are guaranteed, given enough time, to find the optimal solution.

This issue is, however, solved when utilising MathH-3D-SCPTOP because it effectively combines both heuristic and exact methods. While the heuristic provides a fast and reasonably good solution for the initial loading configurations, the exact method improves it by further lowering inventory and transport costs.

Therefore, this method shows promising results for reducing inventory and transport costs, particularly under variable demand and misalignment between loading configurations and container types.

8 Conclusions

We herein propose a MILP model, 3D-SCPTOP, to tackle procurement transportation planning at an operational level by incorporating 3D loading constraints into its considerations. Given the NP-hard nature of 3D bin packing, we have also developed a metaheuristic approach, Meta-3D-SCPTOP, which is later refined and enhanced by employing a mathheuristic technique, MatH-3D-SCPTOP.

A case study has also been conducted within an automotive SC that comprises a car assembler, a first-tier supplier and a second-tier supplier. The objective of the 3D-SCPTOP model is twofold: (i) to minimise the total number of trucks used; (ii) to minimise inventory holding costs. This approach takes into account the complexities of supply chain logistics in the automotive industry by demonstrating a successful integration of procurement transport planning and 3D loading constraints.

Managerial implications in a SC context are oriented to the proposed solution methodology, improving the solutions found by the company's procedure. It is also able to adapt to demand changes while finding high-quality solutions in reasonable computational times.

Nevertheless, several challenges remain for further research lines to deal with; for instance, the inclusion of multiple suppliers to better represent complex supply chains. A more comprehensive transport operation model could be achieved by incorporating routing aspects, such as vehicle routing with 3D loading constraints. Furthermore, the introduction of dynamic stability into loading constraints may also yield more practical, robust solutions. Integrating sourcing and delivery transport decisions could improve supply chain efficiency. Finally, the incorporation of production scheduling into the model has the potential of offering a cohesive approach to supply chain planning optimisation by aligning production timelines with transportation and inventory strategies.

A Mathematical Model

Table 7: Nomenclature of Supply Chain Operation Transport Planning

Sets of indices	
I:	Set of products ($i = 1, 2, \ldots, I$)
J :	Set of groups composed of products that must be ordered together ($j = 1, 2, \ldots, J$)
K :	Set of trucks ($k = 1, 2, \ldots, K$)
T :	Set of planning periods (days) ($t = 1, 2, \ldots, T$)
Decision variables	
$Q_{ikt:}$	Units transported of i by k in period t (units)
G_{ijkt} :	Units transported of i corresponding to group j by k in period t (units)
C_{kt} :	Volume of containers transported by k in period t (units)
I_{it} :	Inventory amount of i at the end of period t (units)
$K_{jkt:}$	Number of lots to order of products of group j by k in period t
Y_{kt}	Binary variable indicating whether a truck k has been used in period t
Objective functions	
z_1 :	Total number of trucks utilized
z_2	Total inventory amount generated
Parameters	
u_i :	Amount of product i that fits in a container (units)
l_j :	Number of units of each group lot j (units)
b_{ij}	1 if product i belongs to group j, and 0 otherwise
D_{it} :	Demand of product i in t (units) (considered firm)
Γ_k :	Volume of truck k
Γ_i :	Volume of container carrying product i
m :	Minimum truck occupation (in containers)
$I0_i$	Inventory amount of i in period 0
IC_i	Inventory cost of i
C_k	Cost of using truck k
SC_i	Number of days of stock coverage for product i

Minimize the total cost transport and inventory

$$\text{Min } z \cong \sum_{k=1}^{K}\sum_{t=1}^{T} Y_{kt} + \sum_{i=1}^{I}\sum_{t=1}^{T} I_{it} \cdot IC_i$$

subject to

$$\begin{aligned}
&I_{it} = I_{i(t-1)} - D_{it} + \sum_{k=1}^{K} Q_{ikt} \quad \forall i \in I, t \in T,\\
&Q_{ikt} = \sum_{j=1}^{J} G_{ijkt} \quad \forall i \in I, k \in K, t \in T,\\
&G_{ijkt} = K_{jkt} \cdot l_j \cdot b_{ij} \quad \forall i \in I, j \in I, k \in K, t \in T,\\
&C_{kt} = \sum_{i=1}^{l} Q_{ikt}/u_i \cdot \Gamma_i \quad \forall k \in K, t \in T,\\
&C_{kt} \leqslant \Gamma_k \cdot Y_{kt} \quad \forall k \in K, t \in T,\\
&C_{kt} \geqslant m \cdot \Gamma_k Y_{kt} \quad \forall k \in K, \in T\\
&I_{nt} \geq \begin{cases} \sum_{s\in\{1,\ldots,SC_i\}} D_{i,t+s} & \text{if } i \in I, t \in \{1,\ldots,|T|-SC_i\}\\ \sum_{s\in\{1,\ldots,SC_i\}} D_{i,|T|-SC_i+s} & \text{other wise}\end{cases}\\
&Y_{kt} \leqslant 1 \quad \forall k, t,\\
&I_{it}, Q_{ikt}, G_{ijkt}, C_{kt}, K_{jkt}, Y_{kt} \geqslant 0 \text{ integer} \quad \forall i \in I, j \in I, k \in K, t \in T.
\end{aligned}$$

In our case $|J| = |I|$, one group for each product.

References

Ali, Sara et al. (June 2022). "On-line three-dimensional packing problems: A review of off-line and on-line solution approaches". In: *Computers and Industrial Engineering* 168. ISSN: 03608352. DOI: 10.1016/j.cie.2022.108122.

Alonso, M. T., R. Alvarez-Valdes, and F. Parreño (Mar. 2020). "A GRASP algorithm for multi container loading problems with practical constraints". In: *4OR* 18.1, pp. 49–72. ISSN: 16142411. DOI: 10.1007/s10288-018-0397-z.

Alonso, M. T., A. Martinez-Sykora, et al. (Nov. 2022). "The pallet-loading vehicle routing problem with stability constraints: The pallet-loading vehicle routing problem with stability constraints. Second revision". In: *European Journal of Operational Research* 302.3, pp. 860–873. ISSN: 03772217. DOI: 10.1016/j.ejor.2022.01.035.

Baller, Reinhard et al. (July 2022). "Optimizing automotive inbound logistics: A mixed-integer linear programming approach". In: *Transportation Research Part E: Logistics and Transportation Review* 163. ISSN: 13665545. DOI: 10.1016/j.tre.2022.102734.

Berman, Oded and Qian Wang (2006). "Inbound logistic planning: Minimizing transportation and inventory cost". In: *Transportation Science* 40.3, pp. 287–299. ISSN: 15265447. DOI: 10.1287/trsc.1050.0130.

Bortfeldt, Andreas and Gerhard Wäscher (Aug. 2013). "Constraints in container loading-A state-of-the-art review". In: *European Journal of Operational Research* 229.1, pp. 1–20. ISSN: 03772217. DOI: 10.1016/j.ejor.2012.12.006.

Chen, C S, S M Lee, and Q S Shen (1995). *EUROPEAN JOURNAL OF OPERATIONAL RESEARCH An analytical model for the container loading problem.* Tech. rep., pp. 68–76.

Chen, Mingzhou, Jiazhen Huo, and Yongrui Duan (June 2023). "A hybrid biogeography-based optimization algorithm for three-dimensional bin size designing and packing problem". In: *Computers and Industrial Engineering* 180. ISSN: 03608352. DOI: 10.1016/j.cie.2023.109239.

Chitsaz, Masoud, Jean François Cordeau, and Raf Jans (Dec. 2019). "A unified decomposition matheuristic for assembly, production, and inventory routing". In: *INFORMS Journal on Computing* 31.1, pp. 134–152. ISSN: 15265528. DOI: 10.1287/ijoc.2018.0817.

Chopra, Sunil and Peter Meindl (2015). *Supply chain management : strategy, planning, and operation*. ISBN: 9780133800203.

Díaz-Madroñero, Manuel, Josefa Mula, and David Peidro (Sept. 2014). *A review of discrete-time optimization models for tactical production planning*. DOI: 10.1080/00207543.2014.899721.

— (Dec. 2017). "A mathematical programming model for integrating production and procurement transport decisions". In: *Applied Mathematical Modelling* 52, pp. 527–543. ISSN: 0307904X. DOI: 10.1016/j.apm.2017.08.009.

Díaz-Madroñero, Manuel, David Peidro, and Josefa Mula (Dec. 2014). "A fuzzy optimization approach for procurement transport operational planning in an automobile supply chain". In: *Applied Mathematical Modelling* 38.23, pp. 5705–5725. ISSN: 0307904X. DOI: 10.1016/j.apm.2014.04.053.

— (Oct. 2015). *A review of tactical optimization models for integrated production and transport routing planning decisions*. DOI: 10.1016/j.cie.2015.06.010.

Dominguez, Oscar et al. (Jan. 2016). "Using biased randomization for solving the two-dimensional loading vehicle routing problem with heterogeneous fleet". In: *Annals of Operations Research* 236.2, pp. 383–404. ISSN: 15729338. DOI: 10.1007/s10479-014-1551-4.

Dyckhoff, Harald (1990). *A typology of cutting and packing problems*. Tech. rep., pp. 145–159.

Fleischmann, Bernhard, Herbert Kopfer, and Christopher Sürie (Mar. 2015). "Transport Planning for Procurement and Distribution". In: *Supply Chain Management and Advanced Planning*. Ed. by Hartmut Stadtler, Christoph Kilger, and Herbert Meyr. Springer Texts in Business and Economics. Springer. Chap. 12, pp. 225–240. DOI: 10.1007/978-3-642-55309-7. URL: https://ideas.repec.org/h/spr/sptchp/978-3-642-55309-7_12.html.

Gonçalves, José Fernando and Mauricio G.C. Resende (Oct. 2013). "A biased random key genetic algorithm for 2D and 3D bin packing problems". In: *International Journal of Production Economics* 145.2, pp. 500–510. ISSN: 09255273. DOI: 10.1016/j.ijpe.2013.04.019.

Guo, Min et al. (2024). "Incentivising-by-penalty: The optimal return strategy for a reusable transport item rental platform". In: *Transportation Research Part D: Transport and Environment* 134, p. 104339. ISSN: 1361-9209. DOI: https://doi.org/10.1016/j.trd.2024.104339. URL: https://www.sciencedirect.com/science/article/pii/S1361920924002967.

Harrath, Youssef (Sept. 2022). "A three-stage layer-based heuristic to solve the 3D bin-packing problem under balancing constraint". In: *Journal of King Saud University - Computer and Information Sciences* 34 (8), pp. 6425–6431. ISSN: 22131248. DOI: 10.1016/j.jksuci.2021.07.007.

Hashemi-Amiri, Omid, Fahimeh Ghorbani, and Ran Ji (Jan. 2023). "Integrated supplier selection, scheduling, and routing problem for perishable product supply chain: A distributionally robust approach". In: *Computers and Industrial Engineering* 175. ISSN: 03608352. DOI: 10.1016/j.cie.2022.108845.

Hein, Fanny and Christian Almeder (July 2016). "Quantitative insights into the integrated supply vehicle routing and production planning problem". In: *International Journal of Production Economics* 177, pp. 66–76. ISSN: 09255273. DOI: 10.1016/j.ijpe.2016.04.014.

Junqueira, Leonardo, Reinaldo Morabito, and Denise Sato Yamashita (2012a). "MIP-based approaches for the container loading problem with multi-drop constraints". In: *Annals of Operations Research* 199.1, pp. 51–75. ISSN: 15729338. DOI: 10.1007/s10479-011-0942-z.

— (Jan. 2012b). "Three-dimensional container loading models with cargo stability and load bearing constraints". In: *Computers and Operations Research* 39.1, pp. 74–85. ISSN: 03050548. DOI: 10.1016/j.cor.2010.07.017.

Junqueira, Leonardo, José F. Oliveira, et al. (Sept. 2013). "An optimization model for the vehicle routing problem with practical three-dimensional loading constraints". In: *International Transactions in Operational Research* 20.5, pp. 645–666. ISSN: 09696016. DOI: 10.1111/j.1475-3995.2012.00872.x.

Kurpel, Deidson Vitorio et al. (July 2020). "The exact solutions of several types of container loading problems". In: *European Journal of Operational Research* 284.1, pp. 87–107. ISSN: 03772217. DOI: 10.1016/j.ejor.2019.12.012.

Langley, C. John et al. (2020). *Supply Chain Management: A Logistics Perspective*. 11th. Cengage Learning, pp. 413–452.

Li, Ying, Mingzhou Chen, and Jiazhen Huo (Mar. 2022). "A hybrid adaptive large neighborhood search algorithm for the large-scale heterogeneous container loading problem". In: *Expert Systems with Applications* 189. ISSN: 09574174. DOI: 10.1016/j.eswa.2021.115909.

Mahvash, Batoul, Anjali Awasthi, and Satyaveer Chauhan (2018). "A column generation-based heuristic for the three-dimensional bin packing problem with rotation". In: *Journal of the Operational Research Society* 69 (1), pp. 78–90. ISSN: 14769360. DOI: 10.1057/s41274-017-0186-7.

Meyer, Anne and Boris Amberg (May 2018). "Transport concept selection considering supplier milk runs – An integrated model and a case study from the automotive industry". In: *Transportation Research Part E: Logistics and Transportation Review* 113, pp. 147–169. ISSN: 13665545. DOI: 10.1016/j.tre.2017.07.004.

Mosca, Alyssa, Navneet Vidyarthi, and Ahmet Satir (Jan. 2019). *Integrated transportation – inventory models: A review*. DOI: 10.1016/j.orp.2019.100101.

Paquay, C, M Schyns, and S Limbourg (2016). "INTERNATIONAL TRANSACTIONS IN OPERATIONAL RESEARCH A mixed integer programming formulation for the three-dimensional bin packing problem deriving from an air cargo application". In: *Intl. Trans. in Op. Res* 23, pp. 187–213. DOI: 10.1111/itor.12111. URL: https://onlinelibrary.wiley.com/doi/10.1111/itor.12111.

Que, Quanqing, Fang Yang, and Defu Zhang (Mar. 2023). "Solving 3D packing problem using Transformer network and reinforcement learning". In: *Expert Systems with Applications* 214. ISSN: 09574174. DOI: 10.1016/j.eswa.2022.119153.

Sancak, Emre and F. Sibel Salman (June 2011). "Multi-item dynamic lot-sizing with delayed transportation policy". In: *International Journal of Production Economics* 131.2, pp. 595–603. ISSN: 09255273. DOI: 10.1016/j.ijpe.2011.02.004.

Schöneberg, Tim, Achim Koberstein, and Leena Suhl (Dec. 2010). "An optimization model for automated selection of economic and ecologic delivery profiles in area forwarding based inbound logistics networks". In: *Flexible Services and Manufacturing Journal* 22.3-4, pp. 214–235. ISSN: 19366582. DOI: 10.1007/s10696-011-9084-5.

— (Nov. 2013). "A stochastic programming approach to determine robust delivery profiles in area forwarding inbound logistics networks". In: *OR Spectrum* 35.4, pp. 807–834. ISSN: 01716468. DOI: 10.1007/s00291-013-0349-0.

Silva, Everton Fernandes, Túlio Angelo Machado Toffolo, and Tony Wauters (Sept. 2019). "Exact methods for three-dimensional cutting and packing: A comparative study concerning single container problems". In: *Computers and Operations Research* 109, pp. 12–27. ISSN: 03050548. DOI: 10.1016/j.cor.2019.04.020.

Soysal, Mehmet et al. (2023). "Managing returnable transport items in a vendor managed inventory system". In: *Socio-Economic Planning Sciences* 86, p. 101504. ISSN: 0038-0121. DOI: https://doi.org/10.1016/j.seps.2022.101504. URL: https://www.sciencedirect.com/science/article/pii/S0038012122003111.

Stadtler, Hartmut, Christoph Kilger, and Herbert Meyr (2015). *Supply Chain Management and Advanced Planning*. Vol. 5th Edition. URL: http://www.springer.com/series/10099.

Tresca, Giulia et al. (July 2022). "Automating Bin Packing: A Layer Building Matheuristics for Cost Effective Logistics". In: *IEEE Transactions on Automation Science and Engineering* 19 (3), pp. 1599–1613. ISSN: 15583783. DOI: 10.1109/TASE.2022.3177422.

Wäscher, Gerhard, Heike Haußner, and Holger Schumann (Dec. 2007). "An improved typology of cutting and packing problems". In: *European Journal of Operational Research* 183.3, pp. 1109–1130. ISSN: 03772217. DOI: 10.1016/j.ejor.2005.12.047.

Wei, Lijun et al. (June 2015). "A variable neighborhood search for the capacitated vehicle routing problem with two-dimensional loading constraints". In: *European Journal of Operational Research* 243.3, pp. 798–814. ISSN: 03772217. DOI: 10.1016/j.ejor.2014.12.048.

Zhang, Yipei et al. (2024). "Closed-loop inventory routing problem for perishable food with returnable transport items selection". In: *International Journal of Production Research* 62.1-2, pp. 501–521. DOI: 10.1080/00207543.2023.2275639. eprint: https://doi.org/10.1080/00207543.2023.2275639. URL: https://doi.org/10.1080/00207543.2023.2275639.

Zhao, Hang, Chenyang Zhu, and Hui Huang (2022). "Learning practically feasible policies for online 3D bin packing". In: 65.112105, p. 17. DOI: 10.1007/s11432-021-3348-6. URL: https://doi.org/10.1007/s11432-021-3348-6.

Zhao, Xiaozhou et al. (2016). "INTERNATIONAL TRANSACTIONS IN OPERATIONAL RESEARCH A comparative review of 3D container loading algorithms". In: *Intl. Trans. in Op. Res* 23, pp. 287–320. DOI: 10.1111/itor.12094. URL: https://onlinelibrary.wiley.com/doi/10.1111/itor.12094.

Zhu, Wenbin and Andrew Lim (Nov. 2012). "A new iterative-doubling Greedy-Lookahead algorithm for the single container loading problem". In: *European Journal of Operational Research* 222.3, pp. 408–417. ISSN: 03772217. DOI: 10.1016/j.ejor.2012.04.036.