last12

Service Network Design for RTI Transport Optimization

This paper proposes a new mixed integer linear mathematical programming (MILP) model, dubbed as SND-RTI (Service Network Design for Returnable Transport Items), for procurement transport planning in manufacturing supply chains. The model integrates transport decisions while accounting for managing returnable transport items (RTIs). Thus, we optimise the strategic decisions in terms of allocated RTIs, purchased RTIs, direct and return routes and Q-days. The optimisation model aims to minimise transportation and inventory costs. Regarding inventory and transport efficiency, the results of the 3D-SCPTOP model are superior to the company procedures.
Keywords— Procurement, inventory, transport planning, full-truckload, 3D container loading

1 Introduction

2 Literature Review

2.1 Research Gaps & Methodology

3 Problem Statement

Managing returnable transport items (RTIs) in a manufacturing supply chain is, at its core, a closed-loop logistics problem. Raw materials, parts and finished goods flow in one direction, from suppliers to customers, but the RTIs that carry them must flow back. The research question this paper addresses is the effectiveness of a collaborative return strategy of RTIs in a given SC, in which empty RTIs are rerouted and consolidated along the network, analysing economic and environmental costs. To answer this, we propose an optimisation model that determines the optimal return routes for empty RTIs, the shipment frequency on each route, and the minimum RTI pool to prevent production disruptions thereby defining the service network desing for RTIs.

We model the SC as a directed graph $G = (V, E)$, where each node $i \in V$ represents a manufacturing site and each arc $(i, j) \in E$ represents a potential transport route, both for emtpy and full RTIs. Figure 1 illustrates a SC network, where nodes are manufacturing sites and the black arcs represent the daily average flows of full RTIs driven by production demand. Each product family requires a specific RTI type, and the number of RTIs needed per shipment depends on how many raw materials, parts or finished goods fit in a single RTI, as shown in Figure 2.

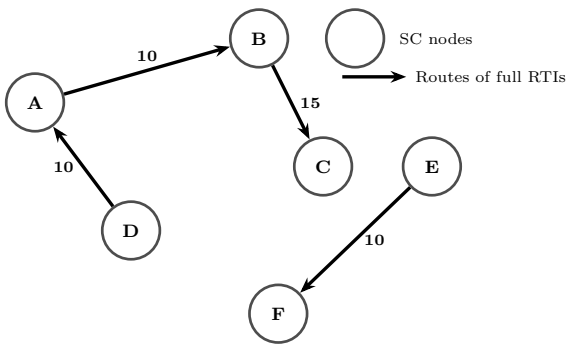

Figure 1: Full RTIs routes

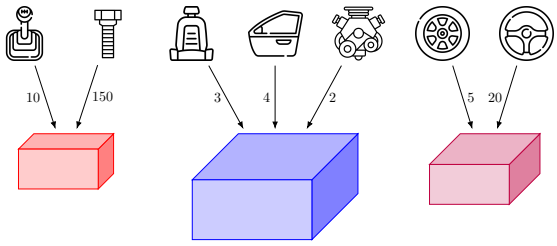

Figure 2: Product quantities per RTI

An RTI exists in one of two states: *full*, when loaded with raw materials, parts and finished goods, or *empty*, once its contents have been consumed at the destination site. Some RTIs can be folded, reducing their volume to decrease transport costs, as shown in Figure 3. The simplest RTI return strategy is a one-to-one relationship, i.e., for every shipment of full RTIs a supplier sends to a customer, the customer must return the empty RTIs along the same route, as depicted in Figure 4. This strategy is operationally straightforward, since each pair of nodes only coordinates with each other. However, it is rarely cost-optimal in large SCs, as it ignores consolidation opportunities along the SC and tends to result in both excessive empty RTIs transport costs and a larger RTI pool than strictly necessary, which implies higher RTI investment and inventory costs.

Figure 3: Full and empty folded RTIs

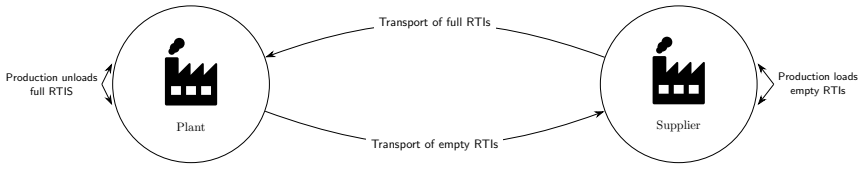

Figure 4: One-to-one RTI return strategy

When a central decision-maker, such as a dominant tier-1 manufacturer, an original equipment manufacturer (OEM) that owns the RTI pool, or a SC platform acting as manufacturing as a service (MaaS) Add reference, has visibility over the entire network, a collaborative RTI return strategy becomes possible. Rather than using a one-to-one RTI return strategy, the model optimises empty RTI routes, reducing the total distance an empty RTI journeys and consolidating routes. This simultaneously diminishes RTI return costs and the overall RTI pool size. Figure 5a shows the one-to-one baseline, while Figure 5b illustrates how an optimised collaborative strategy reduces RTI return transport costs on the same network. Determining the service network design is the primary objective of this research.

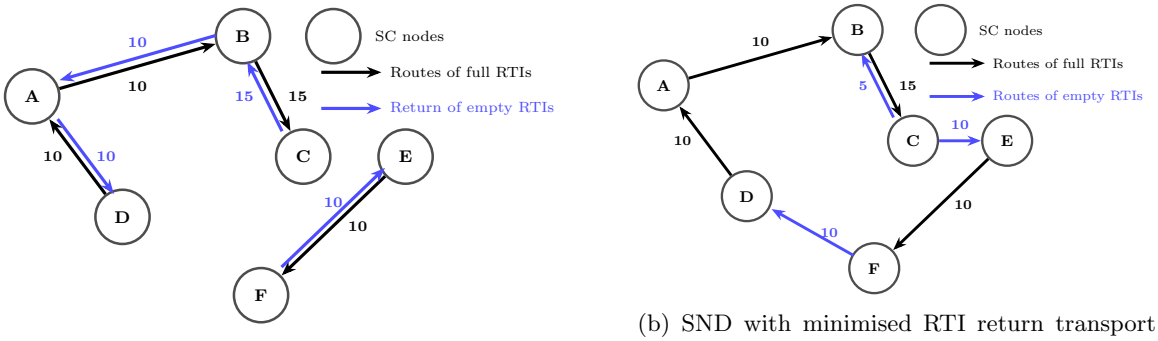

(a) *One-to-one* relationship

(b) SND with minimised RTI return transport cost

Figure 5: SND with minimised RTI return transport cost

On certain routes, full RTIs are accompanied by protective accessories, such as nets or lids, that secure parts during transit. These *inlays* are themselves reusable and must be returned to the origin site after unloading. Here the FTL and LTL, also known as groupage, transport modes are addressed.

The model takes as input data the average daily flows of full RTIs between nodes, derived from realesed production plans over a planning horizon chosen by the decision-maker, typically a month, quarter, or year. These averages are assumed to be representative of the considered planning horizon, meaning that demands are sufficiently stable daily demands for the average to serve as a reliable input data, without extreme imbalances that would render it misleading. Under this assumption, the problem can be considered a service network design for RTIs, which consists of finding the tradeoff among daily RTI transport cost, which include transport costs for both full and empty RTIs; the inventory holding cost of the RTI pool; and CO_2 emissions from RTI transport.

1. Routes for empty RTI and inlay return flows.
2. The shipment frequency per route, expressed as a *queue time* (Q-day), i.e. the number of days between consecutive dispatches.
3. The transport mode per route, i.e. FTL or LTL.
4. The total number of RTIs needed in the whole SC network.

The problem encompasses a strategic-tactical decision level, using as input data the daily averages of RTI demand flows. In practice, the daily avarage flow of full RTIs between nodes is managed by medium-to-long-term production contracts and procurement agreements, which should remain stable over the planning horizon under consideration. The Q-days and transport modes are likewise set with a medium-to-long-term frequency rather than renegotiated daily or weekly. By optimising strategic-tactical decisions for a given planning horizon, instead of multi-period decisions, the model is computationally efficient even for large industrial networks, where a fully operational multi-period optimisation could be intractable time-consumption. Here, the strategic-tactical perspective provides a scalable upper bound on the achievable savings from collaborative RTI management, by establishing tranport routes, Q-days and the RTI pool size, which can subsequently serve as input data for operational-level RTI tranport planning.

4 Model Formulation

We introduce the following convention to reduce the notation overhaul.

Convention 1 (Index suppression and aggregation from the root variable).
Every variable in the model is defined with a set of root indices. For example, the variable ϕ_{cijm} is defined for $(c \in C, i \in V, j \in V, m \in \mathcal{M})$; we call this the root variable. Writing a variable with fewer indices always denotes a derived variable: one or more indices have been suppressed and the root values aggregated according to the rules below.

Rule 1 (Sum aggregation). Dropping indices from any variable denotes the sum of the root variable over every value of those indices:

$$\phi_{cij} := \sum_{m \in \mathcal{M}} \phi_{cijm}, \qquad \phi_{ijm} := \sum_{c \in C} \phi_{cijm}, \qquad \phi := \sum_{c \in C} \sum_{i \in V} \sum_{j \in V} \sum_{m \in \mathcal{M}} \phi_{cijm}.$$

For continuous and integer variables, this is the natural interpretation. For binary variables, the result is an *integer count* of how many root-level binaries in the group equal 1; it is not itself binary. For example, $X_{cij} \coloneqq \sum_{m \in \mathcal{M}} X_{cijm}$ counts active modes for type c on lane (i, j) and takes values in $\{0, 1, \ldots, |\mathcal{M}|\}$.

Sum aggregation is primarily a notational shorthand. However, we can also explicitly introduce derived variables to the model (e.g., ϕ_{cij}) and define the associated equality constraint:

$$\phi_{cij} = \sum_{m \in \mathcal{M}} \phi_{cijm} \quad \forall c \in C, (i, j) \in E \tag{1}$$

Rule 2 (Dot notation for the node-pair (i, j)). The root variable carries two active indices from the same set V. Suppressing one while keeping the other would be ambiguous, so a dot ($\cdot$) marks the suppressed position:

$$\phi_{c \cdot jm} \coloneqq \sum_{i \in V} \phi_{cijm}, \qquad \phi_{ci \cdot m} \coloneqq \sum_{j \in V} \phi_{cijm}.$$

Rule 1 applies as normal: the result is a sum or an integer count.

Rule 3 (OR-aggregated binaries). A new binary decision variable ($\overline{X}$) is introduced to represent a logical *OR*, linked to the sum aggregate X_{cij} via:

$$\overline{X}_{cij} \leq X_{cij} \tag{2}$$

$$X_{cij} \leq |\mathcal{M}| \cdot \overline{X}_{cij} \tag{3}$$

Together, these enforce $\overline{X}_{cij} = 1 \iff X_{cij} \geq 1$.

Rule 4 (At-most-one aggregation). When at most one commodity type may be active on a lane, a new binary $\widehat{X}_{cij}$ is introduced and linked to the sum aggregate X_{cij} by:

$$\widehat{X}_{cij} \leq X_{cij} \tag{4}$$

$$X_{cij} \leq \widehat{X}_{cij} \tag{5}$$

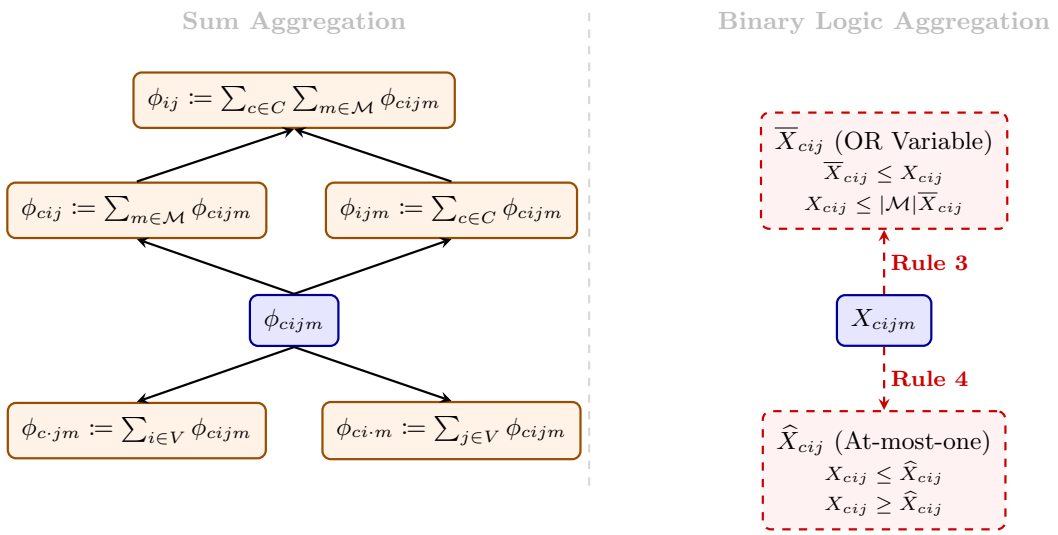

Figure 6: Derivation lattice: Sum Aggregation (left) and Binary Logic Aggregation (right).

Table 1: Model nomenclature

Indices and Sets

V	Set of nodes representing manufacturing plants; $i, j \in V$
E	Set of directed edges representing potential transport routes; $E = V \times V$
R	Set of RTIs types $r \in R$ in the SC
$\mathcal{M}$	Set of tranpost modes $m \in \mathcal{M}$ in the SC
H	Set hubs in the supply chanin $H \subset V$
Parameters	
μ_{ijpr}	Daily average demand on route (i, j) of product p, if RTI type r, expressed in full RTI units
ric_{ijpr}	Fraction of full shipments on route (i, j) that require a return inlay
$bf_{ijmpr}, bi_{ijmpr}, be_{ijmpr}$	Binary parameter indicating full RTI, return inlay RTIs, and empty RTI can traverse route (i, j) of type r, respectively
bm_{ijm}	Binary parameter indicating if route (i, j) can transport RTIs with transport mode m
bp_{ijp}	Binary parameter indicating if route (i, j) has to tranport full RTIs of type r
c_{ijm}	Transport cost per unit volume on route (i, j)
f_{ijm}	Fixed dispatch cost per shipment on route (i, j)
$v^f,\ v^e$	Volume occupied by one full and one empty RTI, respectively
l_{ijm}	Transit time on route (i, j), in days
$q^{\min},\ q^{\max}$	Minimum and maximum queue time, in days
$\alpha^f,\ \alpha^e$	Maintenance loss factor applied to full and empty RTIs, respectively
$ssf^i_{ijmpr},\ ssf^j_{ijmpr}$	Safety stock of full RTIs held at the origin and destination node of route (i, j), respectively
$sse^i_{ijmpr},\ sse^j_{ijmpr}$	Safety stock of empty RTIs held at the origin and destination node of route (i, j), respectively
$\omega_{ijm},\ \delta_{ijm}$	Minimum and maximum shipment volume on route (i, j)
s^{RTI}	Initial pool of RTIs available before optimisation
p^{RTI}	Unit purchase cost of one RTI
M	Sufficiently large constant (big-M)
Decision Variables	
Binary variables	
X_{ijmpr}, XF_{ijmpr}, XI_{ijmpr}, XE_{ijmpr}	Equal to 1 if route (i, j) carries any RTIs, full RTIs, return inlays, or empty RTIs, respectively; 0 otherwise
Daily flow variables	
N_{ijmpr}, NF_{ijmpr}, NI_{ijmpr}, NE_{ijmpr}	Daily average number of RTIs, full RTIs, return inlays, and empty RTIs on route (i, j), respectively
V_{ijmpr}, VF_{ijmpr}, VI_{ijmpr}, VE_{ijmpr}	Daily average volume of RTIs, full RTIs, return inlays, and empty RTIs on route (i, j), respectively
Per-shipment variables	
q_{ijm}	Queue time on route (i, j): days between consecutive dispatches;
NS_{ijmpr}, NSF_{ijmpr}, NSI_{ijmpr}, NSE_{ijmpr}	Total number of RTIs, full RTIs, return inlays, and empty RTIs per shipment on route (i, j), respectively
VS_{ijmpr}, VSF_{ijmpr}, VSI_{ijmpr}, VSE_{ijmpr}	Total volume, full RTI volume, return inlay volume, and empty RTI volume per shipment on route (i, j), respectively
RTI pool variables	
TNC_{ijmpr}, $TNCF_{ijmpr}$, $TNCE_{ijmpr}$, $TNCI_{ijmpr}$	Total RTIs, full RTIs, empty RTIs, and inlay RTIs allocated to route (i, j), accounting for queue stock, in-transit stock, safety stock, and losses
P_r	Additional RTIs to purchase; $P \geq 0$
Cost variables	
TCS_{ijm}	Transport cost per shipment on route (i, j)
TC_{ijm}	Daily transport cost on route (i, j)
HC_i	Daily transport cost of hub $i \in H$

Objective function. Minimise total daily transport cost across all routes, plus the amortised purchase cost of any additional RTIs required:

$$\min \quad TC \; + \sum_{r \in R} p_r^{\text{RTI}} \cdot P_r + CH \tag{6}$$

Flow conservation. The closed-loop balance must hold at every node:

$$N_{i \cdot r} = N_{\cdot ir} \qquad \forall\, i \in V \tag{7}$$

Flow–binary consistency. Each binary is active if and only if the corresponding daily flow is positive:

$$NF_{ijmpr} \leq M \cdot XF_{ijmpr} \quad XF_{ijmpr} \leq NF_{ijmpr} \cdot bf_{ijmpr} \qquad \forall\,(i,j) \in E \tag{8}$$

$$NI_{ijmpr} \leq M \cdot XI_{ijmpr} \quad XI_{ijmpr} \leq NI_{ijmpr} \cdot bi_{ijmpr} \qquad \forall\,(i,j) \in E \tag{9}$$

$$NE_{ijmpr} \leq M \cdot XE_{ijmpr} \quad XE_{ijmpr} \leq NE_{ijmpr} \cdot be_{ijmpr} \qquad \forall\,(i,j) \in E \tag{10}$$

Route activation. A route is active if and only if it carries full, empty, or inlay RTIs:

$$3 \cdot X_{ijmpr} \geq XF_{ijmpr} + XE_{ijmpr} + XI_{ijmpr} \qquad \forall\,(i,j) \in E \tag{11}$$

$$X_{ijmpr} \leq XF_{ijmpr} + XE_{ijmpr} + XI_{ijmpr} \qquad \forall\,(i,j) \in E \tag{12}$$

Full Routes activation A route carries full RTIs only if average daily demand is positive:

$$\widehat{XF}_{ijp} = bp_{ijp} \qquad \forall\,(i,j) \in E \tag{13}$$

Extension M — Transport Modes.

$$\overline{X}_{ijm} \leq bm_{ijm} \qquad \forall\,(i,j) \in E,\; m \in \mathcal{M} \tag{14}$$

$$\sum_{m \in \mathcal{M}} \overline{X}_{ijm} \leq 1 \qquad \forall\,(i,j) \in E \tag{15}$$

where $\widehat{X}_{ij}$ is the at-most-one aggregate binary (Rule 4) equal to 1 if exactly one mode is active on route (i,j).

Hub Nodes. Hub nodes $i \in H \subseteq V$ are intermediate consolidation points that aggregate outgoing flows and incur a handling cost. The parameter $fhc_i \geq 0$ is the fixed cost of activating hub i, and $vhc_i \geq 0$ is the variable cost per unit volume handled at hub i.

Hub nodes $i \in H$ are unconstrained. At every non-hub node $i \in V \setminus H$ the incoming and outgoing empty-flow binaries are linked to aggregated flows via Rule 3 and forced mutually exclusive.

$$\overline{XE}_{\cdot ir} + \overline{XE}_{i \cdot r} \leq 1 \qquad \forall\, i \in V \setminus H \tag{16}$$

For every hub node $i \in H$, the following equations define the hub activation binary XH_i, the total volume VH_i flowing through hub i, and the resulting hub cost CH_i:

$$XH_i = \overline{X}_{i\cdot} \qquad \forall\, i \in H \tag{17}$$

$$VH_i = V_{i\cdot} \qquad \forall\, i \in H \tag{18}$$

$$CH_i = fhc_i \cdot XH_i + vhc_i \cdot VH_i \qquad \forall\, i \in H \tag{19}$$

where $\overline{X}_{i\cdot} := \sum_{j \in V} \overline{X}_{ij}$ and $V_{i\cdot} := \sum_{j \in V} V_{ij}$ are the aggregated outgoing activation binary and total volume at node i.

Full RTIs route flow The daily full-RTI flow on route (i,j) equals demand if and only if the route is active:

$$NF_{ijmpr} = \mu_{ijmpr} \cdot X_{ijmpr} \qquad \forall\,(i,j) \in E \tag{20}$$

Inlay return flows. Return inlays are sent back on the reverse route in proportion to the full shipments that required them:

$$NI_{ji} = ric_{ijmpr} \cdot \mu_{ijmpr} \cdot X_{ijmpr} \qquad \forall\,(i,j) \in E \tag{21}$$

Daily average volumes. Full and inlay RTIs occupy volume v^f; empty RTIs occupy v^e:

$$VF_{ijmpr} = NF_{ijmpr} \cdot v^f \qquad \forall\,(i,j) \in E \tag{22}$$

$$VI_{ijmpr} = NI_{ijmpr} \cdot v^f \qquad \forall\,(i,j) \in E \tag{23}$$

$$VE_{ijmpr} = NE_{ijmpr} \cdot v^e \qquad \forall\,(i,j) \in E \tag{24}$$

$$V_{ijmpr} = VF_{ijmpr} + VI_{ijmpr} + VE_{ijmpr} \qquad \forall\,(i,j) \in E \tag{25}$$

Per-shipment RTI counts. RTIs accumulated between dispatches are proportional to the queue time. These are *nonlinear* and will be linearised in Section **??**:

$$NSF_{ijmpr} = NF_{ijmpr} \cdot q_{ijmpr} \qquad \forall\,(i,j) \in E \tag{26}$$

$$NSI_{ijmpr} = NI_{ijmpr} \cdot q_{ijmpr} \qquad \forall\,(i,j) \in E \tag{27}$$

$$NSE_{ijmpr} = NE_{ijmpr} \cdot q_{ijmpr} \qquad \forall\,(i,j) \in E \tag{28}$$

$$NS_{ijmpr} = NSF_{ijmpr} + NSI_{ijmpr} + NSE_{ijmpr} \qquad \forall\,(i,j) \in E \tag{29}$$

Per-shipment volumes. Full and inlay RTIs occupy volume v^f; empty RTIs occupy v^e:

$$VSF_{ijmpr} = VF_{ijmpr} \cdot q_{ijmpr} \qquad \forall\,(i,j) \in E \tag{30}$$

$$VSI_{ijmpr} = VI_{ijmpr} \cdot q_{ijmpr} \qquad \forall\,(i,j) \in E \tag{31}$$

$$VSE_{ijmpr} = VE_{ijmpr} \cdot q_{ijmpr} \qquad \forall\,(i,j) \in E \tag{32}$$

$$VS_{ijmpr} = VSF_{ijmpr} + VSI_{ijmpr} + VSE_{ijmpr} \qquad \forall\,(i,j) \in E \tag{33}$$

Queue time bounds. The queue time is bounded and only meaningful when the route is active:

$$q_m^{\min} \cdot \overline{X}_{ijm} \;\le\; q_{ijm} \;\le\; q_m^{\max} \cdot \overline{X}_{ijm} \qquad \forall\,(i,j) \in E \tag{34}$$

Shipment volume bounds. Each active route must respect a minimum load and a maximum vehicle capacity:

$$\omega_{ijm} \cdot \overline{X}_{ijm} \;\le\; VS_{ijm} \;\le\; \delta_{ijm} \cdot \overline{X}_{ijm} \qquad \forall\,(i,j) \in E \tag{35}$$

Total RTI pool requirements. The RTIs allocated to each route cover queue stock, in-transit stock, safety stock at both endpoints, and a maintenance loss margin:

$$TNCF_{ijmpr} = (1+\alpha^f)\Big(NSF_{ijmpr} + l_{ijmpr} \cdot NF_{ijmpr} + XF_{ijmpr}\big(ssf^i_{ijpr} + ssf^j_{ijpr}\big)\Big) \qquad \forall\,(i,j) \in E \tag{36}$$

$$TNCE_{ijmpr} = (1+\alpha^e)\Big(NSE_{ijmpr} + l_{ijmpr} \cdot NE_{ijmpr} + XE_{ijmpr}\big(sse^i_{ijpr} + sse^j_{ijpr}\big)\Big) \qquad \forall\,(i,j) \in E \tag{37}$$

$$TNCI_{ijmpr} = (1+\alpha^f)(NSI_{ijmpr} + l_{ijmpr} \cdot NI_{ijmpr}) \qquad \forall\,(i,j) \in E \tag{38}$$

$$TNC_{ijmpr} = TNCF_{ijmpr} + TNCE_{ijmpr} + TNCI_{ijmpr} \qquad \forall\,(i,j) \in E \tag{39}$$

RTI purchase. The network purchases any shortfall between the total pool requirement and the existing stock:

$$TNC_p \le s_p^{\mathrm{RTI}} + P_p, \qquad P_p \ge 0 \tag{40}$$

Daily transport costs. The per-shipment cost combines a volumetric charge and a fixed dispatch cost. Dividing by the queue time converts it to a daily equivalent; this division is *nonlinear* and will be linearised in Section **??**:

$$TCS_{ijm} = VS_{ijm} \cdot c_{ijm} + X_{ijm} \cdot f_{ijm} \qquad \forall\,(i,j) \in E \tag{41}$$

$$TC_{ijm} \cdot q_{ijm} = TCS_{ijm} \qquad \forall\,(i,j) \in E \tag{42}$$

4.1 Model variations

5 Model Extensions

The base model can be extended by activating any subset of five independent additions: **M** (transport modes), **R** (RTI types), **H** (hub nodes), **P** (explicit product flows), and **L** (linearisation of the queue-time products). Extensions M, R, H, and L are fully self-contained and can be activated in any combination without restriction. Extension P, however, is *not* independent: it requires Extension R to be active, since product-level flows NF_{ijpr} are indexed over RTI types $r \in R$, which are introduced exclusively by Extension R. The dependency structure is depicted in Figure 7.

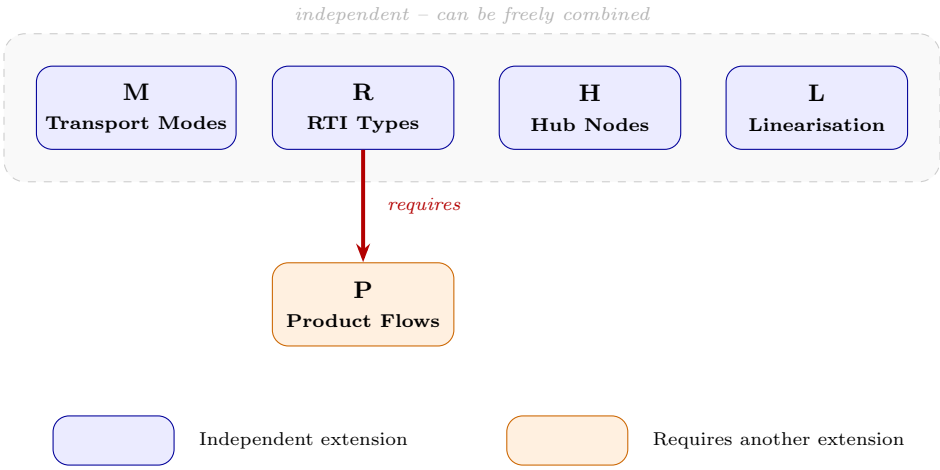

Figure 7: Extension dependency graph. Extensions **M**, **R**, **H**, and **L** are mutually independent and may be combined freely. Extension **P** (explicit product flows) requires Extension **R** (multiple RTI types) to be active, because product-level demand d_{ijp} is converted into RTI quantities via the type-specific factor η_{pr}.

Extensions M, R, H, and P each introduce a new set with its index, replacing the root variables of the model by adding an additional index. Extension L is qualitatively different: it does not add an index to existing variables but instead discretises the continuous queue time q_{ij} over a finite set $\mathcal{Q}_{ij}$ of admissible integer values in order to discretise the model. The result is a pure MILP formulation with no nonlinear terms.

Each extension operates through two mechanisms.

1. **Index addition or variable introduction.** Table 2 lists, for every symbol, which extensions add an index to the variable or parameter or introduce a new symbol (**New**), either a variable or parameter. Symbols marked $\circ$ in a column are unaffected; symbols marked $\times$ are replaced by derived expressions (Section 5.1).
2. **Constraint transformation.** Table **??** records, for every base constraint, what each active extension does to it. Extensions not listed for a constraint leave it unchanged ($\circ$). Unless specified, a constraint is transformed automatically if a variable that appears in it is transformed, by iterating over the new set, that is, if an index is added to a variable or parameter.

Table 2: Index promotion and variable introduction map. $+m/+r$: extension adds the indicated index to this symbol. **New**: symbol is introduced by this extension. $\circ$: unaffected. $\times$: replaced by a derived expression. For Ext. L the k subscript ranges over $\mathcal{Q}_{ij}$; if Ext. M is also active, replace (i,j) by (i,j,m) throughout.

Symbol	**Base form**	**M**	**R**	**H**	**P**	**L**
Sets						
$\mathcal{M}$	—	**New**	$\circ$	$\circ$	$\circ$	$\circ$
$R,\ R_{ij}$	—	$\circ$	**New**	$\circ$	$\circ$	$\circ$
$H \subseteq V$	—	$\circ$	$\circ$	**New**	$\circ$	$\circ$
$\mathcal{P},\ \mathcal{P}_r$	—	$\circ$	$\circ$	$\circ$	**New**	$\circ$
$\mathcal{Q}$	—	$\circ$	$\circ$	$\circ$	$\circ$	**New**
Parameters						
μ_{ij}	(i,j)	$\circ$	$+r$	$\circ$	$\times$	$\circ$
ric_{ij}	(i,j)	$\circ$	$+r$	$\circ$	$\circ$	$\circ$
$bf_{ij},\ be_{ij},\ bi_{ij}$	(i,j)	$\circ$	$+r$	$\circ$	$\times$	$\circ$
c_{ij}	(i,j)	$+m$	$\circ$	$\circ$	$\circ$	$\circ$
f_{ij}	(i,j)	$+m$	$\circ$	$\circ$	$\circ$	$\circ$
$v^f,\ v^e$	scalar	$\circ$	$+r$	$\circ$	$\circ$	$\circ$
$q^{\min},\ q^{\max}$	scalar	$+m$	$\circ$	$\circ$	$\circ$	$\times$
$\omega_{ij},\ \delta_{ij}$	(i,j)	$+m$	$\circ$	$\circ$	$\circ$	$+q$
$ssf,\ sse$	(i,j)	$\circ$	$+r$	$\circ$	$\circ$	$\circ$
$s^{\mathrm{RTI}},\ p^{\mathrm{RTI}}$	scalar	$\circ$	$+r$	$\circ$	$\circ$	$\circ$
$l_{ij},\ \alpha^f,\ \alpha^e$	(i,j)/scalar	$\circ$	$\circ$	$\circ$	$\circ$	$\circ$
d_{pij}	—	$\circ$	$\circ$	$\circ$	**New**	$\circ$
η_{pr}	—	$\circ$	$\circ$	$\circ$	**New**	$\circ$
bm_{ijm}	—	**New**	$\circ$	$\circ$	$\circ$	$\circ$
$fhc_i,\ vhc_i$	—	$\circ$	$\circ$	**New**	$\circ$	$\circ$
Binary variables						
$X_{ij},\ XF_{ij},\ XI_{ij},\ XE_{ij}$	(i,j)	$+m$	$+r$	$\circ$	$\circ$	$+q$
XH_i	(i)	$\circ$	$\circ$	**New**	$\circ$	$\circ$
Flow variables						
$NF_{ij},\ NI_{ij},\ NE_{ij}$	(i,j)	$+m$	$+r$	$\circ$	$\circ$	$+q$
q_{ij}	(i,j)	$+m$	$+r$	$\circ$	$\circ$	$\times$
$NS_{ij},\ NSF_{ij},\ NSI_{ij},\ NSE_{ij}$	(i,j)	$+m$	$+r$	$\circ$	$\circ$	$+q$
VH_i	(i)	$\circ$	$\circ$	**New**	$\circ$	$\circ$
CH_i	(i)	$\circ$	$\circ$	**New**	$\circ$	$\circ$
$VS_{ij},\ VSF_{ij},\ VSI_{ij},\ VSE_{ij}$	(i,j)	$+m$	$+r$	$\circ$	$\circ$	$+q$
$TNCF_{ij},\ TNCE_{ij},\ TNCI_{ij}$	(i,j)	$+m$	$+r$	$\circ$	$\circ$	$+q$
P	scalar	$\circ$	$+r$	$\circ$	$\circ$	$\circ$
$TC_{ij},\ TCS_{ij}$	(i,j)	$+m$	$+r$	$\circ$	$\circ$	$+q$

5.1 New Constraints Introduced by Each Extension

Extension M — Transport Modes. When multiple transport modes $m \in \mathcal{M}$ are available on each route, the binary X_{ijm} indicates whether mode m is used on route (i,j). The parameter $bm_{ijm} \in \{0,1\}$ encodes which modes are physically admissible on each route. Two rules govern mode selection.
Admissibility. A mode may only be selected if it is admissible on that route:

$$\overline{X}_{ijm} \leq bm_{ijm} \qquad \forall\,(i,j) \in E,\ m \in \mathcal{M} \tag{43}$$

where $\overline{X}_{ijm}$ is the OR-aggregate binary (Rule 3) indicating that mode m carries at least one RTI type on route (i,j).
At-most-one mode per route. Equation (**??**) is replaced by (44) to enforce that at most one transport mode

is selected per route:

$$\widehat{X}_{ij} \leq bf_{ij} + be_{ij} + bi_{ij} \qquad \forall\,(i,j) \in E \tag{44}$$

where $\widehat{X}_{ij}$ is the at-most-one aggregate binary (Rule 4) equal to 1 if exactly one mode is active on route (i,j).

Extension R — RTI Types. When multiple RTI types $r \in R_{ij}$ are available on route (i,j), the binary XF_{ijr} indicates whether RTI type r carries full loads on that route. Extension R replaces the single-type full-route activation (13) with a per-type rule.

Each route commits to exactly one admissible RTI type (Rule 4); demand and inlay flows are conditioned on the selected type. Equation (13) is replaced by (45) to enforce only ~~different~~ admissible full RTI types are sent on each active route:

$$\overline{XF}_{ijr} = bf_{ijr} \qquad \forall\,(i,j) \in E,\ r \in R_{ij} \tag{45}$$

where $\overline{XF}_{ijr}$ is the OR-aggregate binary (Rule 3) indicating that RTI type r is used for full loads on route (i,j), and $bf_{ijr} = 1$ if type r may carry full loads on route (i,j).

Equation (**??**) is replaced by (46) to ensure a route is only activated when at least one admissible RTI type exists on it:

$$\overline{X}_{ij} \leq \sum_{r \in R_{ij}} \left(bf_{ijr} + be_{ijr} + bi_{ijr}\right) \qquad \forall\,(i,j) \in E \tag{46}$$

where $\overline{X}_{ij}$ is the OR-aggregate binary (Rule 3) equal to 1 if route (i,j) carries any RTI type.

Extension H — Hub Nodes. Hub nodes $i \in H \subseteq V$ are intermediate consolidation points that aggregate outgoing flows and incur a handling cost. The parameter $fhc_i \geq 0$ is the fixed cost of activating hub i, and $vhc_i \geq 0$ is the variable cost per unit volume handled at hub i.

Hub nodes $i \in H$ are unconstrained. At every non-hub node $i \in V \setminus H$ the incoming and outgoing empty-flow binaries are linked to aggregated flows via Rule 3 and forced mutually exclusive. The index r appears only when Ext. R is also active:

$$\overline{XE}_{\cdot i} + \overline{XE}_{i\cdot} \leq 1 \qquad \forall\, i \in V \setminus H \tag{47}$$

For every hub node $i \in H$, the following equations define the hub activation binary XH_i, the total volume VH_i flowing through hub i, and the resulting hub cost CH_i:

$$XH_i = \overline{X}_{i\cdot} \qquad \forall\, i \in H \tag{48}$$

$$VH_i = V_{i\cdot} \qquad \forall\, i \in H \tag{49}$$

$$CH_i = fhc_i \cdot XH_i + vhc_i \cdot VH_i \qquad \forall\, i \in H \tag{50}$$

where $\overline{X}_{i\cdot} := \sum_{j \in V} \overline{X}_{ij}$ and $V_{i\cdot} := \sum_{j \in V} V_{ij}$ are the aggregated outgoing activation binary and total volume at node i. The hub cost is added to the objective function (6):

$$\min \quad \sum_{(i,j) \in E} TC_{ij} + p^{\mathrm{RTI}} \cdot P + \sum_{i \in H} CH_i \tag{51}$$

Extension P — Explicit Product Flows (requires Extension R). Extension P disaggregates the aggregate daily demand μ_{ij} into product-level flows NF_{ijpr}, indexed by product $p \in \mathcal{P}$ and RTI type $r \in R_{ij}$. The parameter $d_{ijp} \geq 0$ is the average daily demand of product p on route (i,j) in product units, and $\eta_{pr} > 0$ is the number of product-p units that fit in one RTI of type r. Because the RTI-type index r is introduced by Extension R, Extension P cannot be used without it.

The average daily demand in RTI units is:

$$\mu_{ijpr} = \frac{d_{ijp}}{\eta_{pr}} \qquad \forall\,(i,j) \in E,\ r \in R_{ij},\ p \in \mathcal{P}_r \tag{52}$$

The daily full-RTI flow for product p using RTI type r on route (i,j) is:

$$NF_{ijpr} = \mu_{ijpr} \cdot XF_{ijpr} \qquad \forall\,(i,j) \in E,\ r \in R_{ij},\ p \in \mathcal{P}_r \tag{53}$$

Equation (13) is replaced by (54) to enforce that for each product p, at most one admissible RTI type is selected per route:

$$\widehat{XF}_{ijp} = bf_{ijp} \qquad \forall\,(i,j) \in E,\ p \in \mathcal{P} \tag{54}$$

where $\widehat{XF}_{ijp}$ is the at-most-one binary (Rule 4) equal to 1 if product p is assigned to exactly one RTI type on route (i,j), and $bf_{ijp} = 1$ if at least one RTI type admissible for product p exists on route (i,j).

Extension L — Linearisation of products of two decision variables.