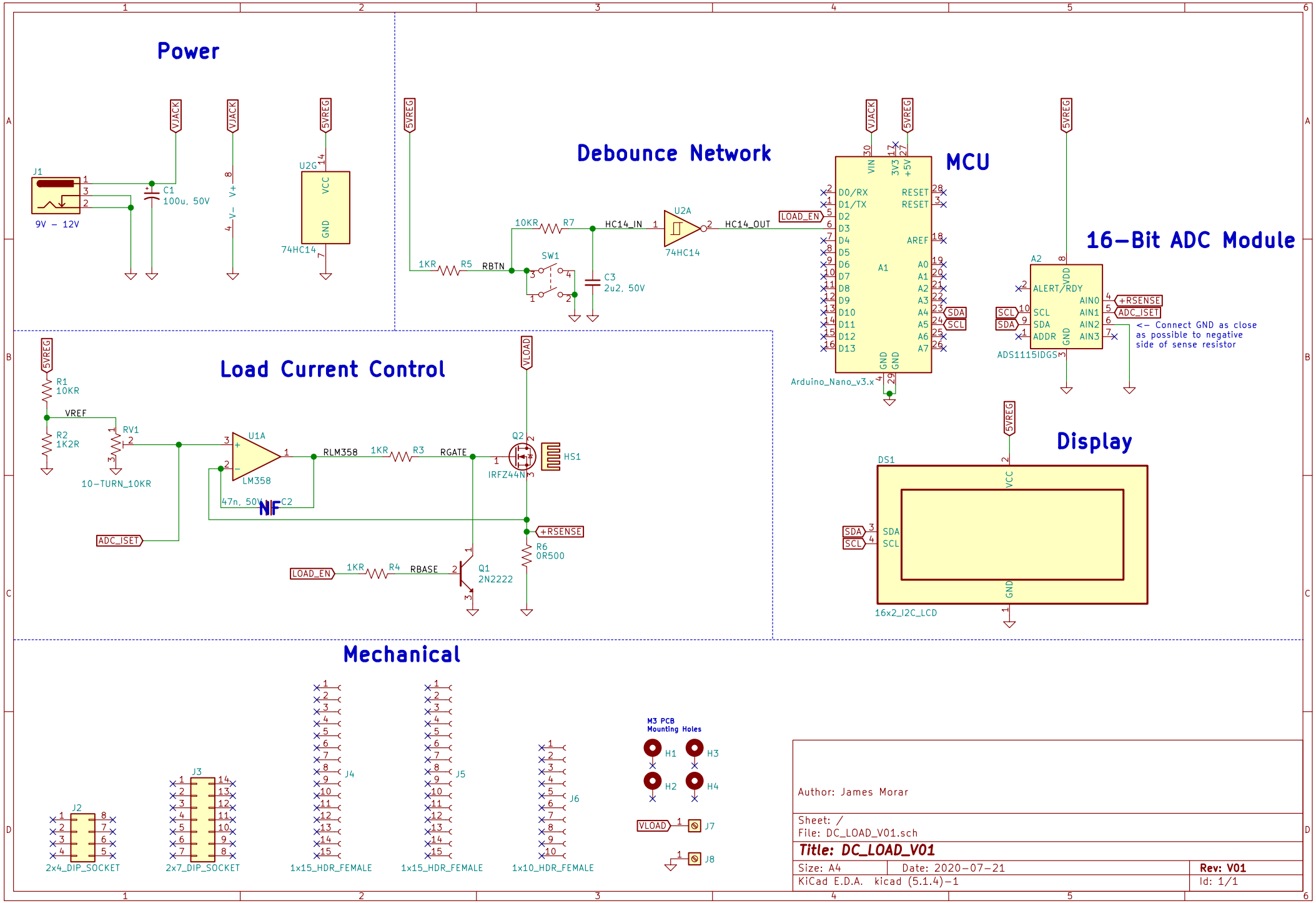
Power
J1
9V – 12V
C1
100u, 50V
VJACK
V+
V–
U2G
VCC
GND
74HC14
5VREG
Debounce Network
1KR
R5
RBTN
10KR
R7
SW1
C3
2u2, 50V
HC14_IN
U2A
74HC14
HC14_OUT
MCU
LOAD_EN
VIN
3V3
+5V
D0/RX
D1/TX
D2
D3
D4
D5
D6
D7
D8
D9
D10
D11
D12
D13
RESET
AREF
A0
A1
A2
A3
A4
A5
A6
A7
SDA
SCL
GND
A1
Arduino_Nano_v3.x
16–Bit ADC Module
A2
ALERT/RDY
VDD
SCL
SDA
ADDR
AIN0
AIN1
AIN2
AIN3
+RSENSE
ADC_ISET
ADS1115IDGS
<– Connect GND as close as possible to negative side of sense resistor
Load Current Control
R1
10KR
VREF
R2
1K2R
RV1
10–TURN_10KR
U1A
LM358
RLM358
1KR
R3
RGATE
Q2
IRFZ44N
HS1
VLOAD
47n, 50V
C2
NF
ADC_ISET
+RSENSE
R6
0R500
LOAD_EN
1KR
R4
RBASE
Q1
2N2222
Display
DS1
VCC
SDA
SCL
GND
16x2_I2C_LCD
Mechanical
J2
2x4_DIP_SOCKET
J3
2x7_DIP_SOCKET
J4
1x15_HDR_FEMALE
J5
1x15_HDR_FEMALE
J6
1x10_HDR_FEMALE
M3 PCB
Mounting Holes
H1
H2
H3
H4
VLOAD
J7
J8
Author: James Morar
Sheet: /
File: DC_LOAD_V01.sch
Title: DC_LOAD_V01
Size: A4
Date: 2020–07–21
Rev: V01
KiCad E.D.A. kicad (5.1.4)–1
Id: 1/1