Termostat - fity.club

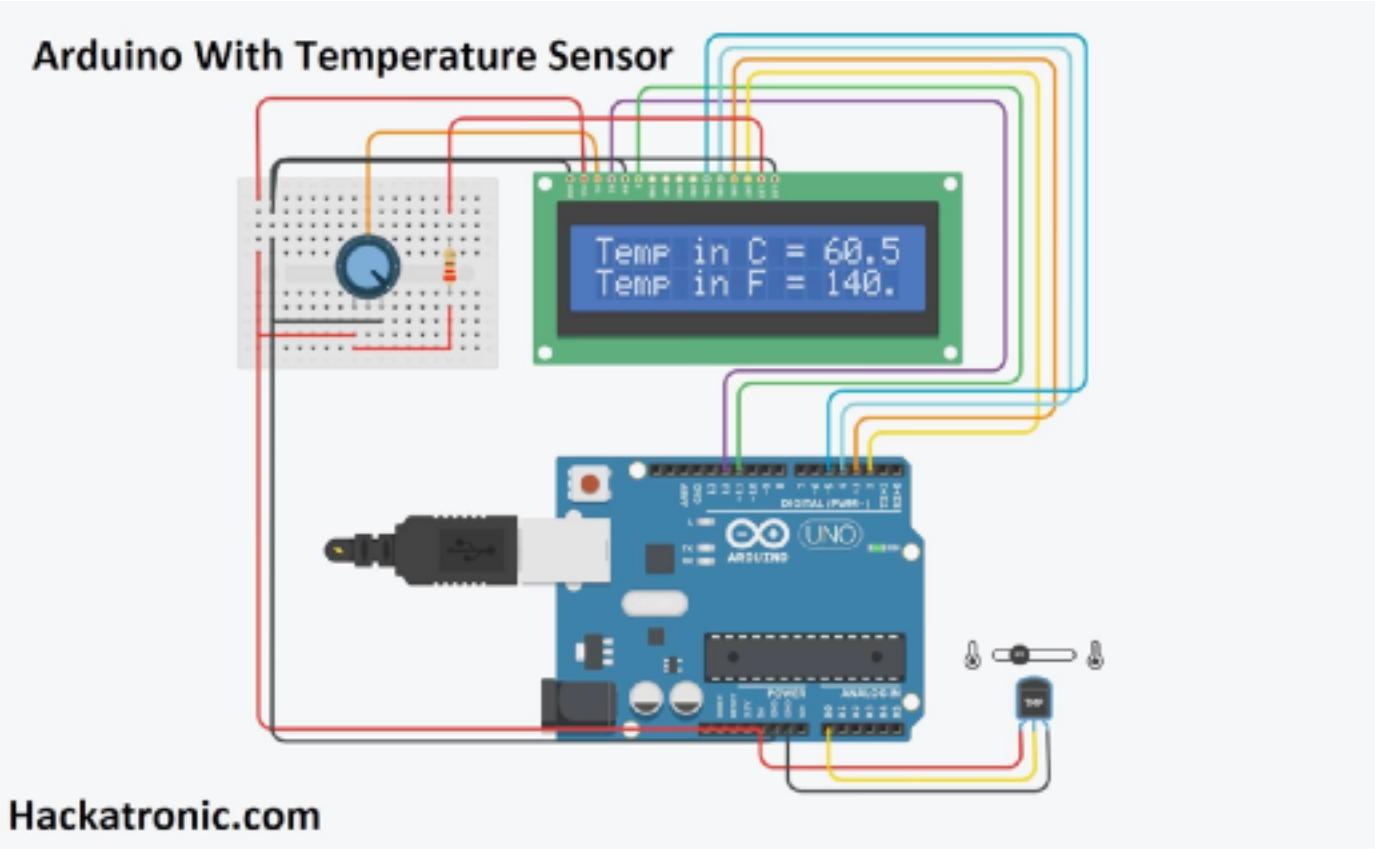

https://www.hackatronic.com/arduino-with-temperature-sensor-interfacing-lcd-and-lm35/