Copyright © 2015 Murphy Company Mechanical Contractors & Engineers. For use only by authorized bidders and contractors in connection with this project. Drawings are property of and all rights reserved by Murphy Company Mechanical Contractors and Engineers.
02/10/2021 WUSM Research Building NRG\116-fab\pipe\dwg\210140-A-UPL2-1D.dwg
04/16/2021 - 7:39am
jmckamely

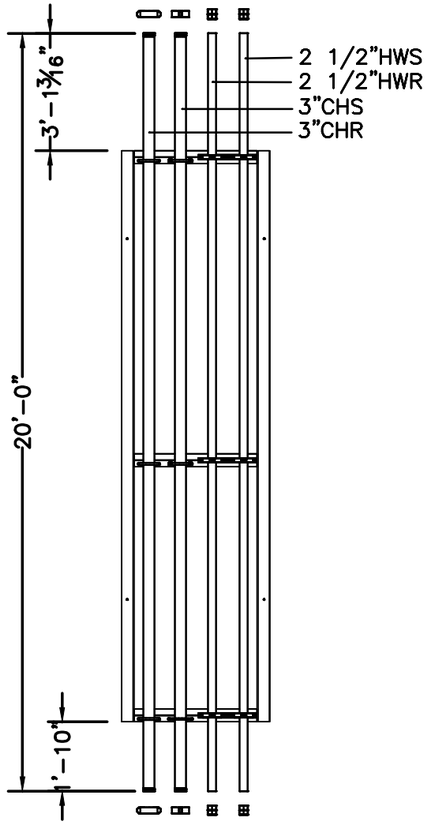

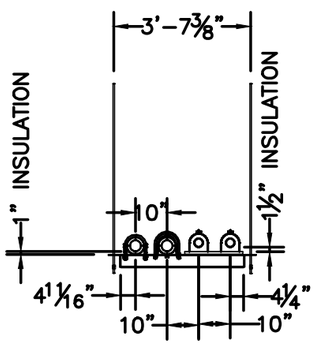

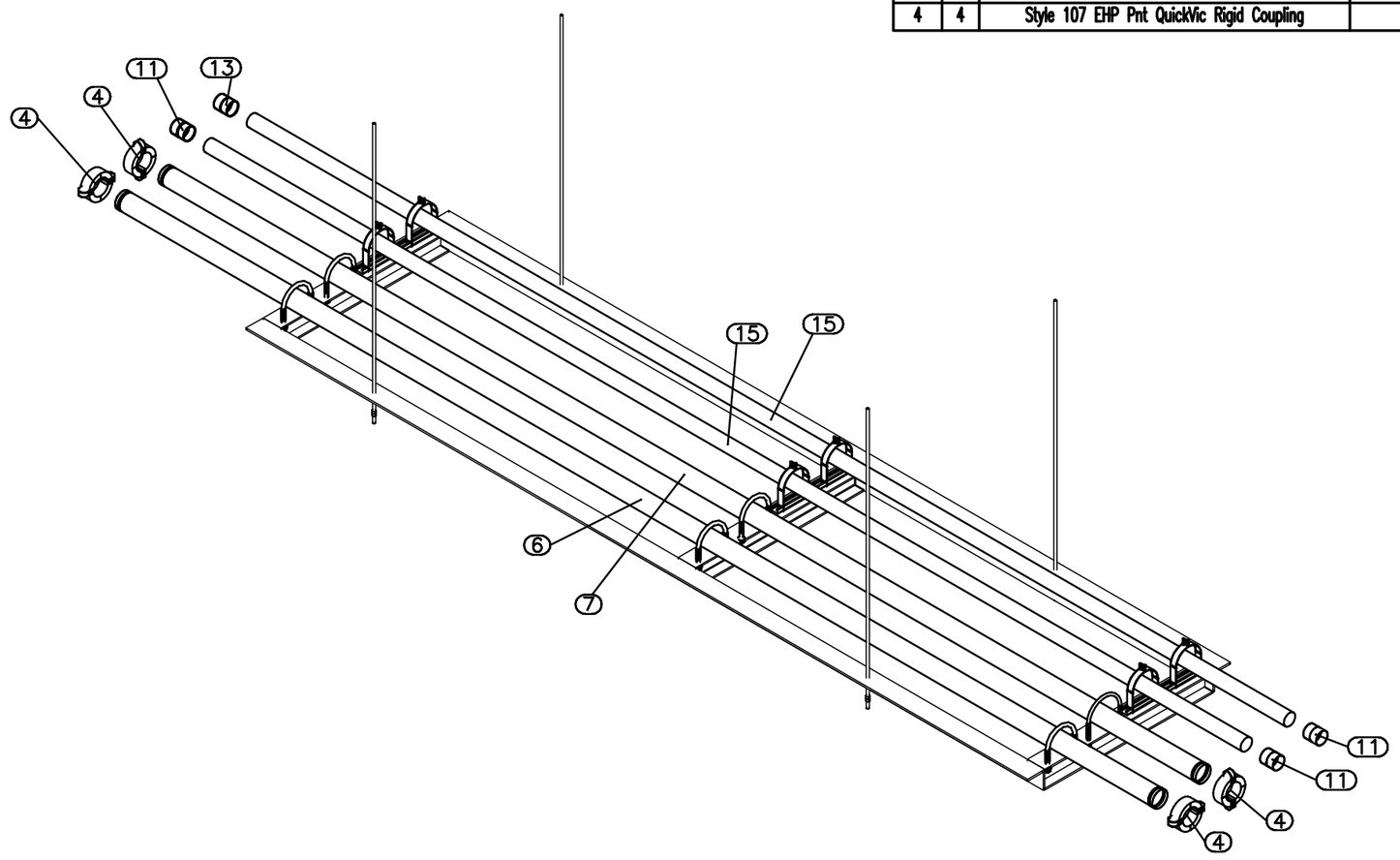

Murphy–PFFS–SPOOL–BOM

Mark	Qty	Description	End 1	End 2	Lft	LDec	Size
15	2	Type K Hard Copper Pipe	Copper Ftg	Copper Ftg	20'-0"	240.000	2-1/2
6	1	Sch 40 SA-53B CS ERW Pipe PE	Grooved End	Grooved End	20'-0"	240.000	3
7	1	Sch 40 SA-53B CS ERW Pipe GRV	Grooved Pipe End	Grooved Pipe End	20'-0"	240.000	3

Murphy–PFFS–Ship Loose BOM

Mark	Qty	Description	End 1	End 2	Lft	LDec	Size
11	3	101 Wrot Coupling without Stop					2-1/2
13	1	Wrot 600 Dimpled Stop Coupling CxC					2-1/2
4	4	Style 107 EHP Pnt QuickVic Rigid Coupling					3

MURPHY
SINCE 1907
CONSTRUCTORS • ENGINEERS MECHANICAL • INDUSTRIAL
1233 N. Price Rd.
St. Louis, MO 63132-2303
314-997-6600 phone
BIMCAD@murphy-stl.com

☐ FLANGE WEIGHT/ORIENTATION
☐ FITTING ORIENTATION
☐ BOLTS/CPLG'S/TH'D TIGHT
☐ SPOOL IDENTIFICATION

QA/QC ACCEPT

SPEC.	ASME	X-RAY	HYDRO TEST	PWHT	COMMENTS	MURPHY WPS#	DRN	CHK	APP
NA	NA	NA	NA	NA					
0									
REV	DATE				DESCRIPTION				

WUSM RESEARCH BUILDING
NRB CUP
PIPE RACKS

SERVICE NAME: CUP LEVEL 02

DRN JMM	3/11/2021
CHK	
APP	
JOB NO. 210140	
REF.DWG.	
DRAWING NO./TRACKING NO.	210140-A-UPL2-1D
QTY.	1
SHT/NO	1 OF 2
REV	0

Copyright © 2015 Murphy Company Mechanical Contractors & Engineers. For use only by authorized bidders and contractors in connection with this project. Drawings are property of and all rights reserved by Murphy Company Mechanical Contractors and Engineers.
210140 WUSM Research Building NRG\116-Rab\pipe\dwg\210140-A-UPL2-1D.dwg
04/16/2021 - 7:39am
jmckamely

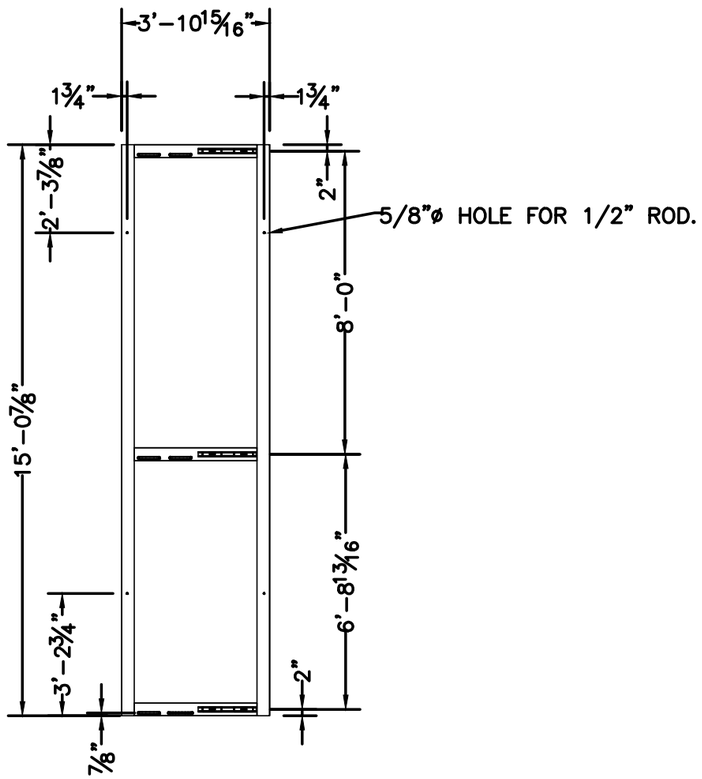

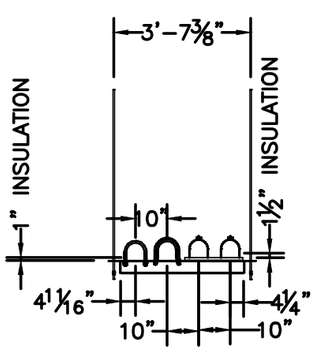

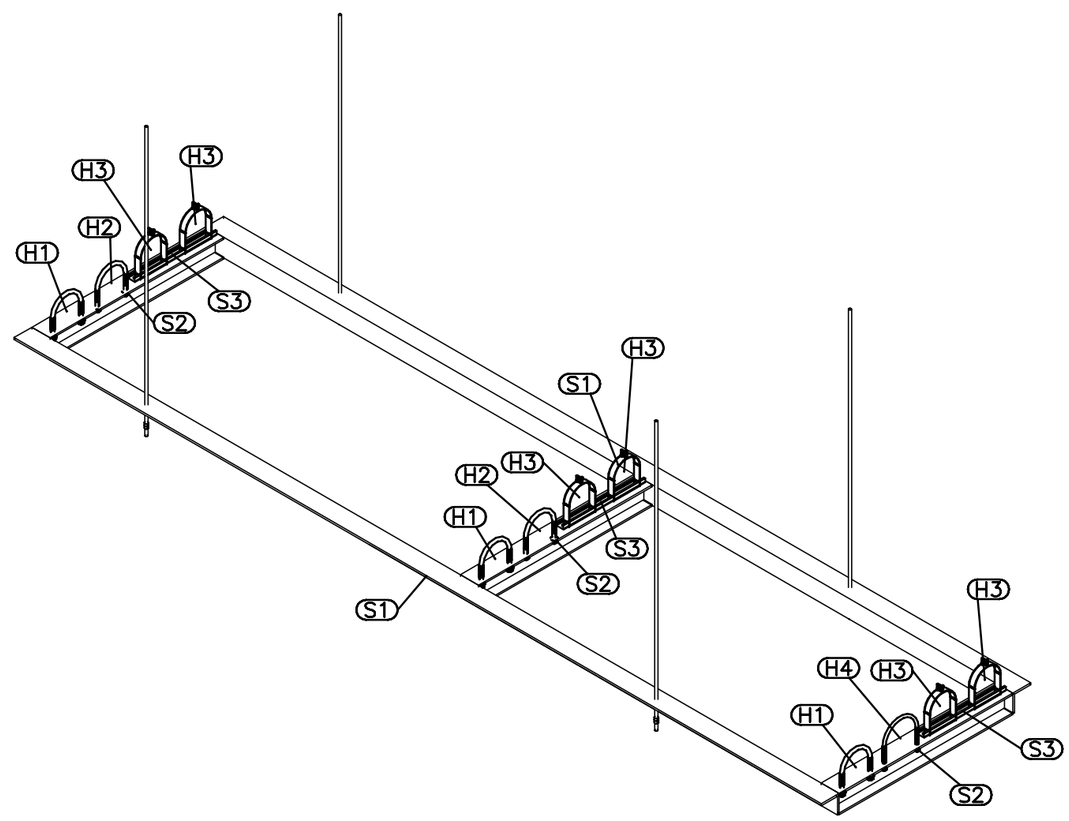

BOM-STEEL

Item No	Order	Description	Qty	Size	Steel L
H1	Fig137	Fig.137 U-Bolt (4)-Nut Black	3	5	
H2	Fig137	Fig.137 U-Bolt (4)-Nut Black	2	5	
H3	929262	Klo-Shure Strut Clamp 1-1/2in Insul Cplg - Fiberglass_CTS	6	2-1/2	
H4	Fig137	Fig.137 U-Bolt (4)-Nut Black	1	6	
S1	L4x4x3/8	ASTM A36 CS Equal Angle	2	L4x4x3/8	180 3/4
S2	W4x13	ASTM A36 CS Wide Flange	3	W4x13	39"
S3	B52 GRN	1FT GREEN 12GA CHANNEL	3	1-5/8x13/16	18 1/2"

MURPHY
SINCE 1907
CONSTRUCTORS • ENGINEERS MECHANICAL • INDUSTRIAL
1233 N. Price Rd.
St. Louis, MO 63132-2303
314-997-6600 phone
BIMCAD@murphy-stl.com

☐ FLANGE WEIGHT/ORIENTATION
☐ FITTING ORIENTATION
☐ BOLTS/CPLG'S/TH'D TIGHT
☐ SPOOL IDENTIFICATION

QA/QC ACCEPT

SPEC.	ASME	X-RAY	HYDRO TEST	PWHT	COMMENTS
NA	NA	NA	NA	NA	MURPHY WPS#
0					
REV	DATE				DESCRIPTION

DRN JMM	3/11/2021		APP
CHK			CHK
APP			DRN
JOB NO. 210140			

WUSM RESEARCH BUILDING
NRB CUP
PIPE RACKS

SERVICE NAME: CUP LEVEL 02

QTY. 1 | SHT/NO 2 OF 2 | REV 0

REF.DWG.

DRAWING NO./TRACKING NO. 210140-A-UPL2-1D