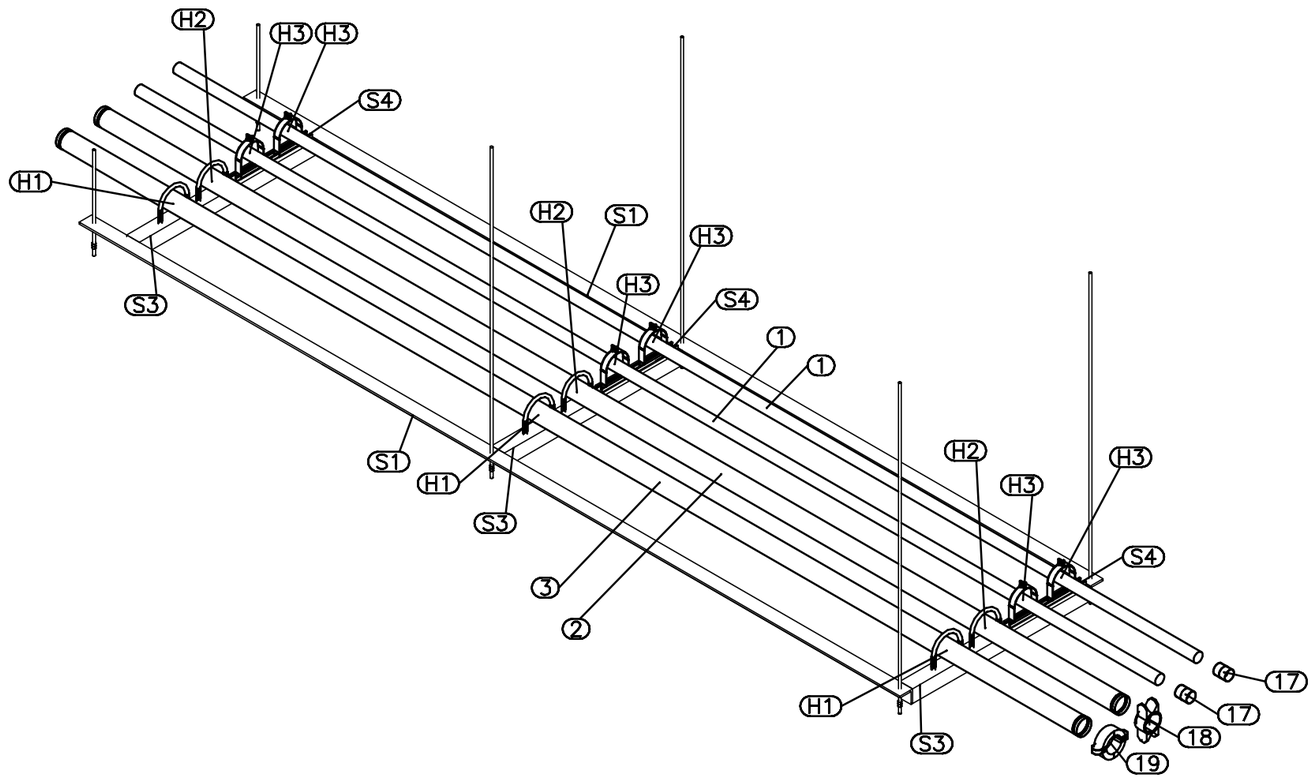

Murphy–PFFS–SPOOL–BOM

Mark	Qty	Description	End 1	End 2	Lft	LDec	Size
1	2	Type K Hard Copper Pipe	Copper Ftg	Copper Ftg	20'–0"	240.000	2
3	1	Sch 40 SA–53B CS ERW Pipe PE	Grooved End	Grooved End	20'–0"	240.000	3
2	1	Sch 40 SA–53B CS ERW Pipe GRV	Grooved Pipe End	Grooved Pipe End	20'–0"	240.000	3

BOM–STEEL

Item No	Order	Description	Qty	Size	Steel L
H1	Fig137	Fig.137 U–Bolt (4)–Nut Black	3	5	
H2	Fig137	Fig.137 U–Bolt (4)–Nut Black	3	5	
H3	929162	Klo–Shure Strut Clamp 1–1/2in Insul Cplg – Fiberglass_CTS	6	1–1/2	
S1	L3x3x3/8	ASTM A36 CS Equal Angle	1	L3x3x3/8	199 1/4"
S1	L3x3x3/8	ASTM A36 CS Equal Angle	1	L3x3x3/8	193"
S3	L3x3x3/8	ASTM A36 CS Equal Angle	3	L3x3x3/8	41 3/4"
S4	B52 GRN	1FT GREEN 12GA CHANNEL	3	1–5/8x13/16	18"

Murphy–PFFS–Ship Loose BOM

Mark	Qty	Description	End 1	End 2	Lft	LDec	Size
17	2	101 Wrot Coupling without Stop					2
19	1	Style 107 EHP Pnt QuickVic Rigid Coupling					3
18	1	Style 107N QuickVic EHP Pnt Rigid Cpl					3

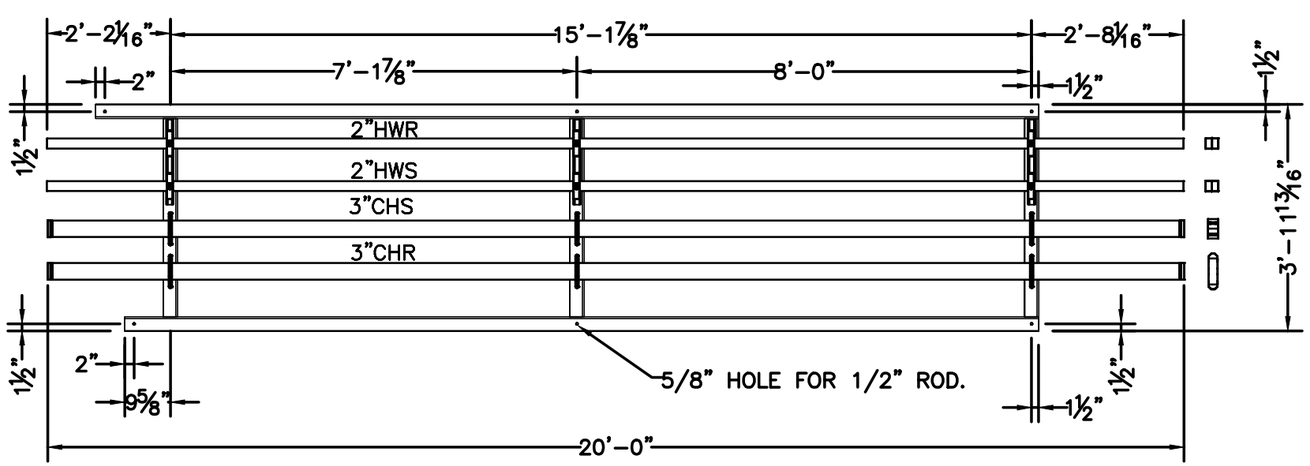

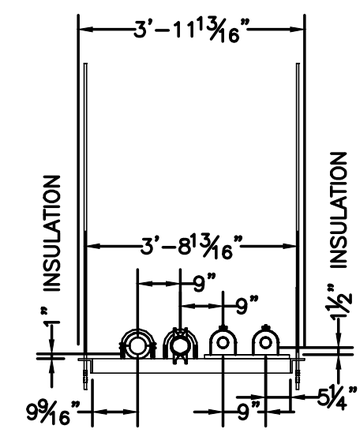

MURPHY
SINCE 1907
CONSTRUCTORS • ENGINEERS MECHANICAL • INDUSTRIAL
1233 N. Price Rd.
St. Louis, MO 63132–2303
314–997–6600 phone
BIMCAD@murphy–stl.com

☐ FLANGE WEIGHT/ORIENTATION
☐ FITTING ORIENTATION
☐ BOLTS/CPLG'S/TH'D TIGHT
☐ SPOOL IDENTIFICATION

QA/QC ACCEPT

REV	DATE	DESCRIPTION	DRN	CHK	APP	MURPHY WPS#	COMMENTS	PWHT	HYDRO TEST	X–RAY	ASME	SPEC.
0						NA		NA	NA	NA	NA	NA

WUSM RESEARCH BUILDING
NRB CUP
PIPE RACKS

SERVICE NAME: CUP LEVEL 02

QTY. 1 | SHT/NO 1 OF 1 | REV 0

DRN JMM 4/19/2021
CHK
APP
JOB NO. 210140

REF.DWG.

DRAWING NO./TRACKING NO. 210140–A–UPL2–1K

Copyright © 2015 Murphy Company Mechanical Contractors & Engineers. For use only by authorized bidders and contractors in connection with this project. Drawings are property of and all rights reserved by Murphy Company Mechanical Contractors and Engineers.
G:\210140 WUSM Research Building NRG\16-fab\pipe\dwg\210140-A-UPL2-1K.dwg
04/20/2021 - 8:30am
jmckamely