Copyright © 2015 Murphy Company Mechanical Contractors & Engineers. For use only by authorized bidders and contractors in connection with this project. Drawings are property of and all rights reserved by Murphy Company Mechanical Contractors and Engineers.

J:\210140 WUSM Research Building NRG\16-fab\pipe\dwg\210140-A-UPL2-5.dwg
06/01/2021 - 11:16am
jmckamely

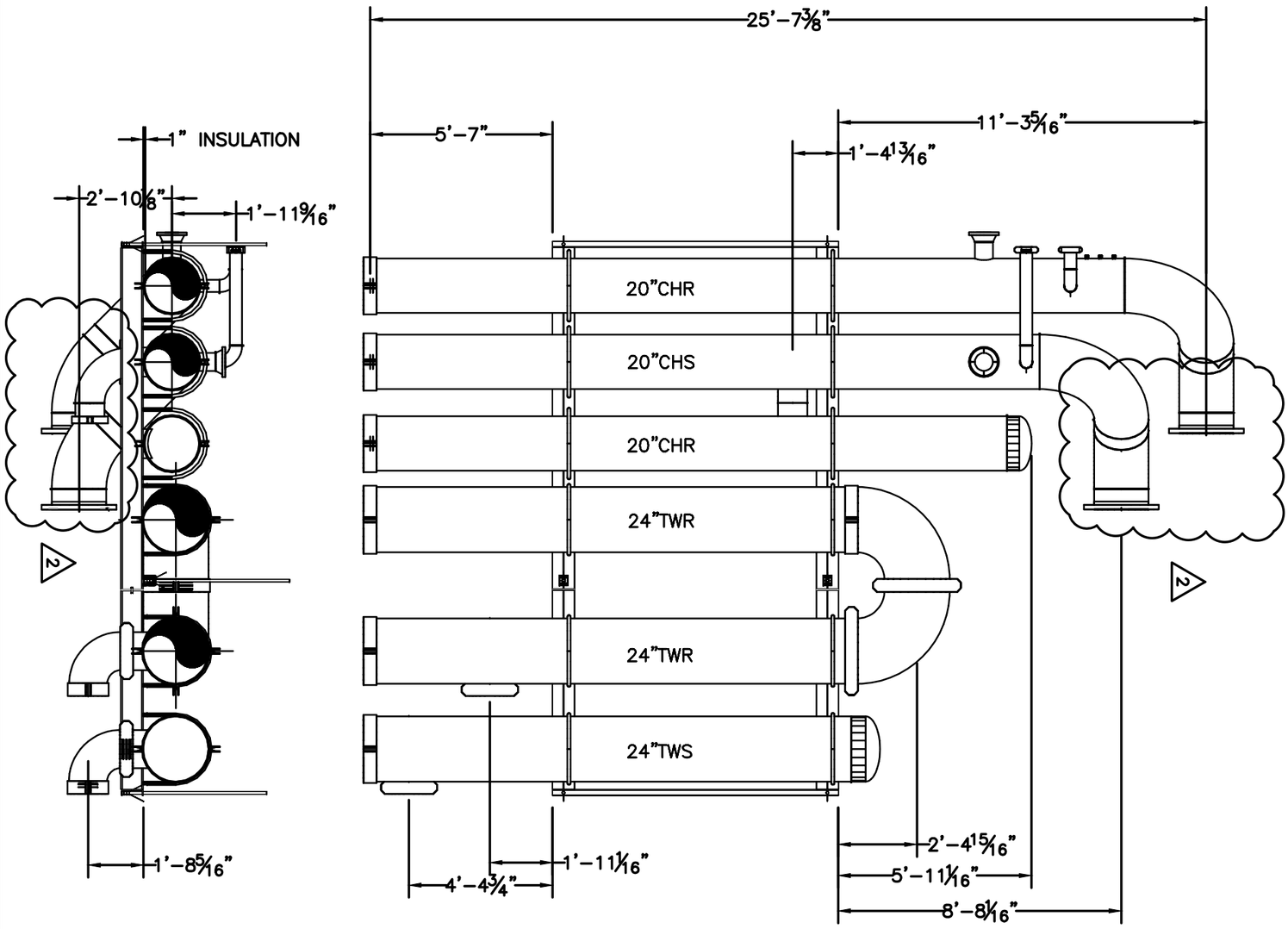

DRN JMM	4/19/2021	WUSM RESEARCH BUILDING NRB CUP PIPE RACKS	QA/QC ACCEPT		FLANGE WEIGHT/ORIENTATION ☐ FITTING ORIENTATION ☐ BOLTS/CPLG'S/TH'D TIGHT ☐ SPOOL IDENTIFICATION ☐	
CHK						
APP						
JOB NO. 210140		SERVICE NAME				
REF.DWG.		CUP LEVEL 02				
DRAWING NO./TRACKING NO.	QTY.	SHT/NO	REV			
210140-A-UPL2-5	1	1 OF 6	2			

SPEC.	ASME	X-RAY	HYDRO TEST	PWHT	COMMENTS
NA	NA	NA	NA	NA	MURPHY WPS#

REV	DATE	DESCRIPTION	DRN	CHK	APP
2	6/1/21	ADDED BFV TO MAINS CHANGED PIPE			

MURPHY
CONSTRUCTORS • ENGINEERS MECHANICAL • INDUSTRIAL
1233 N. Price Rd.
St. Louis, MO 63132-2303
314-997-6600 phone
BIMCAD@murphy-stl.com

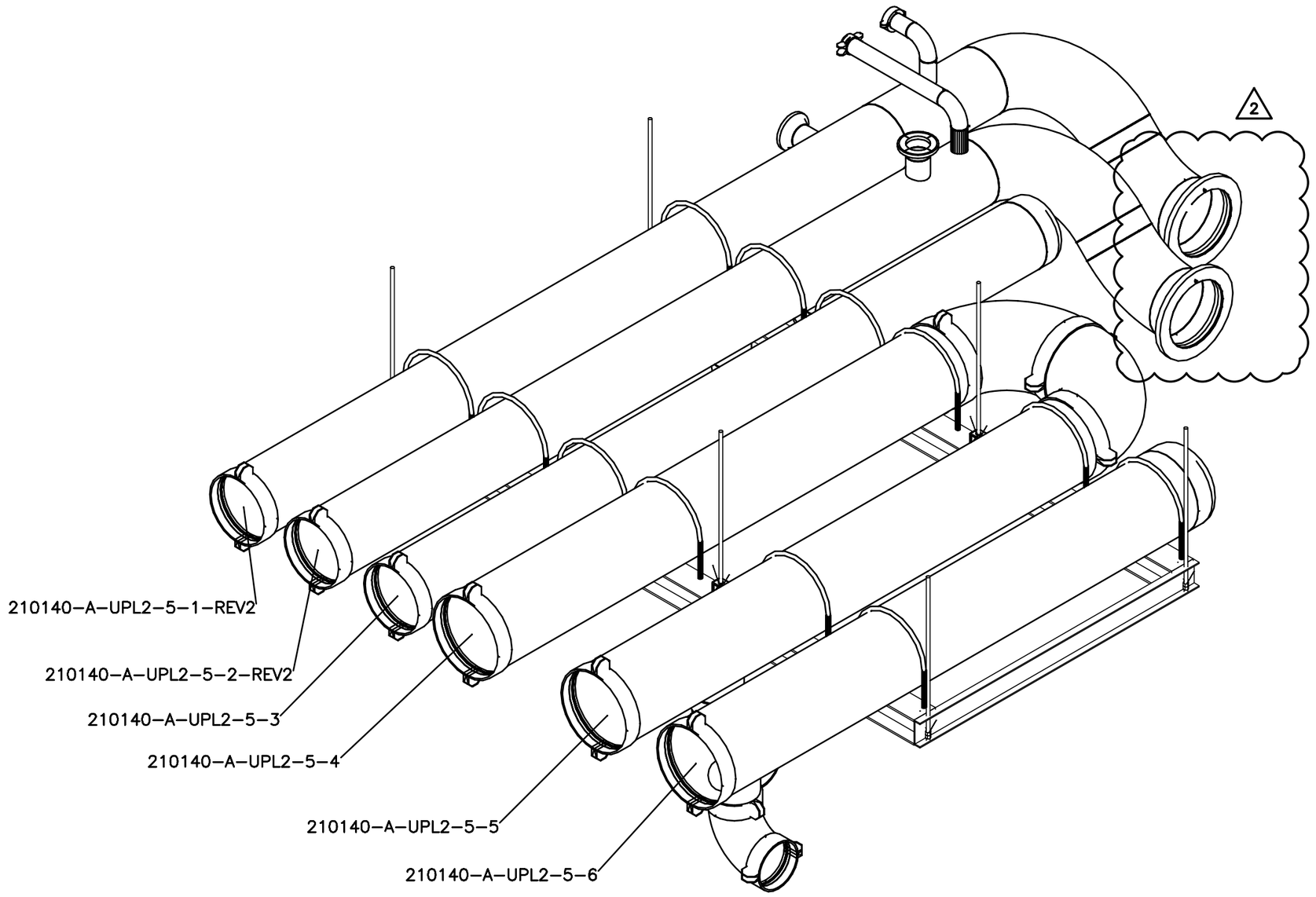

MURPHY
SINCE 1907
CONSTRUCTORS • ENGINEERS MECHANICAL • INDUSTRIAL
1233 N. Price Rd.
St. Louis, MO 63132-2303
314-997-6600 phone
BIMCAD@murphy-stl.com

☐ FLANGE WEIGHT/ORIENTATION
☐ FITTING ORIENTATION
☐ BOLTS/CPLG'S/TH'D TIGHT
☐ SPOOL IDENTIFICATION

QA/QC ACCEPT

SPEC.	ASME	X-RAY	HYDRO TEST	PWHT	COMMENTS
NA	NA	NA	NA	NA	MURPHY WPS#

REV	DATE	DESCRIPTION	DRN	CHK	APP
2	6/1/21	ADDED BFV TO MAINS CHANGED PIPE			

WUSM RESEARCH BUILDING
NRB CUP
PIPE RACKS

SERVICE NAME
CUP LEVEL 02

QTY. 1
SHT/NO 2 OF 6
REV 2

DRN JMM 4/19/2021
CHK
APP
JOB NO. 210140

REF.DWG.

DRAWING NO./TRACKING NO.
210140-A-UPL2-5

Copyright © 2015 Murphy Company Mechanical Contractors & Engineers. For use only by authorized bidders and contractors in connection with this project. Drawings are property of and all rights reserved by Murphy Company Mechanical Contractors and Engineers.
P:\210140 WUSM Research Building NRG\16-fab\pipe\dwg\210140-A-UPL2-5.dwg
06/01/2021 - 11:47am
jmckamely

Copyright © 2015 Murphy Company Mechanical Contractors & Engineers. For use only by authorized bidders and contractors in connection with this project. Drawings are property of and all rights reserved by Murphy Company Mechanical Contractors and Engineers.

P:\210140 WUSM Research Building NRG\16-fab\pipe\dwg\210140-A-UPL2-5.dwg
04/20/2021 - 10:33am
jmckamely

BOM–STEEL

Item No	Order	Description	Qty	Size	Steel L
H1	Fig137	Fig.137 U-Bolt (4)-Nut Black	4	24	
S1	W8x40	ASTM A36 CS Wide Flange	2	W8x40	73"
S2	C8x11.5	ASTM A36 CS C-Channel	1	C8x11.5	105"
S3		ASTM A36 CS Plate 1/4" Thick	2	1/4	8"x8"

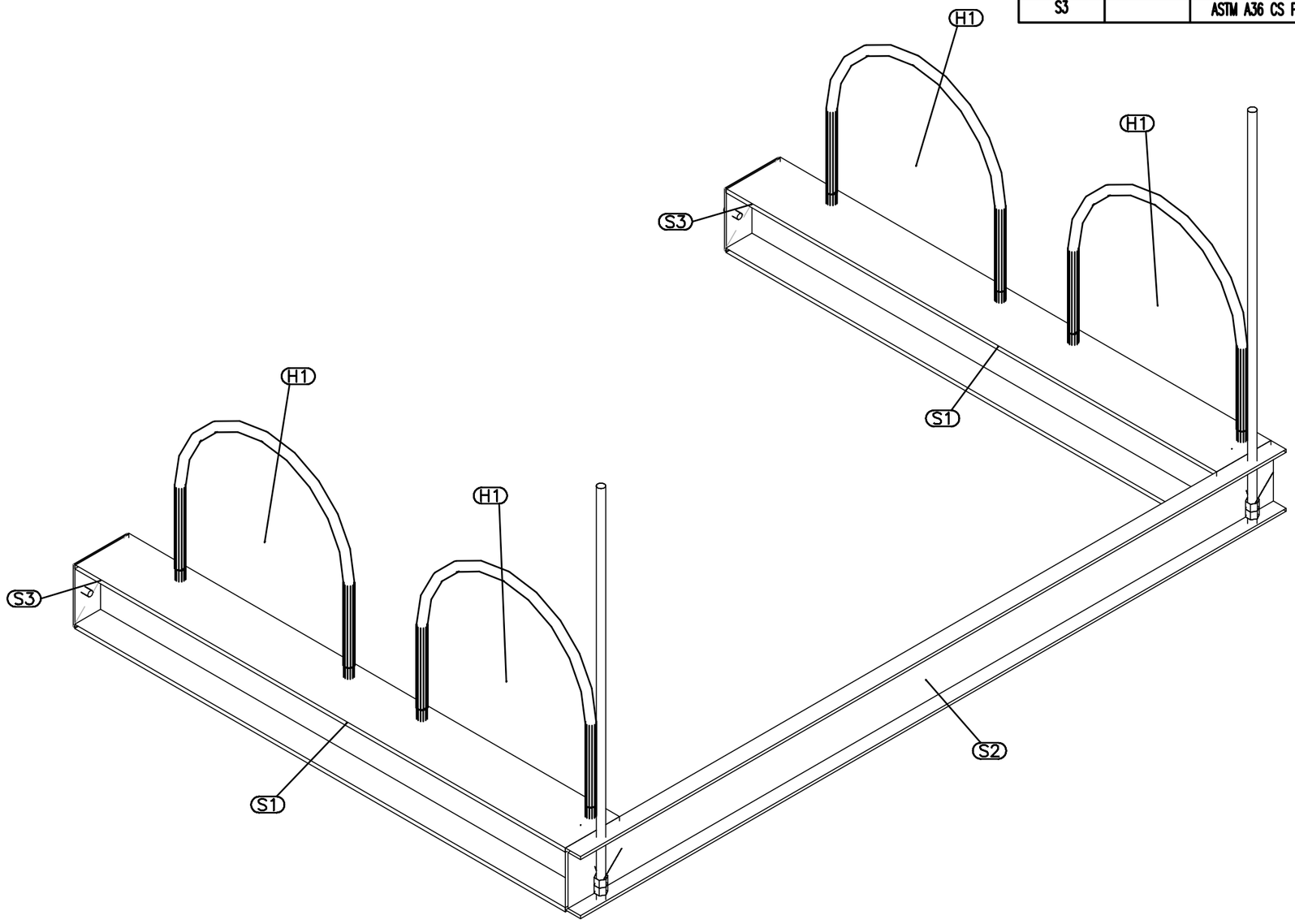

MURPHY
SINCE 1907
CONSTRUCTORS • ENGINEERS MECHANICAL • INDUSTRIAL
1233 N. Price Rd.
St. Louis, MO 63132-2303
314-997-6600 phone
BIMCAD@murphy-stl.com

FLANGE WEIGHT/ORIENTATION
FITTING ORIENTATION
BOLTS/CPLG'S/TH'D TIGHT
SPOOL IDENTIFICATION

QA/QC ACCEPT

SPEC.	ASME	X-RAY	HYDRO TEST	PWHT	COMMENTS
NA	NA	NA	NA	NA	MURPHY WPS#

REV	DATE	DESCRIPTION	DRN	CHK	APP
0					

DRN JMM 4/19/2021
CHK
APP
JOB NO. 210140

WUSM RESEARCH BUILDING
NRB CUP
PIPE RACKS

SERVICE NAME
CUP LEVEL 02

REF.DWG.

DRAWING NO./TRACKING NO.
210140–A–UPL2–5

QTY. 1
SHT/NO 6 OF 6
REV 0

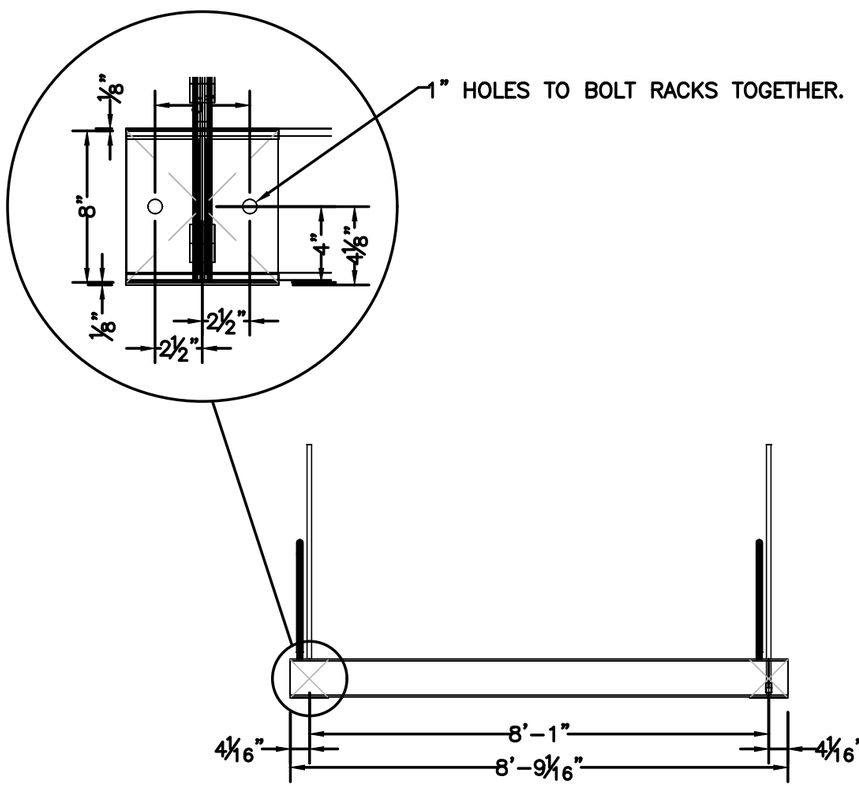

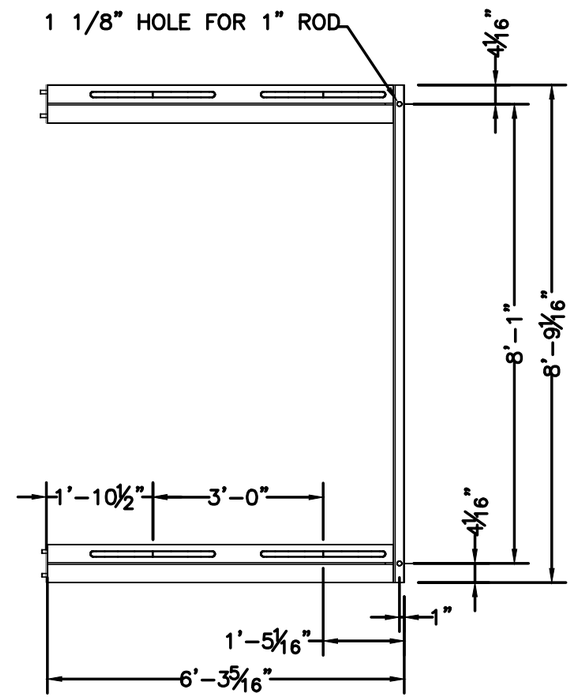

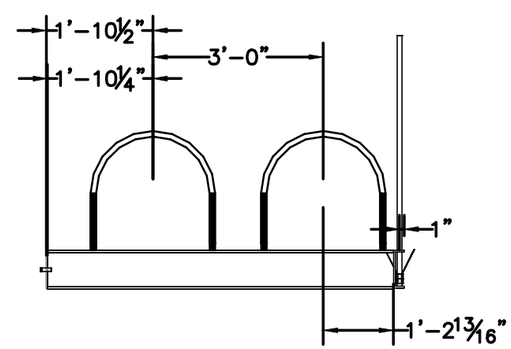

MURPHY
SINCE 1907
CONSTRUCTORS • ENGINEERS MECHANICAL • INDUSTRIAL
1233 N. Price Rd.
St. Louis, MO 63132-2303
314-997-6600 phone
BIMCAD@murphy-stl.com

☐ FLANGE WEIGHT/ORIENTATION
☐ FITTING ORIENTATION
☐ BOLTS/CPLG'S/TH'D TIGHT
☐ SPOOL IDENTIFICATION

QA/QC ACCEPT

SPEC.	ASME	X-RAY	HYDRO TEST	PWHT	COMMENTS
NA	NA	NA	NA	NA	MURPHY WPS#

REV	DATE	DESCRIPTION	DRN	CHK	APP
0					

WUSM RESEARCH BUILDING
NRB CUP
PIPE RACKS

SERVICE NAME: CUP LEVEL 02

QTY. 1 | SHT/NO 5 OF 6 | REV 0

DRN JMM 4/19/2021
CHK
APP
JOB NO. 210140
REF.DWG.
DRAWING NO./TRACKING NO. 210140-A-UPL2-5

Copyright © 2015 Murphy Company Mechanical Contractors & Engineers. For use only by authorized bidders and contractors in connection with this project. Drawings are property of and all rights reserved by Murphy Company Mechanical Contractors and Engineers.
G:\210140 WUSM Research Building NRG\116-lab\pipe\dwg\210140-A-UPL2-5.dwg
04/20/2021 - 10:33am
jmckamely

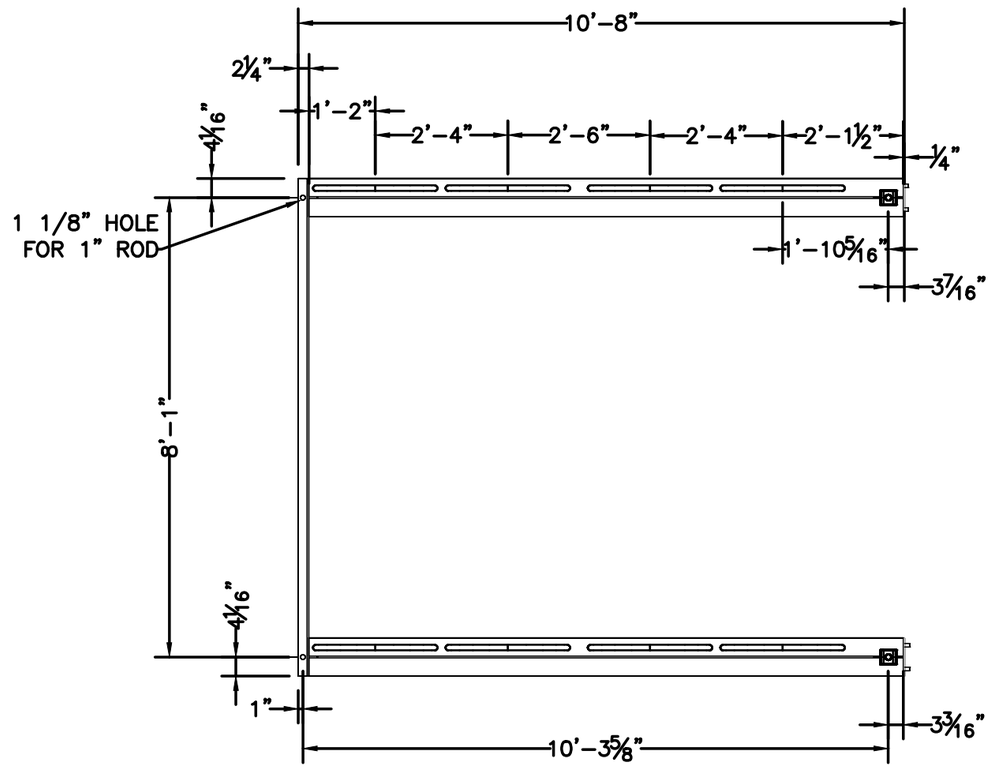

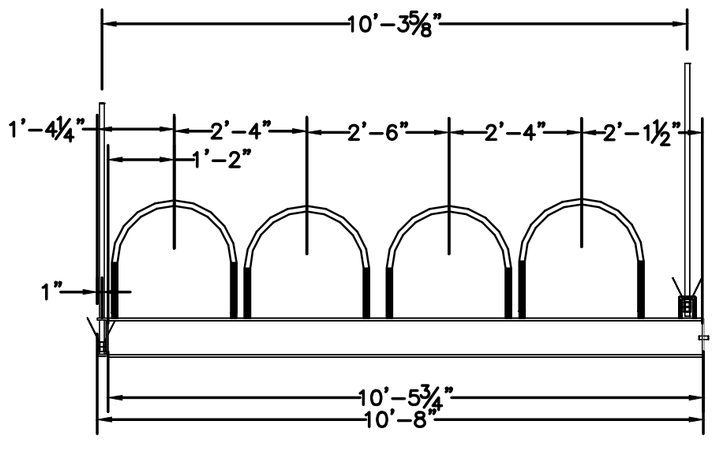

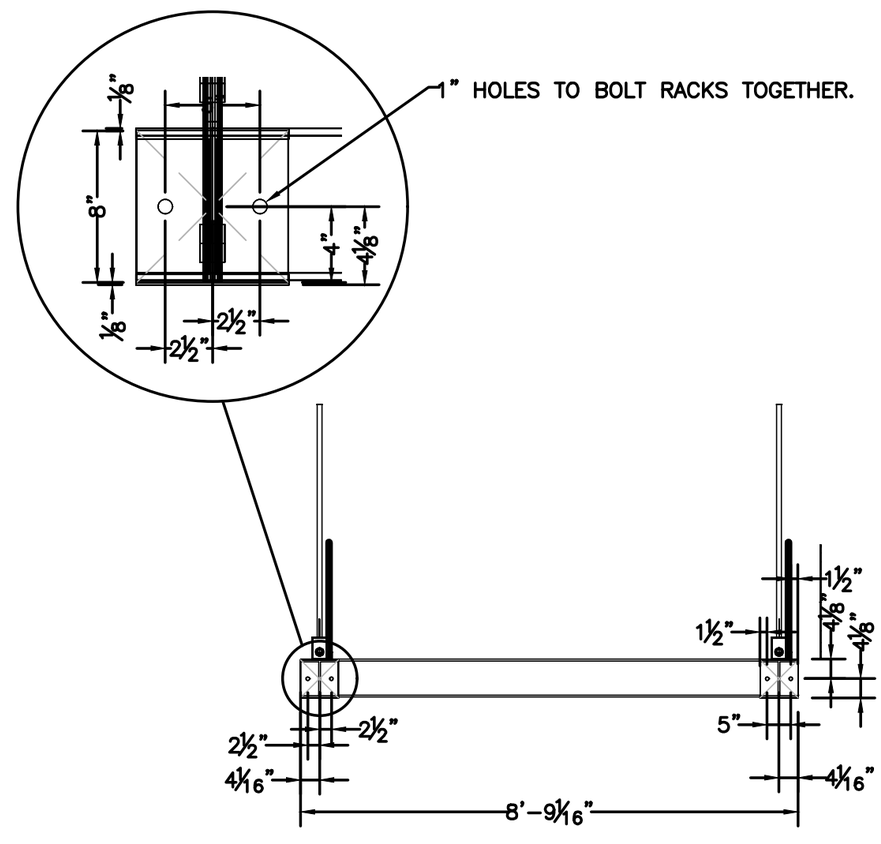

MURPHY
SINCE 1907
CONSTRUCTORS • ENGINEERS MECHANICAL • INDUSTRIAL
1233 N. Price Rd.
St. Louis, MO 63132-2303
314-997-6600 phone
BIMCAD@murphy-stl.com

FLANGE WEIGHT/ORIENTATION ☐
FITTING ORIENTATION ☐
BOLTS/CPLG'S/TH'D TIGHT ☐
SPOOL IDENTIFICATION ☐

QA/QC ACCEPT

SPEC.	ASME	X-RAY	HYDRO TEST	PWHT	COMMENTS
NA	NA	NA	NA	NA	MURPHY WPS#

REV	DATE	DESCRIPTION	DRN	CHK	APP
0					

WUSM RESEARCH BUILDING
NRB CUP
PIPE RACKS

SERVICE NAME: CUP LEVEL 02

QTY. 1 | SHT/NO 3 OF 6 | REV 0

DRN JMM 4/19/2021
CHK
APP
JOB NO. 210140
REF.DWG.
DRAWING NO./TRACKING NO. 210140-A-UPL2-5

Copyright © 2015 Murphy Company Mechanical Contractors & Engineers. For use only by authorized bidders and contractors in connection with this project. Drawings are property of and all rights reserved by Murphy Company Mechanical Contractors and Engineers.
G:\210140 WUSM Research Building NRG\116-fab\pipe\dwg\210140-A-UPL2-5.dwg
04/20/2021 - 10:33am
jmckamely

BOM-STEEL

Item No	Order	Description	Qty	Size	Steel L
H1	Fig137	Fig.137 U-Bolt (4)-Nut Black	4	24	
H2	Fig137	Fig.137 U-Bolt (4)-Nut Black	4	24	
H3	Fig66 No-Bolt - PLN	Fig.66 Weld Beam Attach without Bolt & Nut - BLK	2	1	
S1	W8x40	ASTM A36 CS Wide Flange	2	W8x40	125 1/2"
S2	C8x11.5	ASTM A36 CS C-Channel	1	C8x11.5	105"
S3		ASTM A36 CS Plate 1/4" Thick	2	1/4	8"x8"

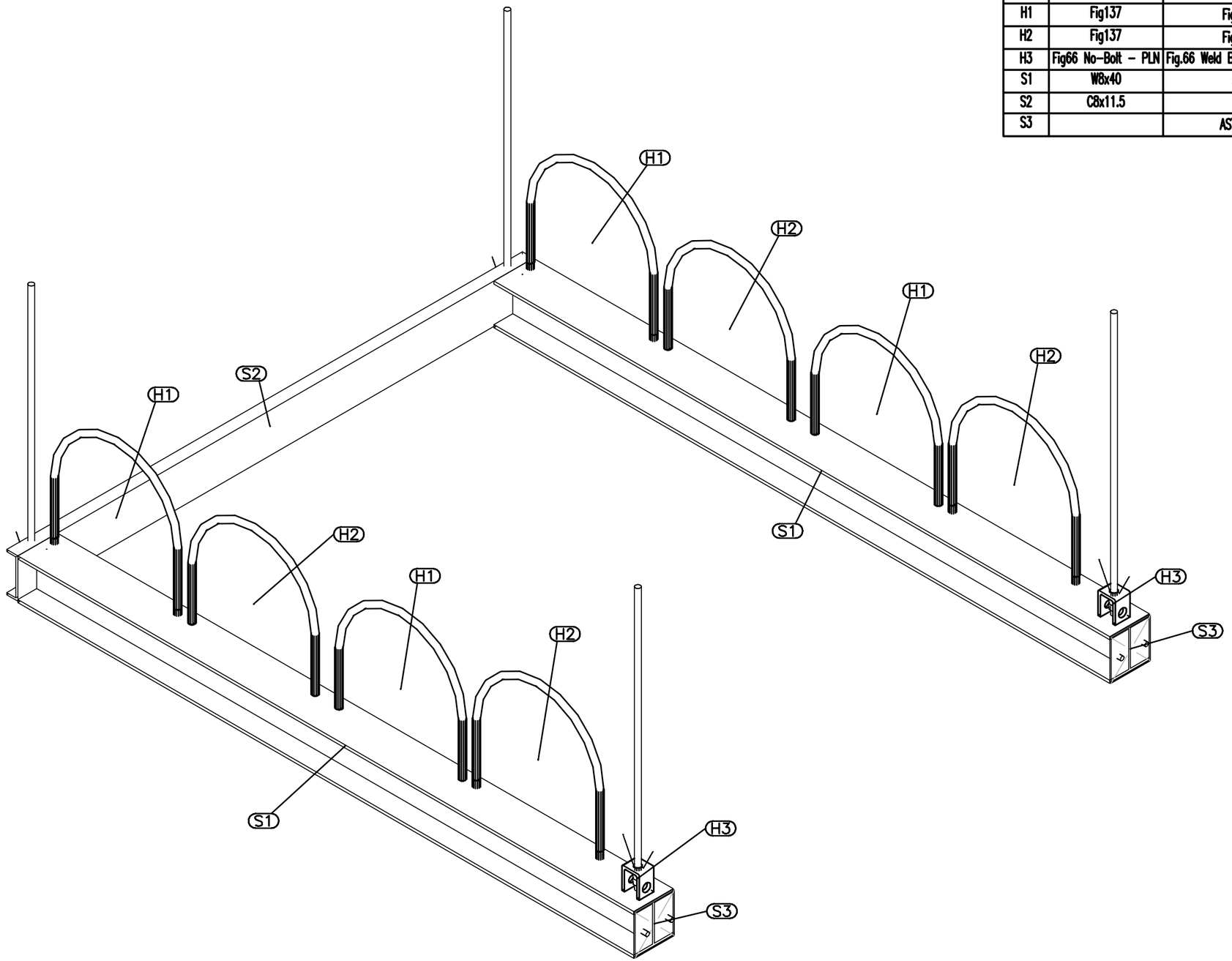

MURPHY SINCE 1907
CONSTRUCTORS • ENGINEERS MECHANICAL • INDUSTRIAL
1233 N. Price Rd.
St. Louis, MO 63132-2303
314-997-6600 phone
BIMCAD@murphy-stl.com

☐ ☐ ☐ ☐
FLANGE WEIGHT/ORIENTATION
FITTING ORIENTATION
BOLTS/CPLG'S/TH'D TIGHT
SPOOL IDENTIFICATION

QA/QC ACCEPT

REV	DATE	DESCRIPTION	DRN	CHK	APP
0					

SPEC.	ASME	X-RAY	HYDRO TEST	PWHT	COMMENTS
NA	NA	NA	NA	NA	MURPHY WPS#

DRN JMM 4/19/2021
CHK
APP
JOB NO. 210140

WUSM RESEARCH BUILDING
NRB CUP
PIPE RACKS

SERVICE NAME
CUP LEVEL 02

REF.DWG.

QTY. 1
SHT/NO 4 OF 6
REV 0

DRAWING NO./TRACKING NO.
210140-A-UPL2-5

Copyright © 2015 Murphy Company Mechanical Contractors & Engineers. For use only by authorized bidders and contractors in connection with this project. Drawings are property of and all rights reserved by Murphy Company Mechanical Contractors and Engineers.

G:\210140 WUSM Research Building NRG\16-fab\pipe\dwg\210140-A-UPL2-5.dwg
04/20/2021 - 10:33am
jmckamely

Copyright © 2015 Murphy Company Mechanical Contractors & Engineers. For use only by authorized bidders and contractors in connection with this project. Drawings are property of and all rights reserved by Murphy Company Mechanical Contractors and Engineers.
K:\210140-WUSM Research Building NRG\16-fab\piping\dwg\210140-A-UPL2-5-1.dwg
06/01/2021 - 11:25am
jmckamely

Murphy–PFFS–SPOOL–BOM

Mark	Qty	Description	End 1	End 2	Lft	LDec	Size
10	1	Sch 40 SA-53B CS ERW Pipe Saddle			7 9/16"	7.563	20x4
3	1	Sch 40 SA-53B CS ERW Pipe Saddle			6"	6.000	20x6
~~1~~	~~1~~	~~150lb RF Sch 40 Bore SA105 CS WN Flg~~					~~6~~
17	1	150lb RF SA105 CS Slip-On FLG					20
~~4~~	~~1~~	~~Style 107 EHP Pnt QuickVic Rigid Coupling~~					~~4~~
13	1	Style W07 Rigid Coupling					20
7	1	Std Wt SA234 WPB CS BW LR 90 Deg Ell					4
8	1	Std Wt SA234 WPB CS BW LR 90 Deg Ell					20
15	1	Std Wt SA234 WPB CS BW 45 Deg Ell					20
18	3	3000# FS Thread-O-Let			1 1/16"	1.063	3/4x20
5	1	Sch 40 SA-53B CS ERW Pipe PE	Grooved End	BEV	7"	7.000	4
11	1	Std Wt SA-53B CS ERW Pipe PE	BEV	BEV	3'-1 1/8"	37.125	20
~~14~~	~~1~~	~~Std Wt SA-53B CS ERW Pipe PE~~	~~BEV~~	~~BEV~~	~~5 9/16"~~	~~5.532~~	~~20~~
16	1	Std Wt SA-53B CS ERW Pipe PE	BEV	BEV	6 15/16"	6.944	20
~~12~~	~~1~~	~~Std Wt SA-53B CS ERW Pipe PE~~	~~BEV~~	~~Grooved End~~	~~20'-0"~~	~~240.000~~	~~20~~

MURPHY SINCE 1907
CONSTRUCTORS • ENGINEERS MECHANICAL • INDUSTRIAL
1233 N. Price Rd.
St. Louis, MO 63132-2303
314-997-6600 phone
BIMCAD@murphy-stl.com

☐ FLANGE WEIGHT/ORIENTATION
☐ FITTING ORIENTATION
☐ BOLTS/CPLG'S/TH'D TIGHT
☐ SPOOL IDENTIFICATION

QA/QC ACCEPT

REV	DATE	DESCRIPTION	DRN	CHK	APP
2	6/1/21	ADDED BFV TO MAINS CHANGED PIPE			

SPEC.	ASME	X-RAY	HYDRO TEST	PWHT	COMMENTS
NA	NA	NA	NA	NA	MURPHY WPS#

WUSM RESEARCH BUILDING
NRB CUP
PIPE RACKS

SERVICE NAME: UPL2-5 RACK

QTY.	SHT/NO	REV
1	1 OF 1	2

DRAWING NO./TRACKING NO. 210140-A-UPL2-5-1

DRN JMM	4/20/2021
CHK	
APP	
JOB NO.	210140
REF.DWG.	

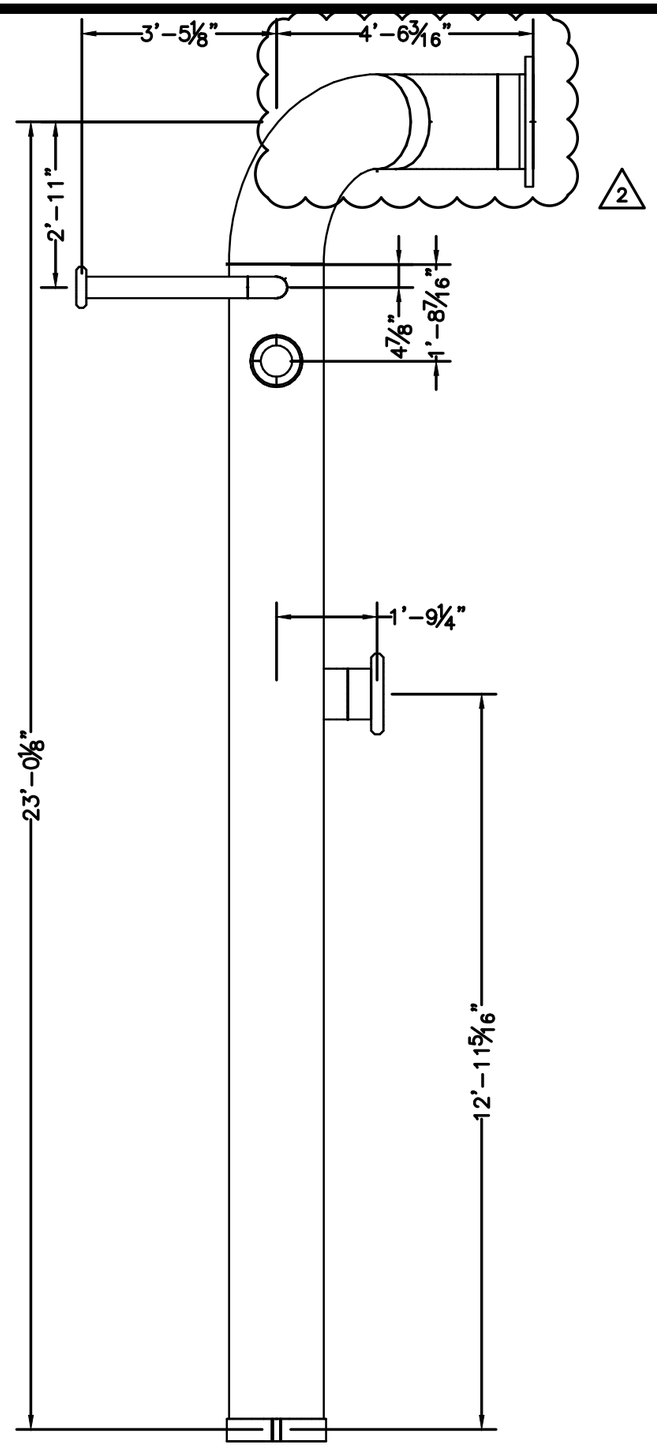

Murphy-PFFS-SPOOL-BOM

	Mark	Qty	Description	End 1	End 2	Lft	LDec	Size
	8	1	Sch 40 SA-53B CS ERW Pipe Saddle			7 9/16"	7.563	20x4
	11	1	Sch 40 SA-53B CS ERW Pipe Saddle			6"	6.000	20x6
	12	2	Sch 40 SA-53B CS ERW Pipe Saddle			5"	5.000	20x10
	21	1	150lb RF Sch 40 Bore SA105 CS WN Flg					6
	9	1	150lb RF Sch 40 Bore SA105 CS WN Flg					10
2	20	1	150lb RF SA105 CS Slip-On FLG					20
	16	1	Style 07 Zero-Flex Cplg					10
	1	1	Style 107N QuickVic EHP Pnt Rigid Cpl					4
	14	1	Style W07 Rigid Coupling					20
	4	1	Std Wt SA234 WPB CS BW LR 90 Deg Ell					4
	13	1	Std Wt SA234 WPB CS BW LR 90 Deg Ell					10
	5	1	Std Wt SA234 WPB CS BW LR 90 Deg Ell					20
	18	1	Std Wt SA234 WPB CS BW 45 Deg Ell					20
	2	1	Sch 40 SA-53B CS ERW Pipe PE	Grooved End	BEV	2'-11"	35.001	4
	17	1	Std Wt SA-53B CS ERW Pipe PE	BEV	BEV	5 9/16"	5.532	20
2	19	1	Std Wt SA-53B CS ERW Pipe PE	BEV	BEV	6 15/16"	6.944	20
	15	1	Sch 40 SA-53B CS ERW Pipe PE	BEV	Grooved End	6 1/8"	6.125	10
	6	1	Std Wt SA-53B CS ERW Pipe PE	BEV	Grooved End	20'-6"	246.000	20

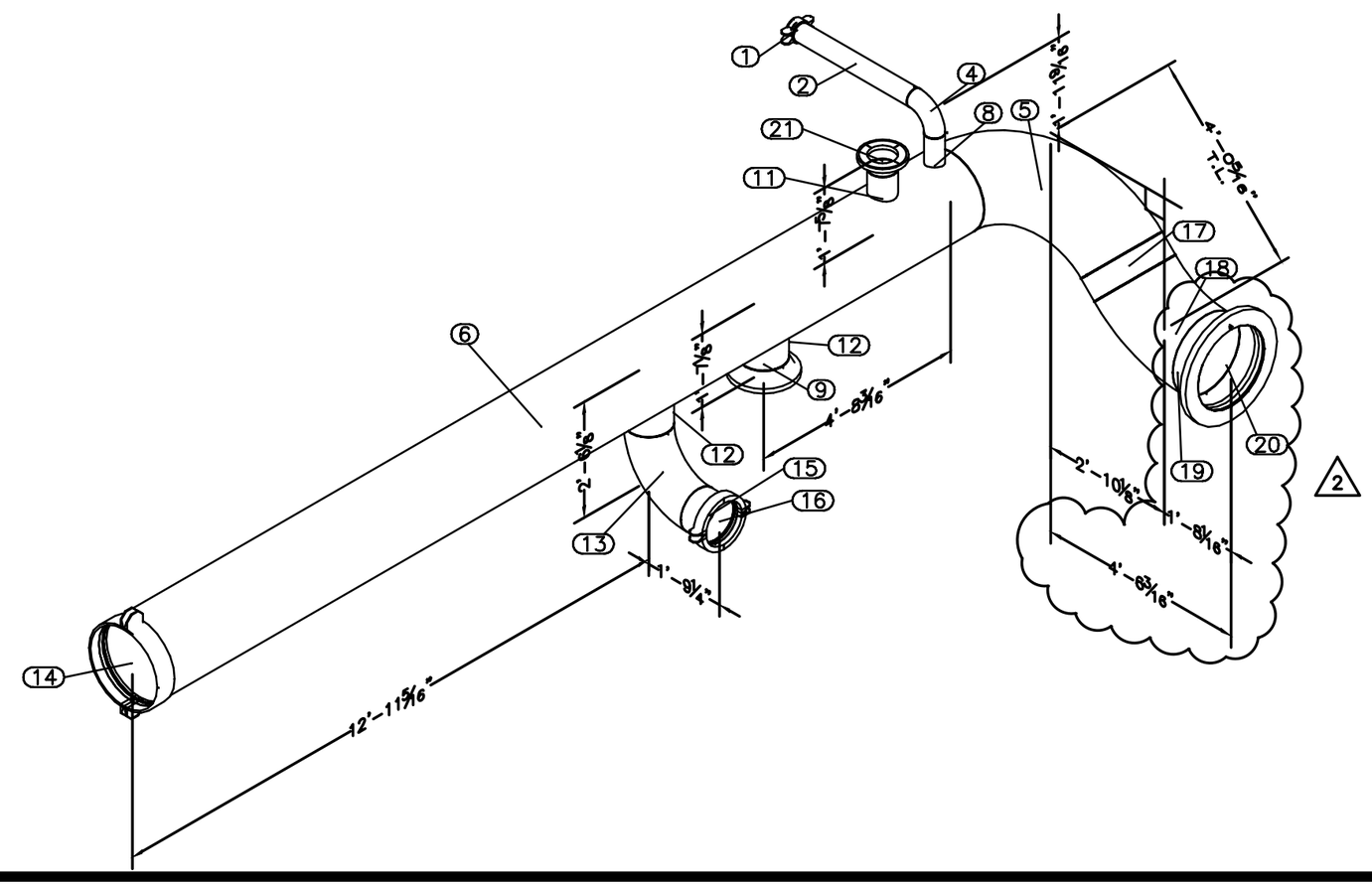

MURPHY
SINCE 1907
CONSTRUCTORS • ENGINEERS MECHANICAL • INDUSTRIAL
1233 N. Price Rd.
St. Louis, MO 63132-2303
314-997-6600 phone
BIMCAD@murphy-stl.com

FLANGE WEIGHT/ORIENTATION
FITTING ORIENTATION
BOLTS/CPLG'S/TH'D TIGHT
SPOOL IDENTIFICATION

QA/QC ACCEPT

REV	DATE	DESCRIPTION	DRN	CHK	APP
2	6/1/21	ADDED BFV TO MAINS CHANGED PIPE			

SPEC.	ASME	X-RAY	HYDRO TEST	PWHT	MURPHY WPS#	COMMENTS
NA	NA	NA	NA	NA		

WUSM RESEARCH BUILDING
NRB CUP
PIPE RACKS

SERVICE NAME: UPL2-5 RACK

QTY. 1 | SHT/NO 1 OF 1 | REV 2

DRN JMM 4/20/2021
CHK
APP
JOB NO. 210140

REF.DWG.

DRAWING NO./TRACKING NO. 210140-A-UPL2-5-2

Copyright © 2015 Murphy Company Mechanical Contractors & Engineers. For use only by authorized bidders and contractors in connection with this project. Drawings are property of and all rights reserved by Murphy Company Mechanical Contractors and Engineers.
P:\210140 WUSM Research Building NRG\16-fab\pipe\dwg\210140-A-UPL2-5-2.dwg
06/01/2021 - 11:36am
jmckamely

Murphy-PFFS-SPOOL-BOM

Mark	Qty	Description	End 1	End 2	Lft	LDec	Size
5	1	Sch 40 SA-53B CS ERW Pipe Saddle			5"	5.000	20x10
4	1	150lb RF Sch 40 Bore SA105 CS WN Flg					10
7	1	Style W07 Rigid Coupling					20
1	1	Std Wt SA234 WPB CS BW Cap					20
6	1	Std Wt SA-53B CS ERW Pipe PE	Grooved End	BEV	19'-6"	234.000	20

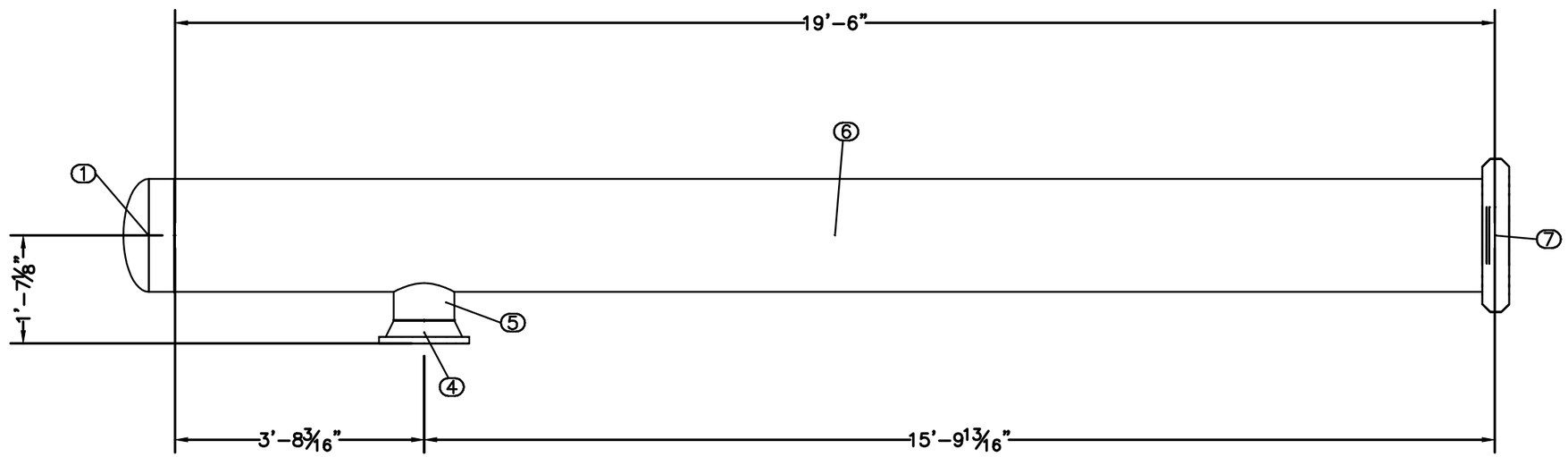

MURPHY
SINCE 1907
CONSTRUCTORS • ENGINEERS MECHANICAL • INDUSTRIAL
1233 N. Price Rd.
St. Louis, MO 63132-2303
314-997-6600 phone
BIMCAD@murphy-stl.com

☐ FLANGE WEIGHT/ORIENTATION
☐ FITTING ORIENTATION
☐ BOLTS/CPLG'S/TH'D TIGHT
☐ SPOOL IDENTIFICATION

QA/QC ACCEPT

SPEC.	ASME	X-RAY	HYDRO TEST	PWHT	COMMENTS
NA	NA	NA	NA	NA	MURPHY WPS#

REV	DATE	DESCRIPTION	DRN	CHK	APP
0					

WUSM RESEARCH BUILDING
NRB CUP
PIPE RACKS

SERVICE NAME
UPL2-5 RACK

REV 0

QTY. 1

SHT/NO 1 OF 1

DRAWING NO./TRACKING NO.
210140-A-UPL2-5-3

REF.DWG.

JOB NO. 210140

DRN JMM	4/20/2021
CHK	
APP	

Copyright © 2015 Murphy Company Mechanical Contractors & Engineers. For use only by authorized bidders and contractors in connection with this project. Drawings are property of and all rights reserved by Murphy Company Mechanical Contractors and Engineers.

P:\210140 WUSM Research Building NRG\16-lab\pipe\dwg\210140-A-UPL2-5-3.dwg
04/20/2021 - 11:03am
jmckamely

Copyright © 2015 Murphy Company Mechanical Contractors & Engineers. For use only by authorized bidders and contractors in connection with this project. Drawings are property of and all rights reserved by Murphy Company Mechanical Contractors and Engineers.
G:\210140 WUSM Research Building NRG\16-fab\pipe\dwg\210140-A-UPL2-5-4.dwg
04/20/2021 - 11:00am
jmckamely

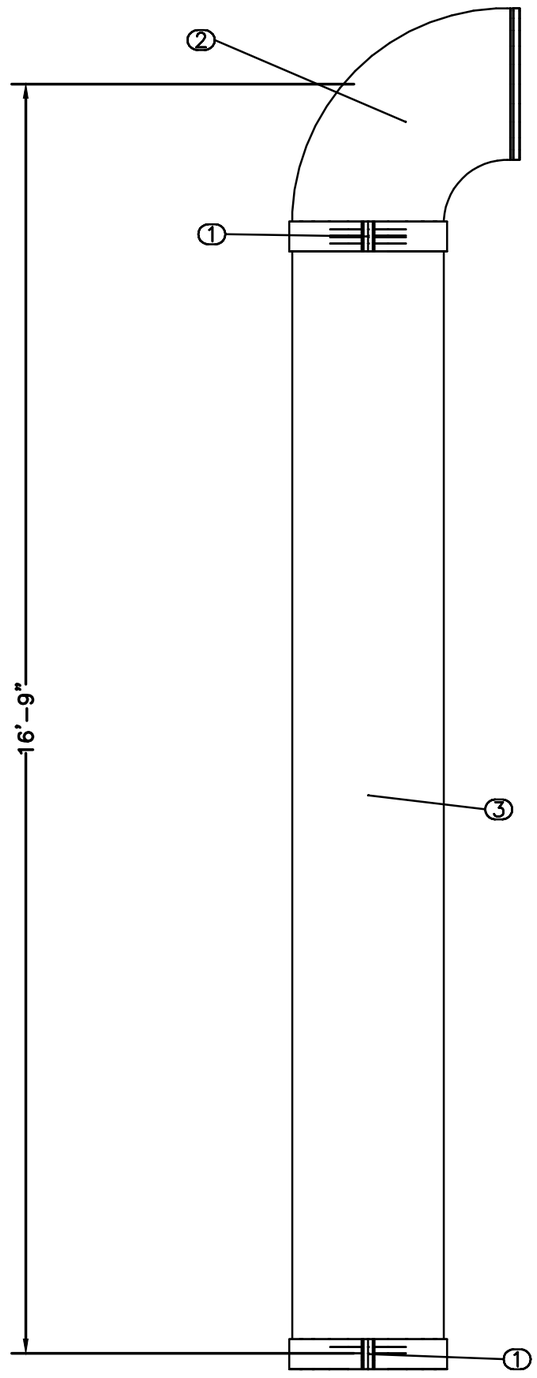

Murphy-PFFS-SPOOL-BOM

Mark	Qty	Description	End 1	End 2	Lft	LDec	Size
1	2	Style W07 Rigid Coupling					24
2	1	No W10 90 Deg Ell					24
3	1	Std Wt SA-53B CS ERW Pipe PE	Grooved End	Grooved End	14'-8 3/4"	176.750	24

MURPHY
SINCE 1907
CONSTRUCTORS • ENGINEERS MECHANICAL • INDUSTRIAL
1233 N. Price Rd.
St. Louis, MO 63132-2303
314-997-6600 phone
BIMCAD@murphy-stl.com

☐ FLANGE WEIGHT/ORIENTATION
☐ FITTING ORIENTATION
☐ BOLTS/CPLG'S/TH'D TIGHT
☐ SPOOL IDENTIFICATION

QA/QC ACCEPT

SPEC.	HYDRO TEST	PWHT	COMMENTS
NA	NA	NA	MURPHY WPS#

REV	ASME	X-RAY	DATE	DESCRIPTION	DRN	CHK	APP
0	NA	NA					

DRN JMM 4/20/2021
CHK
APP
JOB NO. 210140

WUSM RESEARCH BUILDING
NRB CUP
PIPE RACKS

SERVICE NAME
UPL2-5 RACK

REF.DWG.

DRAWING NO./TRACKING NO.
210140-A-UPL2-5-4

QTY. 1

SHT/NO 1 OF 1

REV 0

Copyright © 2015 Murphy Company Mechanical Contractors & Engineers. For use only by authorized bidders and contractors in connection with this project. Drawings are property of and all rights reserved by Murphy Company Mechanical Contractors and Engineers.

G:\2021\210140 WUSM Research Building NRG\116-lab\pipe\dwg\210140-A-UPL2-5-5.dwg
04/20/2021 - 10:59am
jmckamely

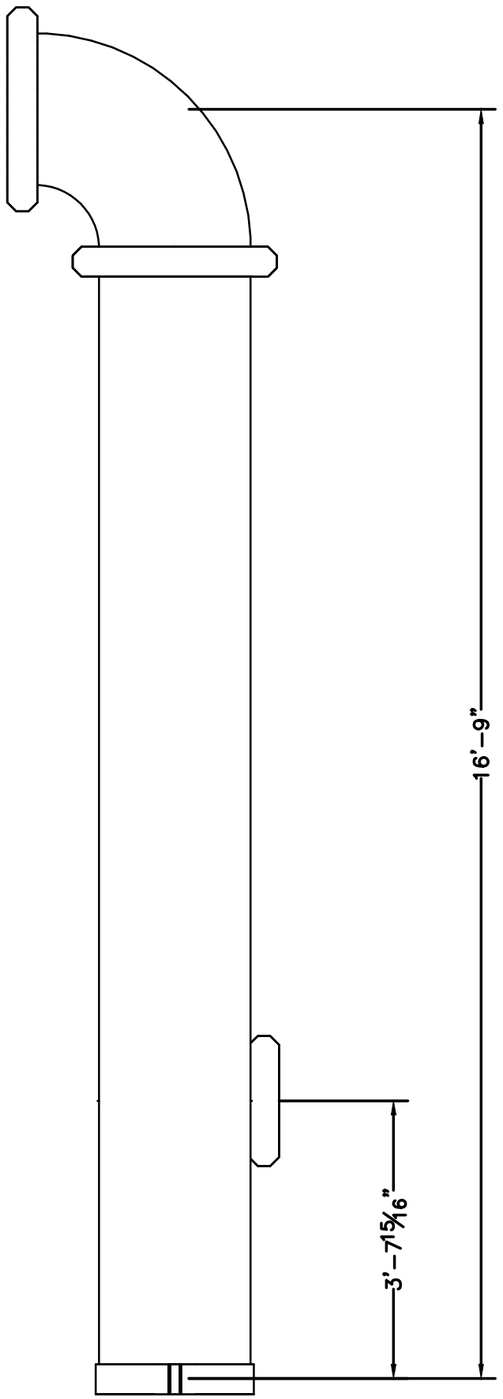

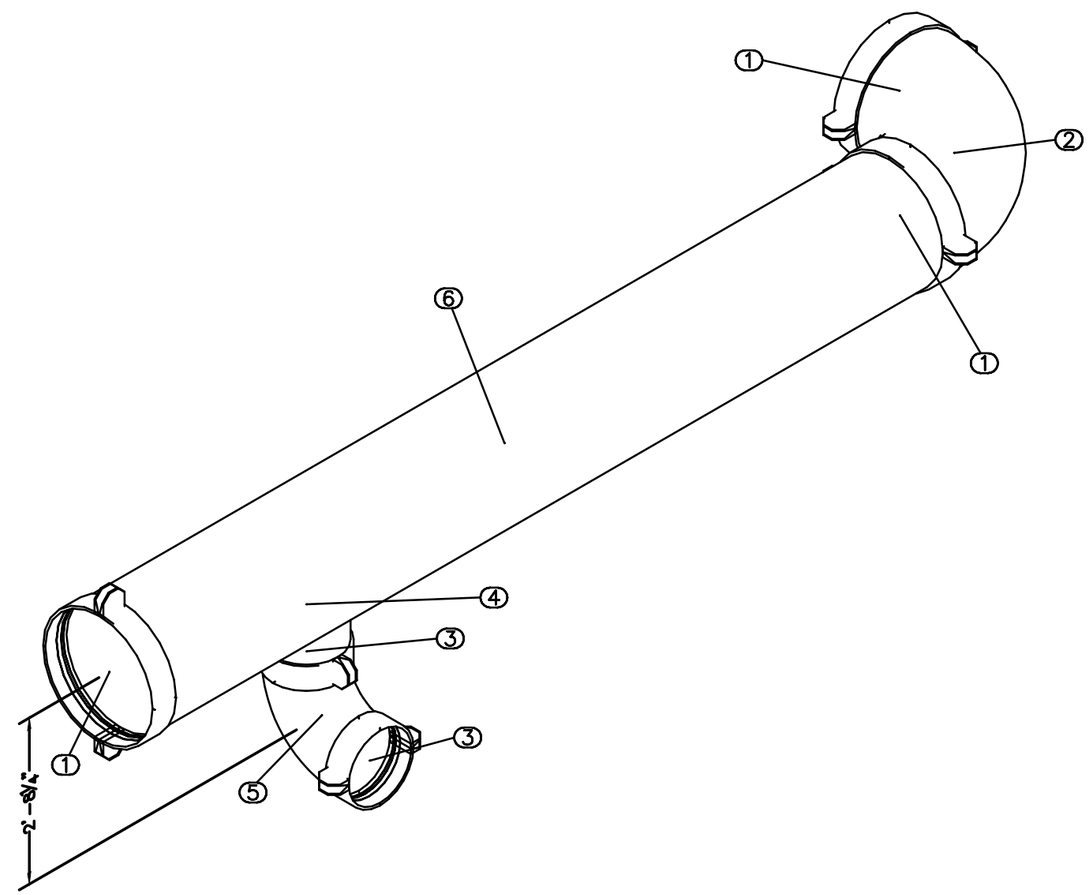

Murphy-PFFS-SPOOL-BOM

Mark	Qty	Description	End 1	End 2	Lft	LDec	Size
4	1	Sch 40 SA-53B CS ERW Pipe Saddle			6"	6.000	24x14
3	2	Style W07 Rigid Coupling					14
1	3	Style W07 Rigid Coupling					24
5	1	No W10 90 Deg Ell					14
2	1	No W10 90 Deg Ell					24
6	1	Std Wt SA-53B CS ERW Pipe PE	Grooved End	Grooved End	14'-8 3/4"	176.750	24

MURPHY
SINCE 1907
CONSTRUCTORS • ENGINEERS MECHANICAL • INDUSTRIAL
1233 N. Price Rd.
St. Louis, MO 63132-2303
314-997-6600 phone
BIMCAD@murphy-stl.com

☐ FLANGE WEIGHT/ORIENTATION
☐ FITTING ORIENTATION
☐ BOLTS/CPLG'S/TH'D TIGHT
☐ SPOOL IDENTIFICATION

QA/QC ACCEPT

REV	DATE	DESCRIPTION	DRN	CHK	APP
0					

SPEC.	ASME	X-RAY	HYDRO TEST	PWHT	MURPHY WPS#	COMMENTS
NA	NA	NA	NA	NA		

DRN JMM	4/20/2021
CHK	
APP	
JOB NO. 210140	
REF.DWG.	
DRAWING NO./TRACKING NO.	210140-A-UPL2-5-5
QTY.	1
SHT/NO	1 OF 1
REV	0
SERVICE NAME	UPL2-5 RACK

WUSM RESEARCH BUILDING
NRB CUP
PIPE RACKS

Copyright © 2015 Murphy Company Mechanical Contractors & Engineers. For use only by authorized bidders and contractors in connection with this project. Drawings are property of and all rights reserved by Murphy Company Mechanical Contractors and Engineers.
C:\210140 WUSM Research Building NRG\16-fab\pipe\dwg\210140-A-UPL2-5-6.dwg
04/20/2021 - 11:27am
jmckamely

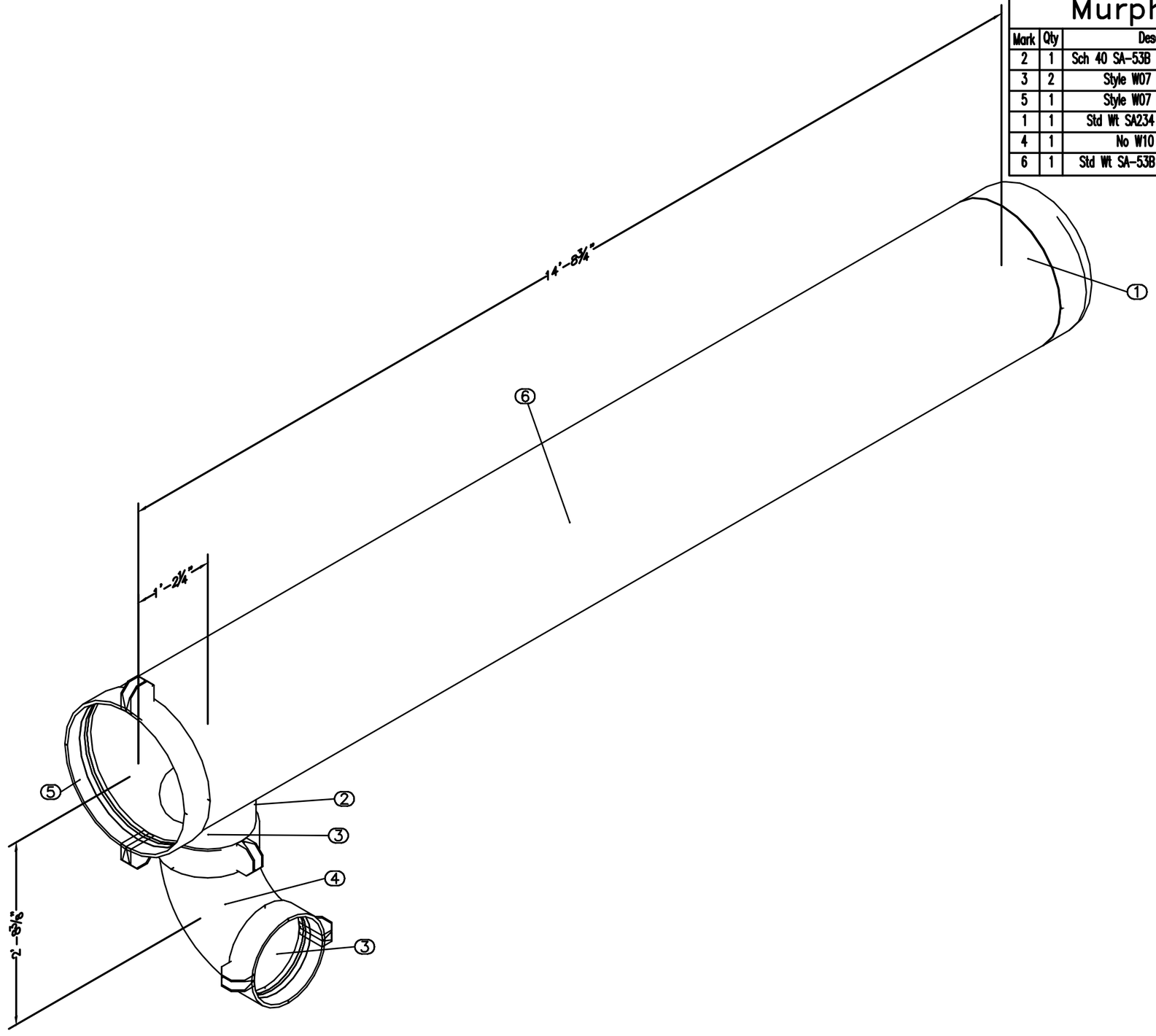

Murphy-PFFS-SPOOL-BOM

Mark	Qty	Description	End 1	End 2	Lft	LDec	Size
2	1	Sch 40 SA-53B CS ERW Pipe Saddle			6"	6.000	24x14
3	2	Style W07 Rigid Coupling					14
5	1	Style W07 Rigid Coupling					24
1	1	Std Wt SA234 WPB CS BW Cap					24
4	1	No W10 90 Deg Ell					14
6	1	Std Wt SA-53B CS ERW Pipe GRV	Grooved Pipe End	BEV	14'-8 3/4"	176.750	24

MURPHY
SINCE 1907
CONSTRUCTORS • ENGINEERS MECHANICAL • INDUSTRIAL
1233 N. Price Rd.
St. Louis, MO 63132-2303
314-997-6600 phone
BIMCAD@murphy-stl.com

☐ FLANGE WEIGHT/ORIENTATION
☐ FITTING ORIENTATION
☐ BOLTS/CPLG'S/TH'D TIGHT
☐ SPOOL IDENTIFICATION

QA/QC ACCEPT

SPEC.	HYDRO TEST	X-RAY	ASME	PWHT	COMMENTS
NA	NA	NA	NA	NA	MURPHY WPS#

REV	DATE	DESCRIPTION	DRN	CHK	APP
0					

DRN JMM	4/20/2021
CHK	
APP	
JOB NO. 210140	
REF.DWG.	
DRAWING NO./TRACKING NO.	210140-A-UPL2-5-6
QTY.	1
SHT/NO	1 OF 1
REV	0

WUSM RESEARCH BUILDING
NRB CUP
PIPE RACKS

SERVICE NAME
UPL2-5 RACK