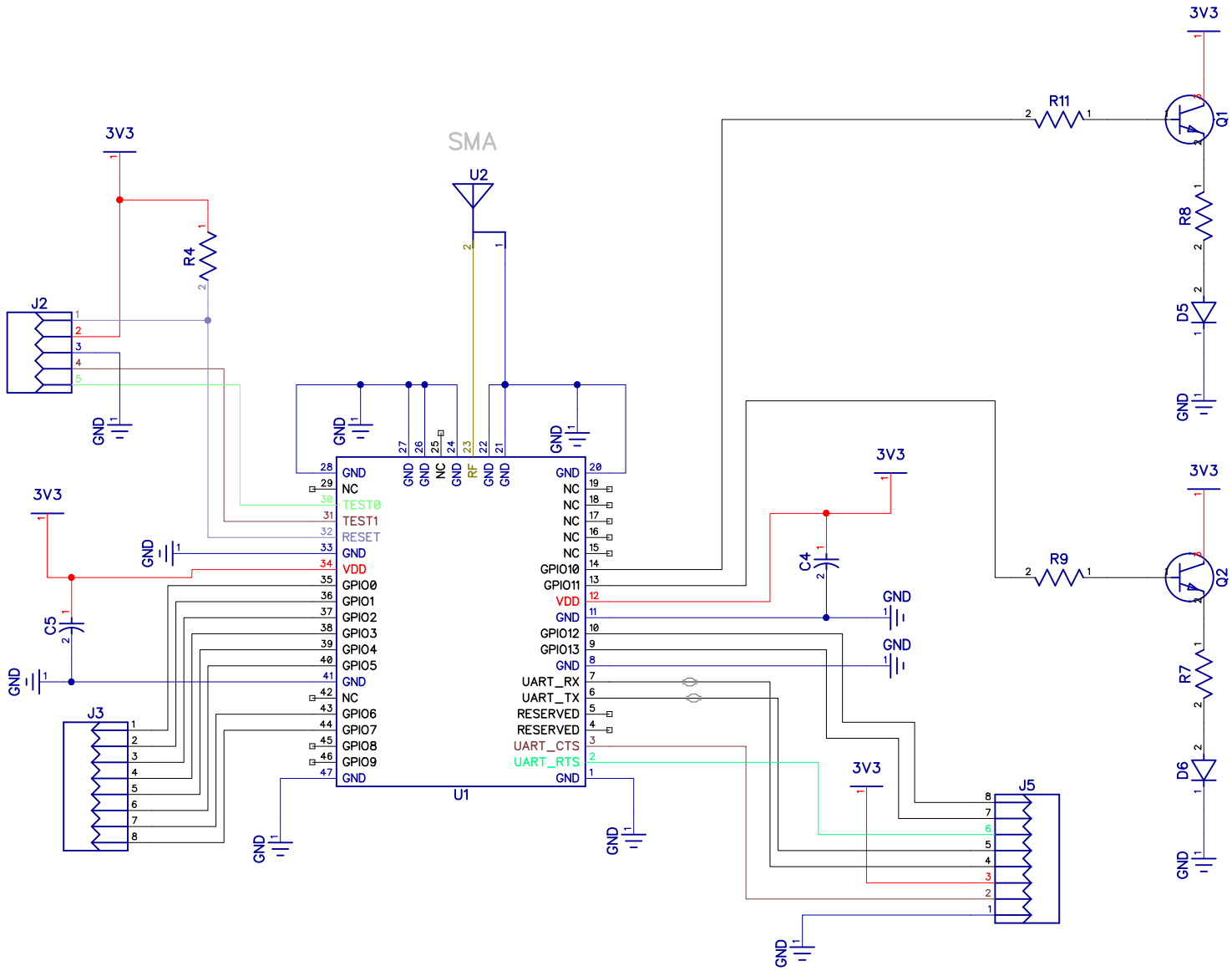


| | | |
|---|---|---|
| Title | | |
| Size | Number | Rev |
| Date: May 2016 | Drawn by | |
| Filename | Sheet | |

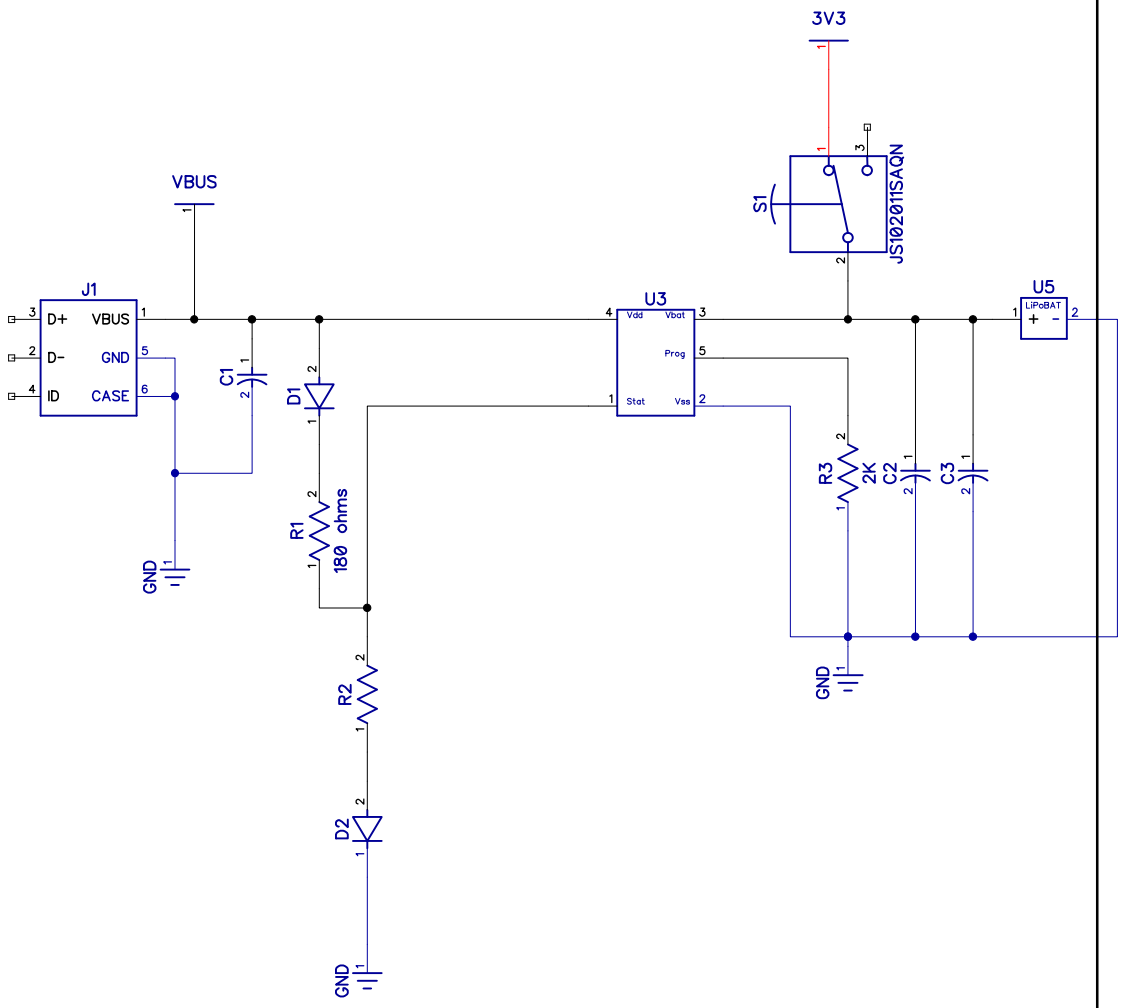


| Title | | |
|---|---|---|
| Size | Number | Rev |
| Date: May 2016 | Drawn by | |
| Filename | Sheet | |