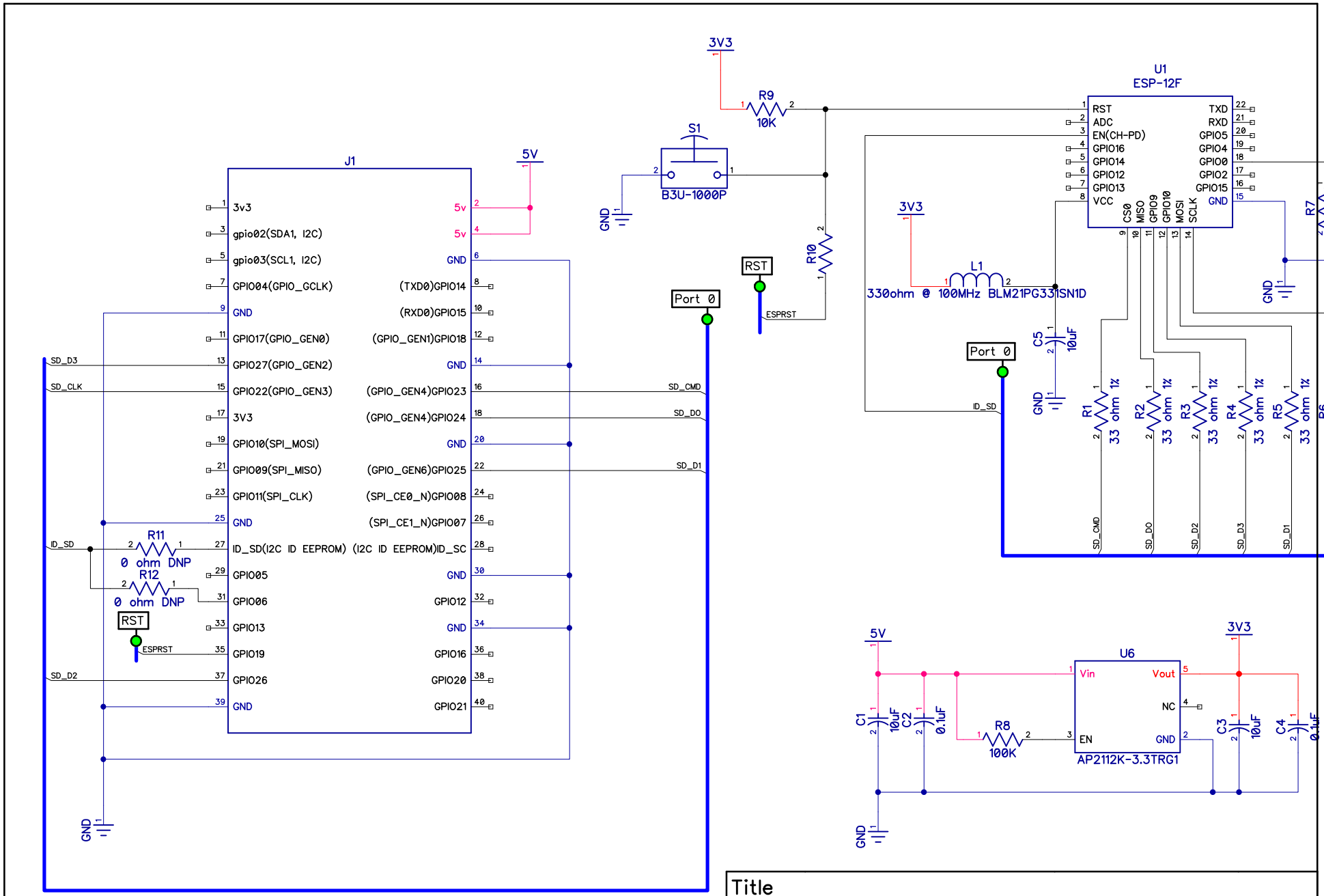

Title		
Size	Number	Rev
Date	Drawn by	
Filename	Sheet	