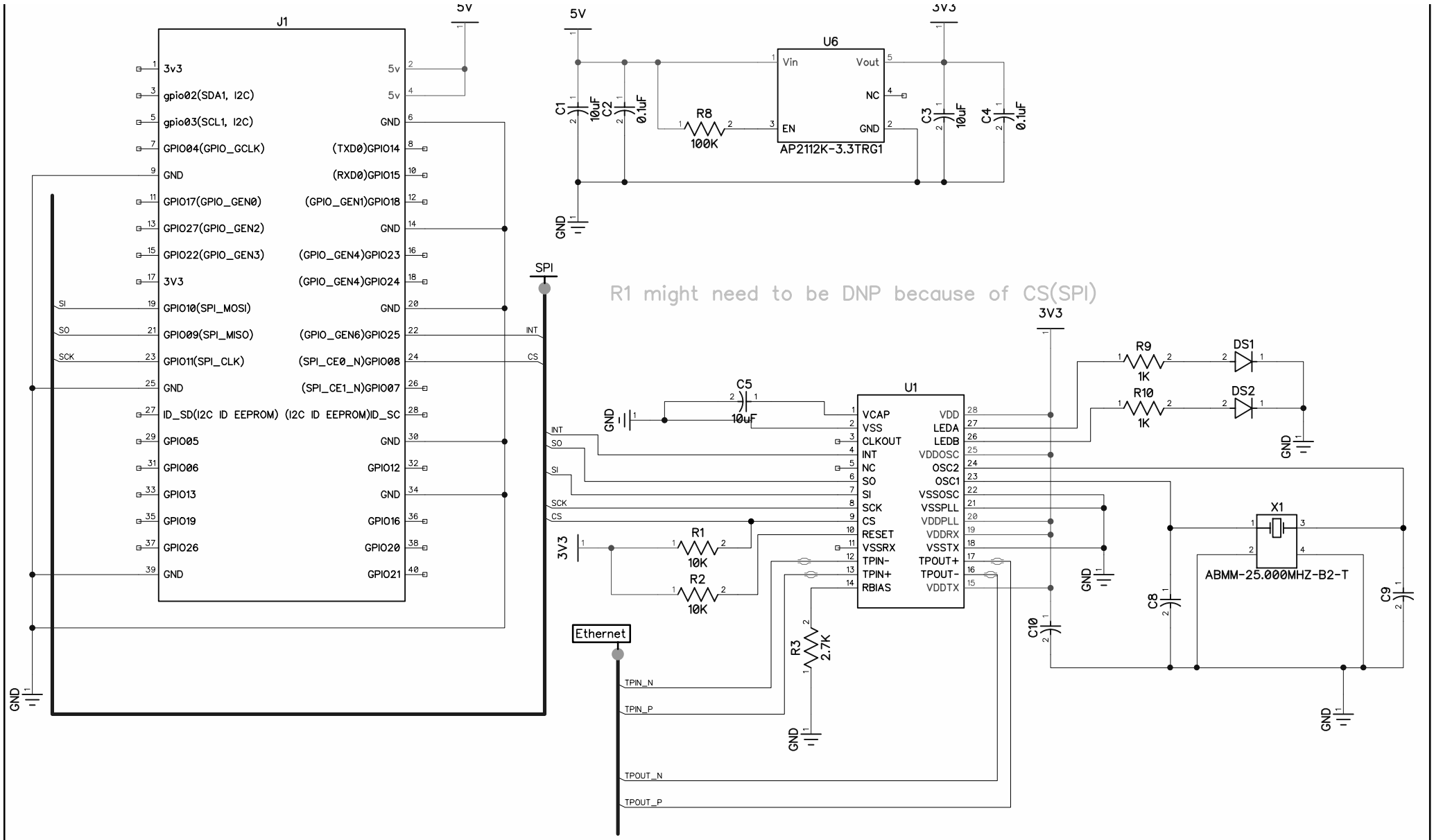
J1
3v3
gpio02(SDA1, I2C)
gpio03(SCL1, I2C)
GPIO04(GPIO_GCLK)
GND
GPIO17(GPIO_GEN0)
GPIO27(GPIO_GEN2)
GPIO22(GPIO_GEN3)
3V3
GPIO10(SPI_MOSI)
GPIO09(SPI_MISO)
GPIO11(SPI_CLK)
GND
ID_SD(I2C ID EEPROM)
GPIO05
GPIO06
GPIO13
GPIO19
GPIO26
GND
5v
5v
GND
(TXD0)GPIO14
(RXD0)GPIO15
(GPIO_GEN1)GPIO18
GND
(GPIO_GEN4)GPIO23
(GPIO_GEN4)GPIO24
GND
(GPIO_GEN6)GPIO25
(SPI_CE0_N)GPIO08
(SPI_CE1_N)GPIO07
(I2C ID EEPROM)ID_SC
GND
GPIO12
GND
GPIO16
GPIO20
GPIO21
SI
SO
SCK
INT
CS
SPI
5V
U6
Vin
Vout
NC
EN
GND
AP2112K-3.3TRG1
C1 10uF
C2 0.1uF
R8 100K
C3 10uF
C4 0.1uF
3V3
R1 might need to be DNP because of CS(SPI)
C5 10uF
U1
VCAP
VSS
CLKOUT
INT
NC
SO
SI
SCK
CS
RESET
VSSRX
TPIN-
TPIN+
RBIAS
VDD
LEDA
LEDB
VDDOSC
OSC2
OSC1
VSSOSC
VSSPLL
VDDPLL
VDDRX
VSSTX
TPOUT+
TPOUT-
VDDTX
R1 10K
R2 10K
R3 2.7K
R9 1K
R10 1K
DS1
DS2
X1
ABMM-25.000MHZ-B2-T
C8
C9
C10
Ethernet
TPIN_N
TPIN_P
TPOUT_N
TPOUT_P

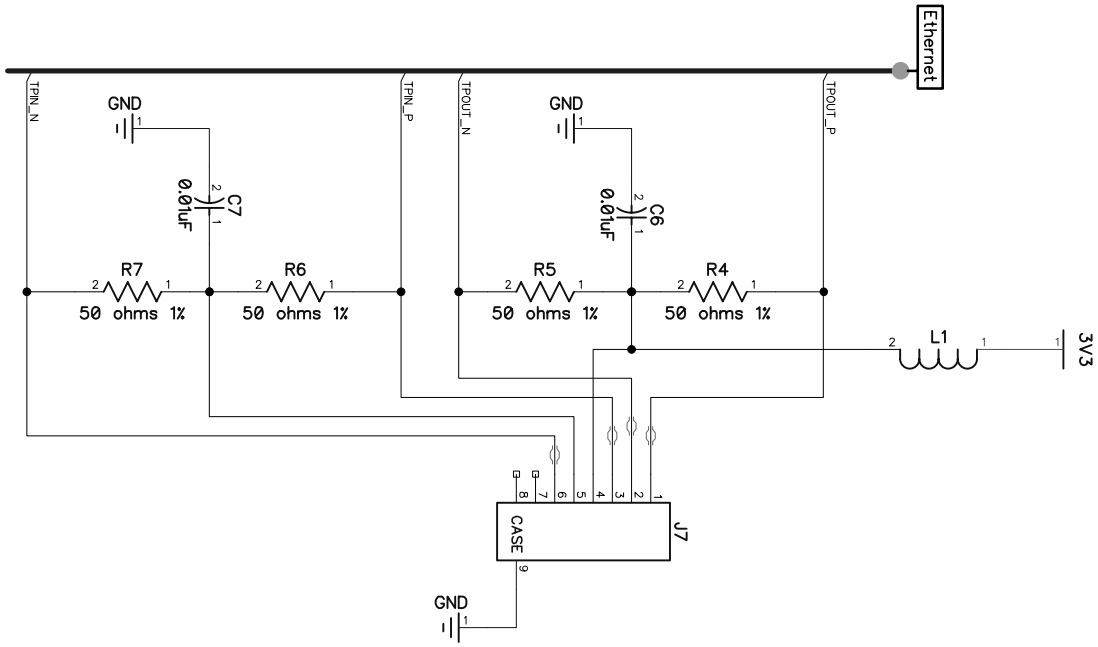
Ethernet
TPIN_N
TPIN_P
TPOUT_N
TPOUT_P
GND
GND
C7
0.01uF
C6
0.01uF
R7
50 ohms 1%
R6
50 ohms 1%
R5
50 ohms 1%
R4
50 ohms 1%
L1
3V3
J7
CASE
GND