Linux based scout UAV
LinuxベースのスカウトUAV

Sheetname: osd32mp1-1-power
File: osd32mp1-1-power.kicad_sch

Sheetname: osd32mp1-2
File: osd32mp1-2.kicad_sch

Sheetname: osd32mp1-3
File: osd32mp1-3.kicad_sch

Sheetname: battery-power
File: battery-power.kicad_sch

Sheetname: power-section-1
File: power-section-1.kicad_sch

storage
File: storage.kicad_sch

long-range-radio-1
File: long-range-radio-1.kicad_sch

quectel-m65-1
File: quectel-m65-1.kicad_sch

GNSS
File: gnss.kicad_sch

sensors-1
File: sensors-1.kicad_sch

google-tpu-coral-1
File: google-coral-tpu-1.kicad_sch

Sheet: /
File: linux-based-scout-uav.kicad_sch

Title:

Size: A3 Date: **Rev:**
KiCad E.D.A. 8.0.8 Id: 1/12

OSD32MP1 power 力

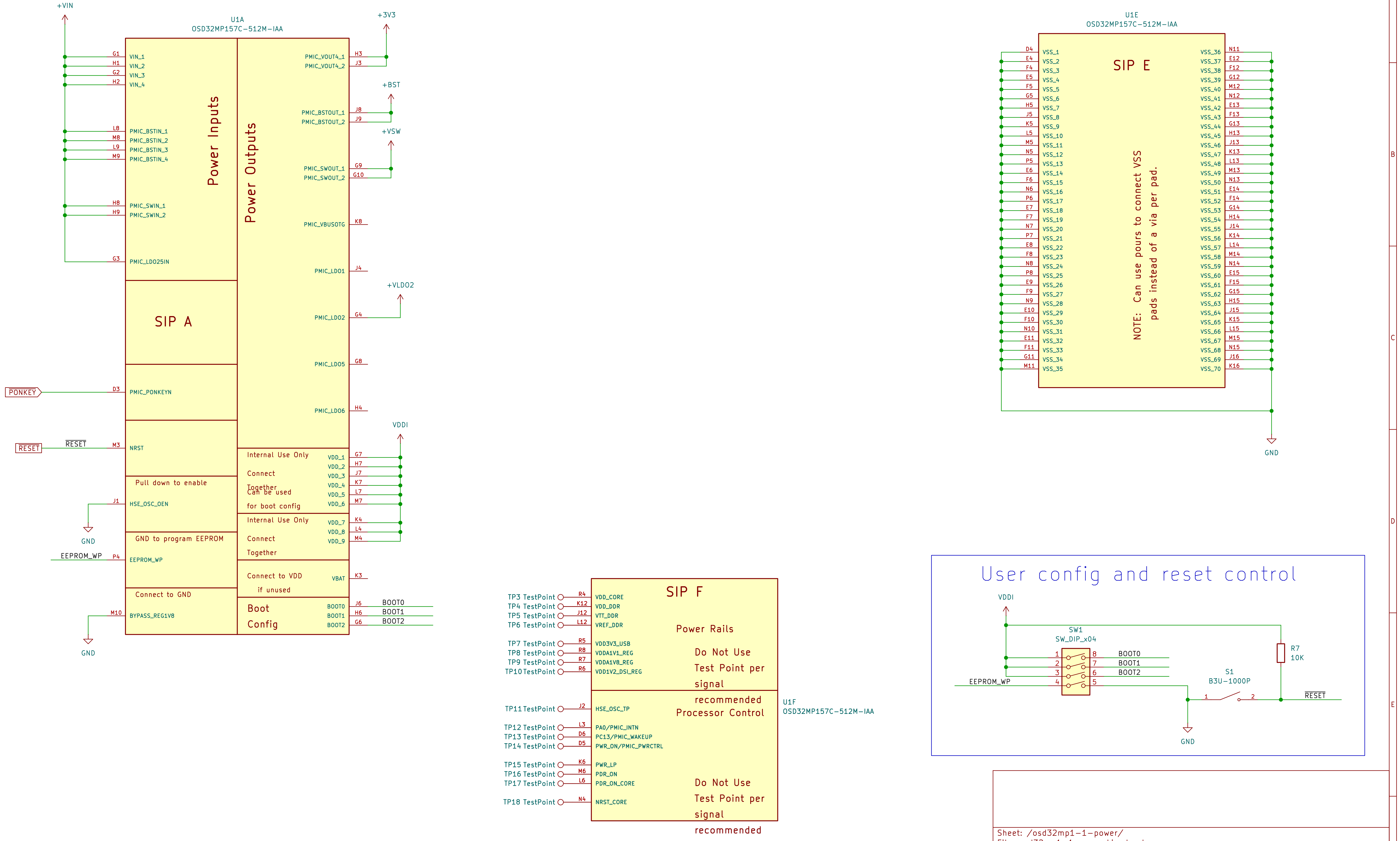

+VIN
U1A
OSD32MP157C-512M-IAA
G1 VIN_1
H1 VIN_2
G2 VIN_3
H2 VIN_4
L8 PMIC_BSTIN_1
M8 PMIC_BSTIN_2
L9 PMIC_BSTIN_3
M9 PMIC_BSTIN_4
H8 PMIC_SWIN_1
H9 PMIC_SWIN_2
G3 PMIC_LDO25IN
Power Inputs
Power Outputs
SIP A
PONKEY
D3 PMIC_PONKEYN
RESET
M3 NRST
Pull down to enable
J1 HSE_OSC_OEN
GND
GND to program EEPROM
EEPROM_WP
P4 EEPROM_WP
Connect to GND
M10 BYPASS_REG1V8
GND
+3V3
PMIC_VOUT4_1 H3
PMIC_VOUT4_2 J3
+BST
PMIC_BSTOUT_1 J8
PMIC_BSTOUT_2 J9
+VSW
PMIC_SWOUT_1 G9
PMIC_SWOUT_2 G10
PMIC_VBUSOTG K8
PMIC_LDO1 J4
+VLDO2
PMIC_LDO2 G4
PMIC_LDO5 G8
PMIC_LDO6 H4
VDDI
Internal Use Only
Connect
Together
Can be used
for boot config
VDD_1 G7
VDD_2 H7
VDD_3 J7
VDD_4 K7
VDD_5 L7
VDD_6 M7
Internal Use Only
Connect
Together
VDD_7 K4
VDD_8 L4
VDD_9 M4
Connect to VDD
if unused
VBAT K3
Boot
Config
BOOT0 J6 BOOT0
BOOT1 H6 BOOT1
BOOT2 G6 BOOT2
U1E
OSD32MP157C-512M-IAA
SIP E
NOTE: Can use pours to connect VSS
pads instead of a via per pad.
D4 VSS_1
E4 VSS_2
F4 VSS_3
E5 VSS_4
F5 VSS_5
G5 VSS_6
H5 VSS_7
J5 VSS_8
K5 VSS_9
L5 VSS_10
M5 VSS_11
N5 VSS_12
P5 VSS_13
E6 VSS_14
F6 VSS_15
N6 VSS_16
P6 VSS_17
E7 VSS_18
F7 VSS_19
N7 VSS_20
P7 VSS_21
E8 VSS_22
F8 VSS_23
N8 VSS_24
P8 VSS_25
E9 VSS_26
F9 VSS_27
N9 VSS_28
E10 VSS_29
F10 VSS_30
N10 VSS_31
E11 VSS_32
F11 VSS_33
G11 VSS_34
M11 VSS_35
VSS_36 N11
VSS_37 E12
VSS_38 F12
VSS_39 G12
VSS_40 M12
VSS_41 N12
VSS_42 E13
VSS_43 F13
VSS_44 G13
VSS_45 H13
VSS_46 J13
VSS_47 K13
VSS_48 L13
VSS_49 M13
VSS_50 N13
VSS_51 E14
VSS_52 F14
VSS_53 G14
VSS_54 H14
VSS_55 J14
VSS_56 K14
VSS_57 L14
VSS_58 M14
VSS_59 N14
VSS_60 E15
VSS_61 F15
VSS_62 G15
VSS_63 H15
VSS_64 J15
VSS_65 K15
VSS_66 L15
VSS_67 M15
VSS_68 N15
VSS_69 J16
VSS_70 K16
GND
SIP F
Power Rails
TP3 TestPoint R4 VDD_CORE
TP4 TestPoint K12 VDD_DDR
TP5 TestPoint J12 VTT_DDR
TP6 TestPoint L12 VREF_DDR
TP7 TestPoint R5 VDD3V3_USB
TP8 TestPoint R8 VDDA1V1_REG
TP9 TestPoint R7 VDDA1V8_REG
TP10 TestPoint R6 VDD1V2_DSI_REG
Do Not Use
Test Point per
signal
recommended
Processor Control
TP11 TestPoint J2 HSE_OSC_TP
TP12 TestPoint L3 PA0/PMIC_INTN
TP13 TestPoint D6 PC13/PMIC_WAKEUP
TP14 TestPoint D5 PWR_ON/PMIC_PWRCTRL
TP15 TestPoint K6 PWR_LP
TP16 TestPoint M6 PDR_ON
TP17 TestPoint L6 PDR_ON_CORE
TP18 TestPoint N4 NRST_CORE
Do Not Use
Test Point per
signal
recommended
U1F
OSD32MP157C-512M-IAA
User config and reset control
VDDI
SW1
SW_DIP_x04
1 8 BOOT0
2 7 BOOT1
3 6 BOOT2
EEPROM_WP 4 5
R7
10K
S1
B3U-1000P
1 2
RESET
GND

Sheet: /osd32mp1-1-power/
File: osd32mp1-1-power.kicad_sch

Title:

Size: A3 | Date: | **Rev:**

KiCad E.D.A. 8.0.8 | Id: 2/12

OSD32MP1

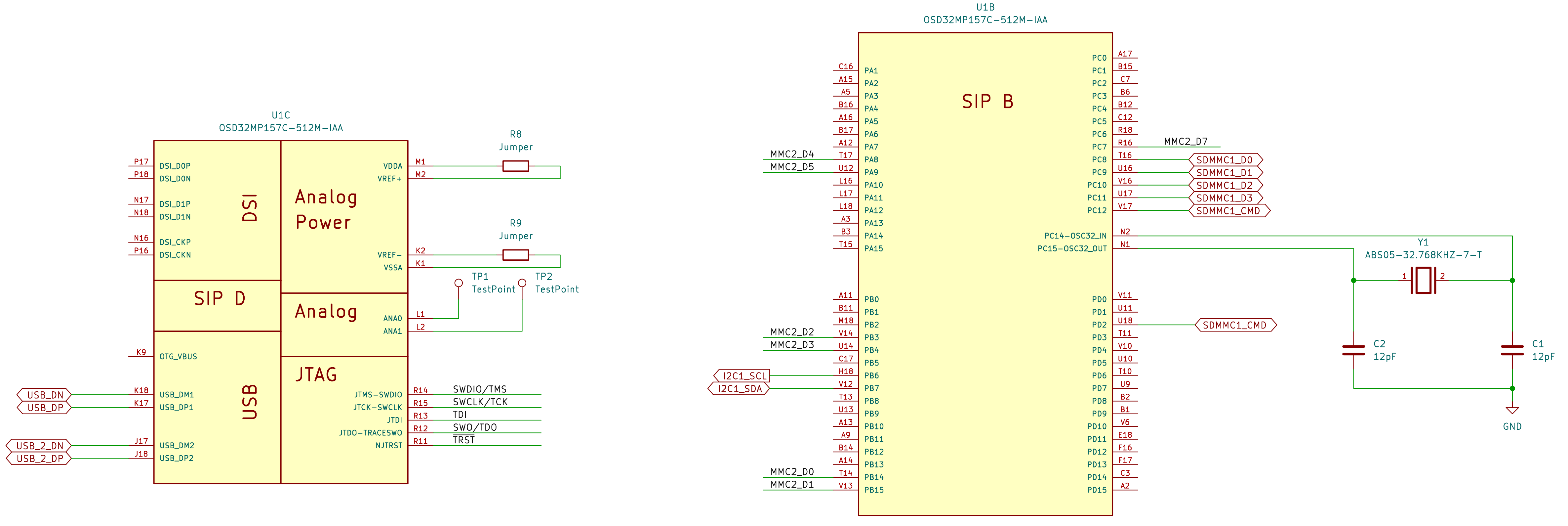
U1C
OSD32MP157C-512M-IAA
DSI
SIP D
USB
Analog Power
Analog
JTAG
P17 DSI_D0P
P18 DSI_D0N
N17 DSI_D1P
N18 DSI_D1N
N16 DSI_CKP
P16 DSI_CKN
K9 OTG_VBUS
USB_DN K18 USB_DM1
USB_DP K17 USB_DP1
USB_2_DN J17 USB_DM2
USB_2_DP J18 USB_DP2
VDDA M1
VREF+ M2
VREF- K2
VSSA K1
ANA0 L1
ANA1 L2
R8 Jumper
R9 Jumper
TP1 TestPoint
TP2 TestPoint
JTMS-SWDIO R14 SWDIO/TMS
JTCK-SWCLK R15 SWCLK/TCK
JTDI R13 TDI
JTDO-TRACESWO R12 SWO/TDO
NJTRST R11 TRST
U1B
OSD32MP157C-512M-IAA
SIP B
C16 PA1
A15 PA2
A5 PA3
B16 PA4
A16 PA5
B17 PA6
A12 PA7
MMC2_D4 T17 PA8
MMC2_D5 U12 PA9
L16 PA10
L17 PA11
L18 PA12
A3 PA13
B3 PA14
T15 PA15
A11 PB0
B11 PB1
M18 PB2
MMC2_D2 V14 PB3
MMC2_D3 U14 PB4
C17 PB5
I2C1_SCL H18 PB6
I2C1_SDA V12 PB7
T13 PB8
U13 PB9
A13 PB10
A9 PB11
B14 PB12
A14 PB13
MMC2_D0 T14 PB14
MMC2_D1 V13 PB15
PC0 A17
PC1 B15
PC2 C7
PC3 B6
PC4 B12
PC5 C12
PC6 R18
PC7 R16 MMC2_D7
PC8 T16 SDMMC1_D0
PC9 U16 SDMMC1_D1
PC10 V16 SDMMC1_D2
PC11 U17 SDMMC1_D3
PC12 V17 SDMMC1_CMD
PC14-OSC32_IN N2
PC15-OSC32_OUT N1
PD0 V11
PD1 U11
PD2 U18 SDMMC1_CMD
PD3 T11
PD4 V10
PD5 U10
PD6 T10
PD7 U9
PD8 B2
PD9 B1
PD10 V6
PD11 E18
PD12 F16
PD13 F17
PD14 C3
PD15 A2
Y1
ABS05-32.768KHZ-7-T
1
2
C2
12pF
C1
12pF
GND

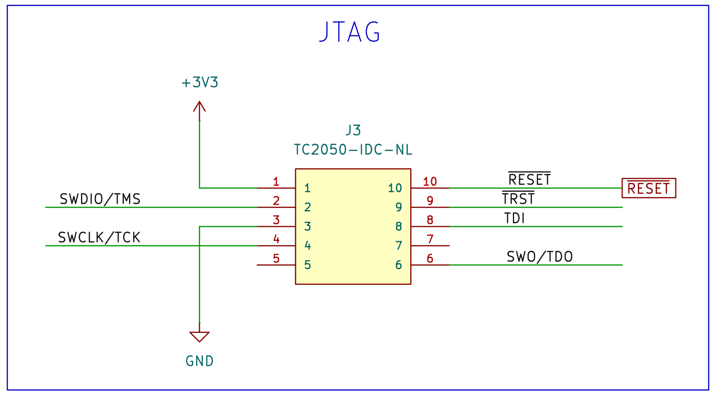
JTAG
+3V3
J3
TC2050-IDC-NL
SWDIO/TMS
SWCLK/TCK
1
2
3
4
5
10
9
8
7
6
RESET
TRST
TDI
SWO/TDO
RESET
GND

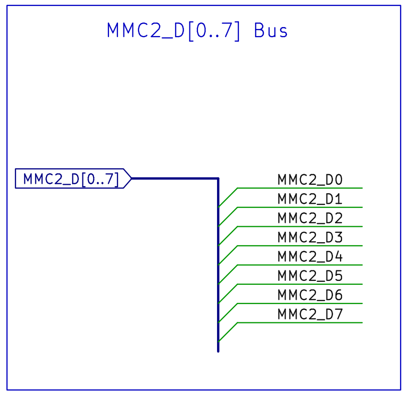
MMC2_D[0..7] Bus
MMC2_D[0..7]
MMC2_D0
MMC2_D1
MMC2_D2
MMC2_D3
MMC2_D4
MMC2_D5
MMC2_D6
MMC2_D7

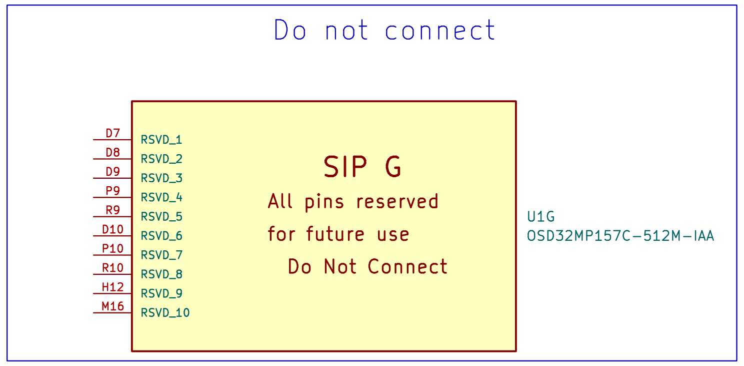
Do not connect
SIP G
All pins reserved
for future use
Do Not Connect
D7 RSVD_1
D8 RSVD_2
D9 RSVD_3
P9 RSVD_4
R9 RSVD_5
D10 RSVD_6
P10 RSVD_7
R10 RSVD_8
H12 RSVD_9
M16 RSVD_10
U1G
OSD32MP157C-512M-IAA

Sheet: /osd32mp1-2/
File: osd32mp1-2.kicad_sch

Title:

Size: A3 Date: **Rev:**
KiCad E.D.A. 8.0.8 Id: 3/12

OSD32MP1

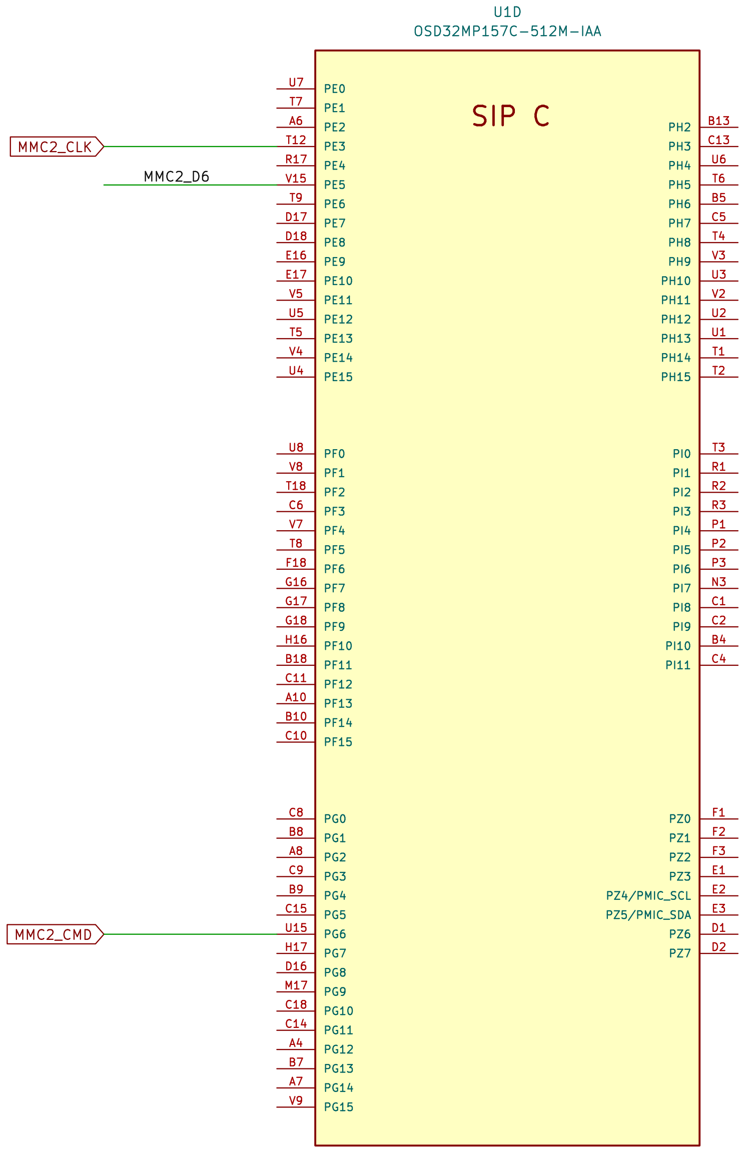
U1D
OSD32MP157C-512M-IAA
SIP C
MMC2_CLK
MMC2_D6
MMC2_CMD
U7 PE0
T7 PE1
A6 PE2
T12 PE3
R17 PE4
V15 PE5
T9 PE6
D17 PE7
D18 PE8
E16 PE9
E17 PE10
V5 PE11
U5 PE12
T5 PE13
V4 PE14
U4 PE15
U8 PF0
V8 PF1
T18 PF2
C6 PF3
V7 PF4
T8 PF5
F18 PF6
G16 PF7
G17 PF8
G18 PF9
H16 PF10
B18 PF11
C11 PF12
A10 PF13
B10 PF14
C10 PF15
C8 PG0
B8 PG1
A8 PG2
C9 PG3
B9 PG4
C15 PG5
U15 PG6
H17 PG7
D16 PG8
M17 PG9
C18 PG10
C14 PG11
A4 PG12
B7 PG13
A7 PG14
V9 PG15
PH2 B13
PH3 C13
PH4 U6
PH5 T6
PH6 B5
PH7 C5
PH8 T4
PH9 V3
PH10 U3
PH11 V2
PH12 U2
PH13 U1
PH14 T1
PH15 T2
PI0 T3
PI1 R1
PI2 R2
PI3 R3
PI4 P1
PI5 P2
PI6 P3
PI7 N3
PI8 C1
PI9 C2
PI10 B4
PI11 C4
PZ0 F1
PZ1 F2
PZ2 F3
PZ3 E1
PZ4/PMIC_SCL E2
PZ5/PMIC_SDA E3
PZ6 D1
PZ7 D2

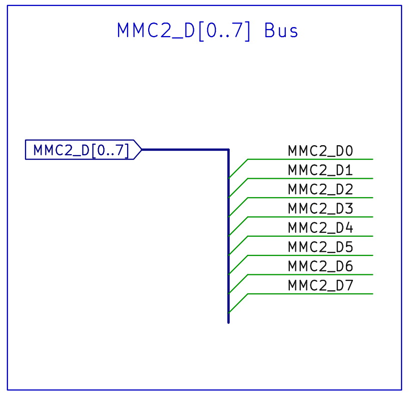
MMC2_D[0..7] Bus
MMC2_D[0..7]
MMC2_D0
MMC2_D1
MMC2_D2
MMC2_D3
MMC2_D4
MMC2_D5
MMC2_D6
MMC2_D7

Sheet: /osd32mp1-3/
File: osd32mp1-3.kicad_sch

Title:

Size: A3	Date:	**Rev:**
KiCad E.D.A. 8.0.8		Id: 4/12

Battery Power

バッテリー電源

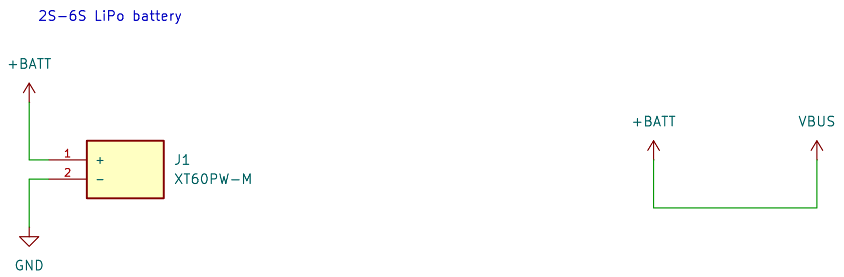
2S-6S LiPo battery
+BATT
1
2
+
-
J1
XT60PW-M
GND
+BATT
VBUS

Sheet: /battery-power/
File: battery-power.kicad_sch

Title:

Size: A3	Date:	**Rev:**
KiCad E.D.A. 8.0.8		Id: 5/12

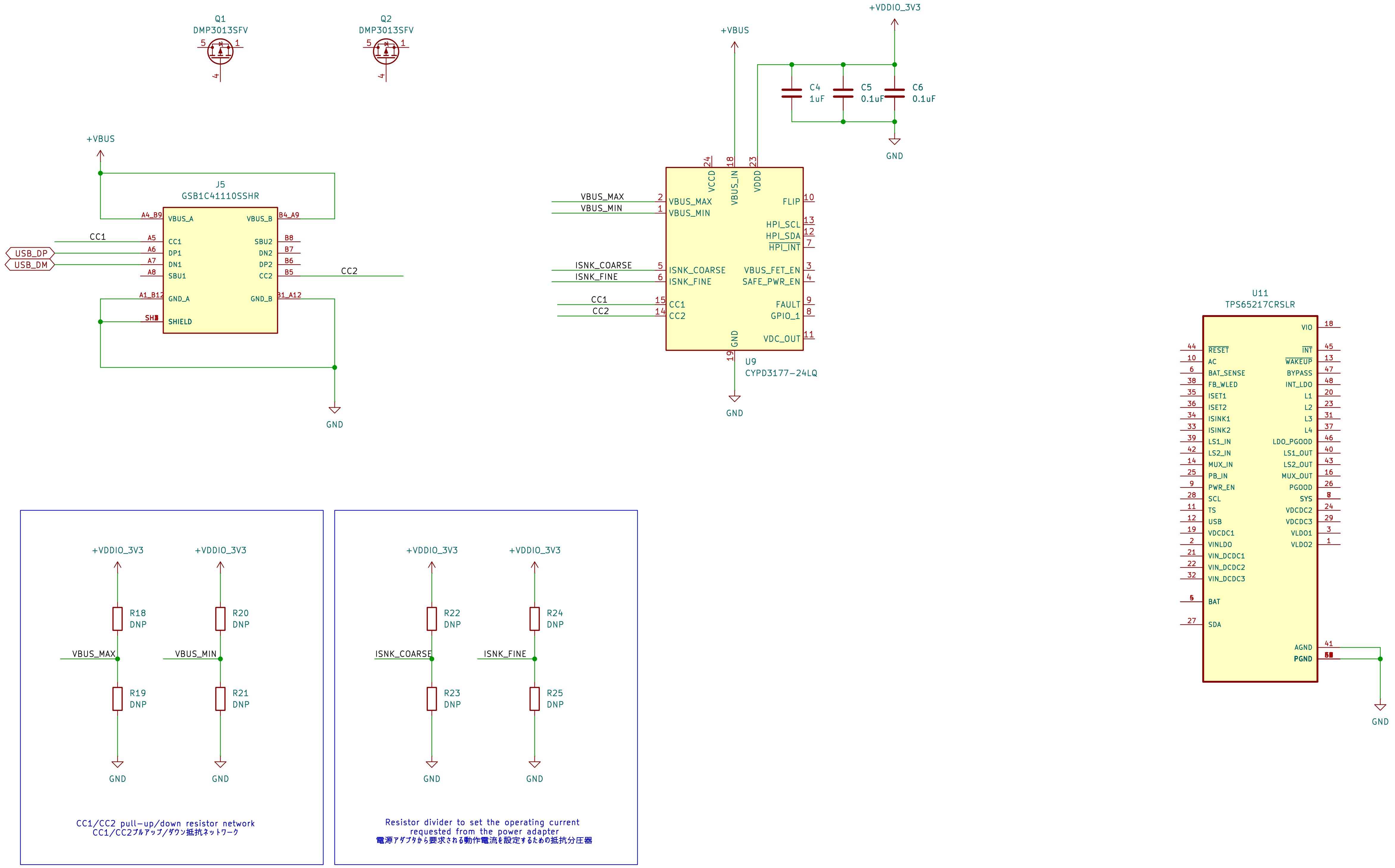
Q1
DMP3013SFV
5
1
4
Q2
DMP3013SFV
5
1
4
+VBUS
J5
GSB1C41110SSHR
A4_B9
VBUS_A
VBUS_B
B4_A9
CC1
A5
CC1
SBU2
B8
USB_DP
A6
DP1
DN2
B7
USB_DM
A7
DN1
DP2
B6
A8
SBU1
CC2
B5
CC2
A1_B12
GND_A
GND_B
B1_A12
SH
SHIELD
GND
+VBUS
+VDDIO_3V3
C4
1uF
C5
0.1uF
C6
0.1uF
GND
24
VCCD
18
VBUS_IN
23
VDDD
VBUS_MAX
2
VBUS_MAX
VBUS_MIN
1
VBUS_MIN
FLIP
10
HPI_SCL
13
HPI_SDA
12
HPI_INT
7
ISNK_COARSE
5
ISNK_COARSE
ISNK_FINE
6
ISNK_FINE
VBUS_FET_EN
3
SAFE_PWR_EN
4
CC1
15
CC1
CC2
14
CC2
FAULT
9
GPIO_1
8
VDC_OUT
11
19
GND
U9
CYPD3177-24LQ
GND
U11
TPS65217CRSLR
VIO
18
44
RESET
INT
45
10
AC
WAKEUP
13
6
BAT_SENSE
BYPASS
47
38
FB_WLED
INT_LDO
48
35
ISET1
L1
20
36
ISET2
L2
23
34
ISINK1
L3
31
33
ISINK2
L4
37
39
LS1_IN
LDO_PGOOD
46
42
LS2_IN
LS1_OUT
40
14
MUX_IN
LS2_OUT
43
25
PB_IN
MUX_OUT
16
9
PWR_EN
PGOOD
26
28
SCL
SYS
8
11
TS
VDCDC2
24
12
USB
VDCDC3
29
19
VDCDC1
VLDO1
3
2
VINLDO
VLDO2
1
21
VIN_DCDC1
22
VIN_DCDC2
32
VIN_DCDC3
5
BAT
27
SDA
AGND
41
PGND
GND
+VDDIO_3V3
+VDDIO_3V3
R18
DNP
R20
DNP
VBUS_MAX
VBUS_MIN
R19
DNP
R21
DNP
GND
GND
+VDDIO_3V3
+VDDIO_3V3
R22
DNP
R24
DNP
ISNK_COARSE
ISNK_FINE
R23
DNP
R25
DNP
GND
GND

CC1/CC2 pull-up/down resistor network
CC1/CC2プルアップ/ダウン抵抗ネットワーク

Resistor divider to set the operating current
requested from the power adapter
電源アダプタから要求される動作電流を設定するための抵抗分圧器

Sheet: /power-section-1/
File: power-section-1.kicad_sch
Title:
Size: A3 | Date: | **Rev:**
KiCad E.D.A. 8.0.8 | Id: 6/12

Storage
貯蔵

SD card

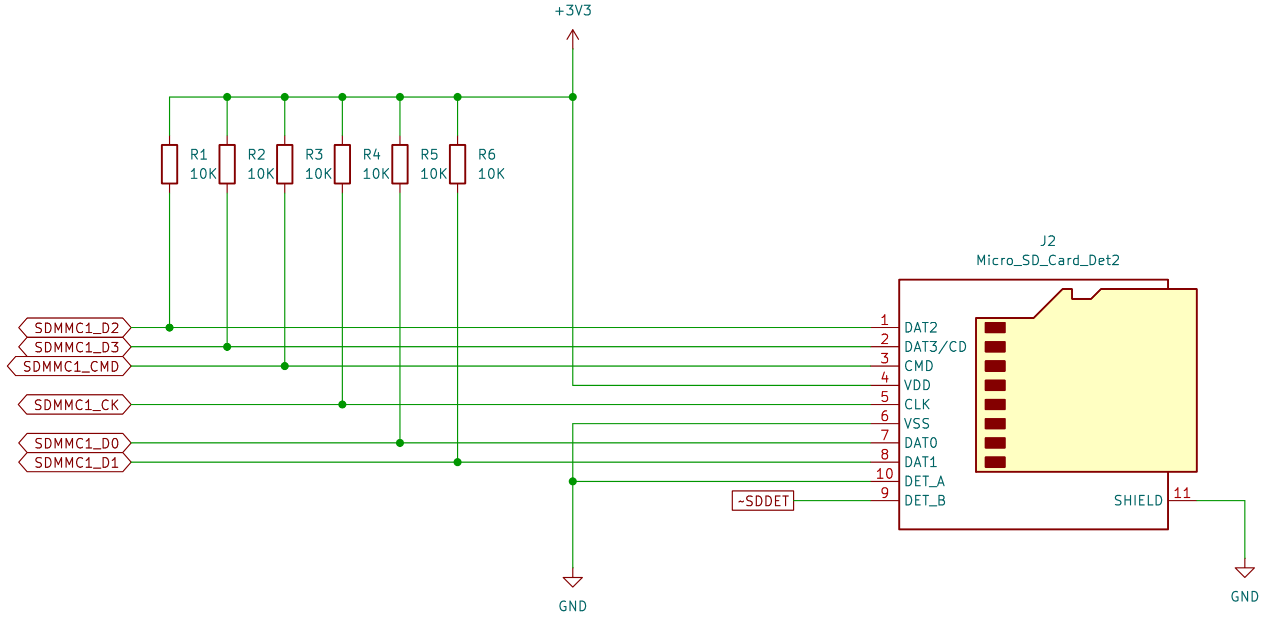

+3V3
R1 10K
R2 10K
R3 10K
R4 10K
R5 10K
R6 10K
J2
Micro_SD_Card_Det2
SDMMC1_D2
SDMMC1_D3
SDMMC1_CMD
SDMMC1_CK
SDMMC1_D0
SDMMC1_D1
~SDDET
1 DAT2
2 DAT3/CD
3 CMD
4 VDD
5 CLK
6 VSS
7 DAT0
8 DAT1
10 DET_A
9 DET_B
SHIELD 11
GND
GND

eMMC

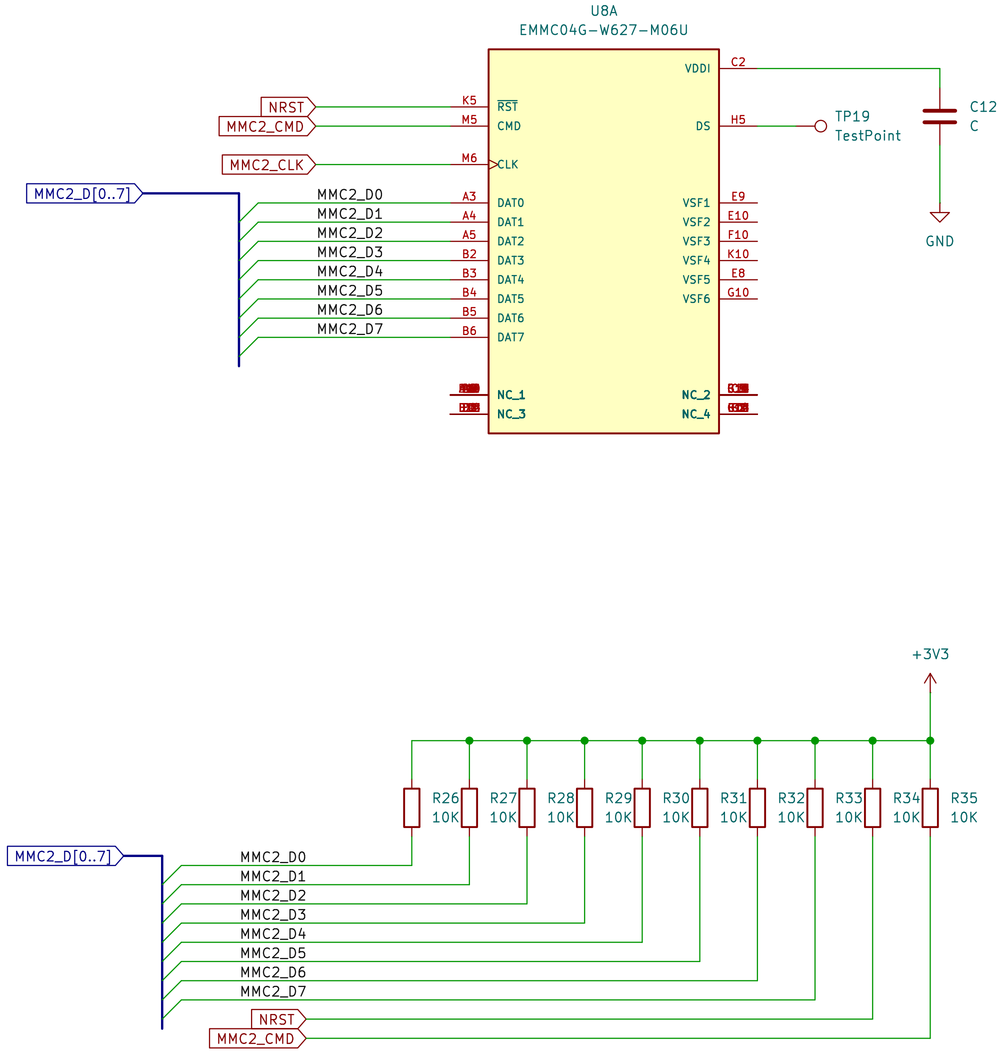

U8A
EMMC04G-W627-M06U
NRST
MMC2_CMD
MMC2_CLK
MMC2_D[0..7]
MMC2_D0
MMC2_D1
MMC2_D2
MMC2_D3
MMC2_D4
MMC2_D5
MMC2_D6
MMC2_D7
K5 RST
M5 CMD
M6 CLK
A3 DAT0
A4 DAT1
A5 DAT2
B2 DAT3
B3 DAT4
B4 DAT5
B5 DAT6
B6 DAT7
NC_1
NC_3
VDDI C2
DS H5
VSF1 E9
VSF2 E10
VSF3 F10
VSF4 K10
VSF5 E8
VSF6 G10
NC_2
NC_4
TP19
TestPoint
C12
C
GND
+3V3
R26 10K
R27 10K
R28 10K
R29 10K
R30 10K
R31 10K
R32 10K
R33 10K
R34 10K
R35 10K
MMC2_D[0..7]
MMC2_D0
MMC2_D1
MMC2_D2
MMC2_D3
MMC2_D4
MMC2_D5
MMC2_D6
MMC2_D7
NRST
MMC2_CMD

eMMC power

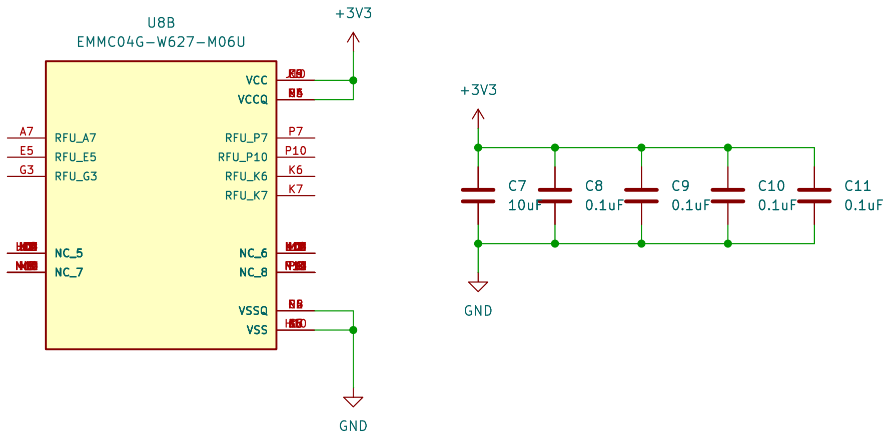

U8B
EMMC04G-W627-M06U
+3V3
VCC
VCCQ
A7 RFU_A7
E5 RFU_E5
G3 RFU_G3
RFU_P7 P7
RFU_P10 P10
RFU_K6 K6
RFU_K7 K7
NC_5
NC_7
NC_6
NC_8
VSSQ
VSS
GND
+3V3
C7 10uF
C8 0.1uF
C9 0.1uF
C10 0.1uF
C11 0.1uF
GND

Sheet: /storage/
File: storage.kicad_sch

Title:

Size: A3
Date:
Rev:
KiCad E.D.A. 8.0.8
Id: 7/12

Long range radio

SX1272 LoRaWAN IC option

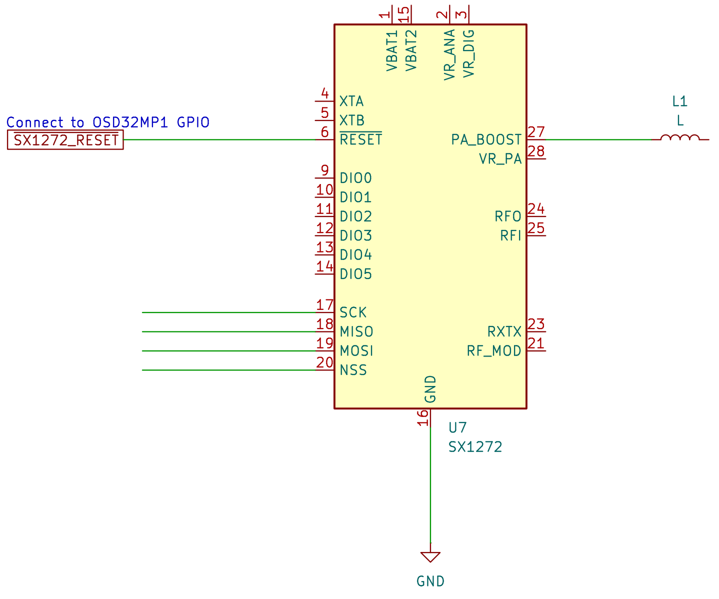
Connect to OSD32MP1 GPIO
SX1272_RESET
VBAT1
VBAT2
VR_ANA
VR_DIG
1
15
2
3
4 XTA
5 XTB
6 RESET
9 DIO0
10 DIO1
11 DIO2
12 DIO3
13 DIO4
14 DIO5
17 SCK
18 MISO
19 MOSI
20 NSS
PA_BOOST 27
VR_PA 28
RFO 24
RFI 25
RXTX 23
RF_MOD 21
GND
16
U7
SX1272
L1
L
GND

RN2903 LoRa module option

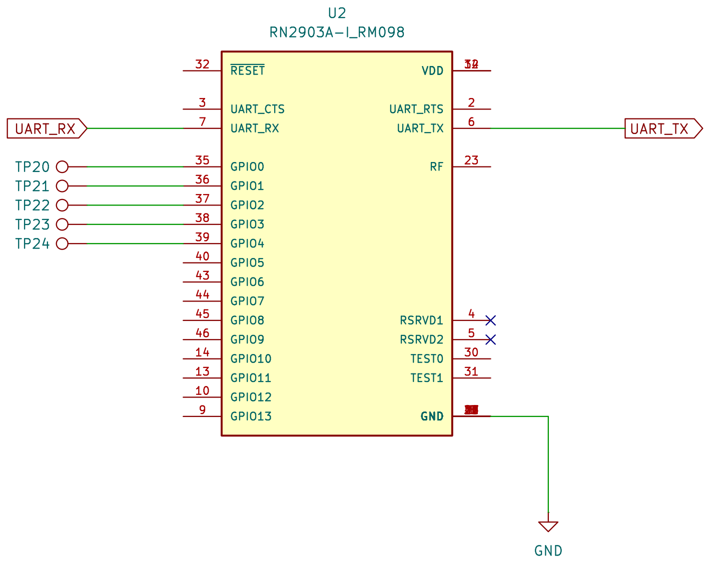
U2
RN2903A-I_RM098
32 RESET
3 UART_CTS
7 UART_RX
35 GPIO0
36 GPIO1
37 GPIO2
38 GPIO3
39 GPIO4
40 GPIO5
43 GPIO6
44 GPIO7
45 GPIO8
46 GPIO9
14 GPIO10
13 GPIO11
10 GPIO12
9 GPIO13
VDD 12
UART_RTS 2
UART_TX 6
RF 23
RSRVD1 4
RSRVD2 5
TEST0 30
TEST1 31
GND
UART_RX
UART_TX
TP20
TP21
TP22
TP23
TP24
GND

Sheet: /long-range-radio-1/
File: long-range-radio-1.kicad_sch

Title:

Size: A3
Date:
Rev:
KiCad E.D.A. 8.0.8
Id: 8/12

GSM/GPRS 2G Comms

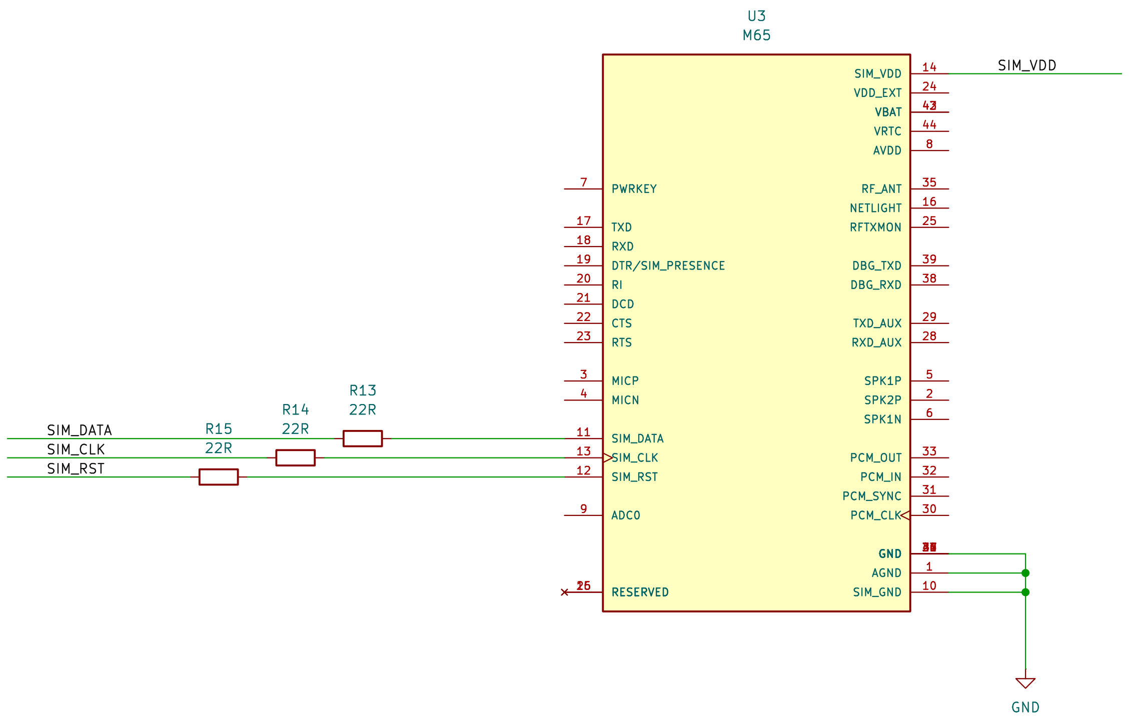
U3
M65
SIM_VDD 14
VDD_EXT 24
VBAT 43
VRTC 44
AVDD 8
RF_ANT 35
NETLIGHT 16
RFTXMON 25
DBG_TXD 39
DBG_RXD 38
TXD_AUX 29
RXD_AUX 28
SPK1P 5
SPK2P 2
SPK1N 6
PCM_OUT 33
PCM_IN 32
PCM_SYNC 31
PCM_CLK 30
GND
AGND 1
SIM_GND 10
7 PWRKEY
17 TXD
18 RXD
19 DTR/SIM_PRESENCE
20 RI
21 DCD
22 CTS
23 RTS
3 MICP
4 MICN
11 SIM_DATA
13 SIM_CLK
12 SIM_RST
9 ADC0
26 RESERVED
SIM_VDD
R13
22R
R14
22R
R15
22R
SIM_DATA
SIM_CLK
SIM_RST
GND

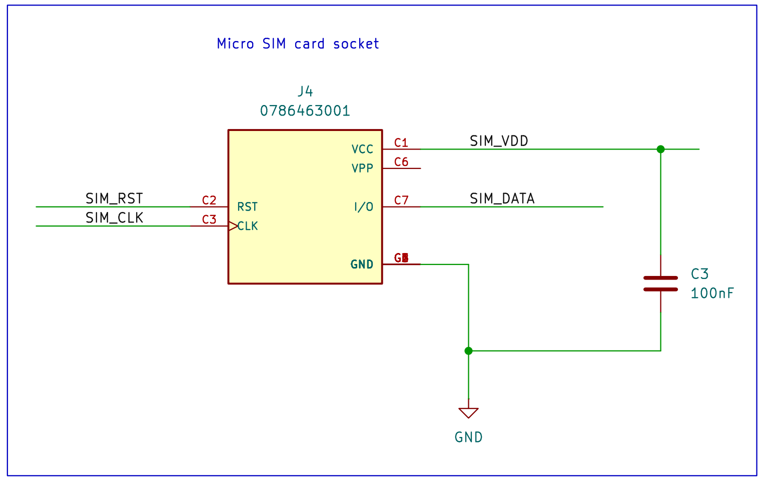
Micro SIM card socket
J4
0786463001
VCC C1
VPP C6
I/O C7
GND G1
C2 RST
C3 CLK
SIM_VDD
SIM_DATA
SIM_RST
SIM_CLK
C3
100nF
GND

Sheet: /quectel-m65-1/
File: quectel-m65-1.kicad_sch

Title:

Size: A3
Date:
Rev:
KiCad E.D.A. 8.0.8
Id: 9/12

GNSS

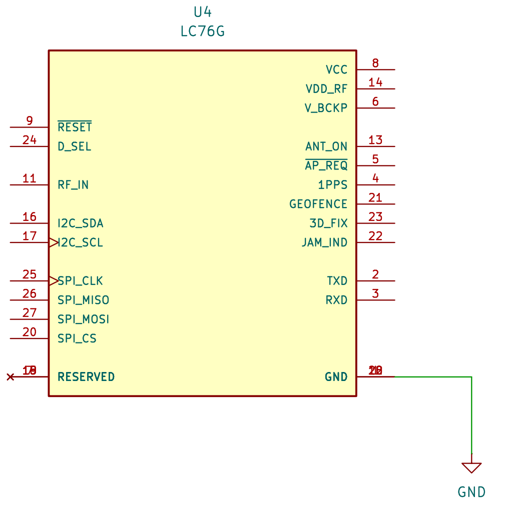
U4
LC76G
VCC 8
VDD_RF 14
V_BCKP 6
ANT_ON 13
AP_REQ 5
1PPS 4
GEOFENCE 21
3D_FIX 23
JAM_IND 22
TXD 2
RXD 3
GND 20
9 RESET
24 D_SEL
11 RF_IN
16 I2C_SDA
17 I2C_SCL
25 SPI_CLK
26 SPI_MISO
27 SPI_MOSI
20 SPI_CS
18 RESERVED
GND

Sheet: /GNSS/
File: gnss.kicad_sch

Title:

Size: A3 | Date: | **Rev:**
KiCad E.D.A. 8.0.8 | Id: 10/12

Sensors
センサー

MPU-6050

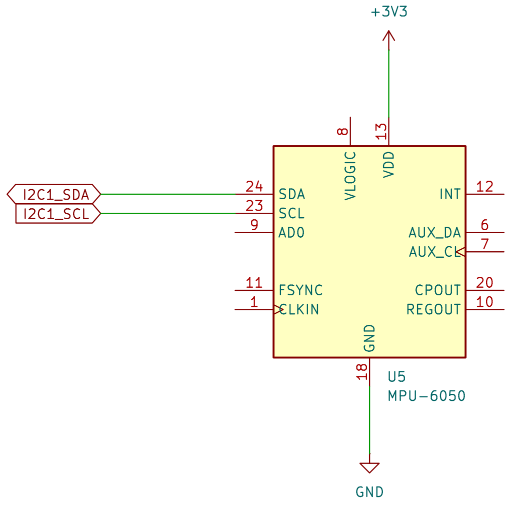

+3V3
8
13
VLOGIC
VDD
I2C1_SDA
I2C1_SCL
24
23
9
SDA
SCL
AD0
INT
12
AUX_DA
AUX_CL
6
7
11
1
FSYNC
CLKIN
CPOUT
REGOUT
20
10
GND
18
U5
MPU-6050
GND

AMG8833

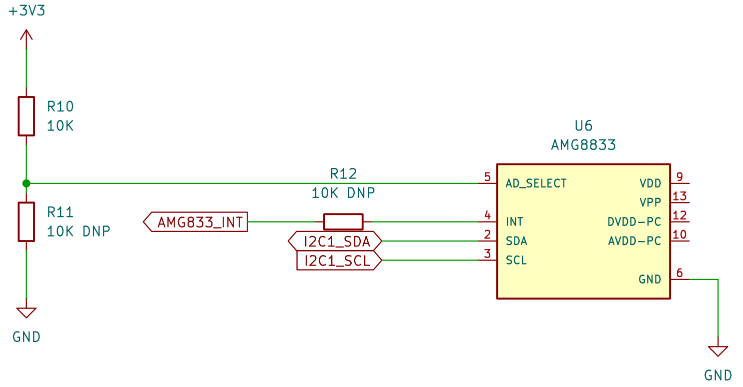

+3V3
R10
10K
R11
10K DNP
GND
R12
10K DNP
AMG833_INT
I2C1_SDA
I2C1_SCL
U6
AMG8833
5
4
2
3
AD_SELECT
INT
SDA
SCL
VDD
VPP
DVDD-PC
AVDD-PC
GND
9
13
12
10
6
GND

I2C1 Pull-up resistor

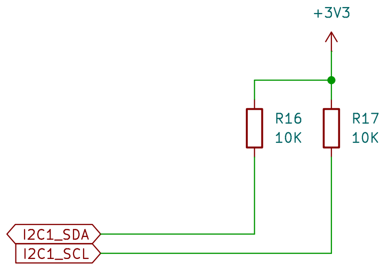

+3V3
R16
10K
R17
10K
I2C1_SDA
I2C1_SCL

Sheet: /sensors-1/
File: sensors-1.kicad_sch

Title:

Size: A3 Date: **Rev:**
KiCad E.D.A. 8.0.8 Id: 11/12

Google Coral edge tensor processing unit
Google Coral エッジテンソル処理ユニット

Board to board mezzanine connector
基板対基板メザニンコネクタ

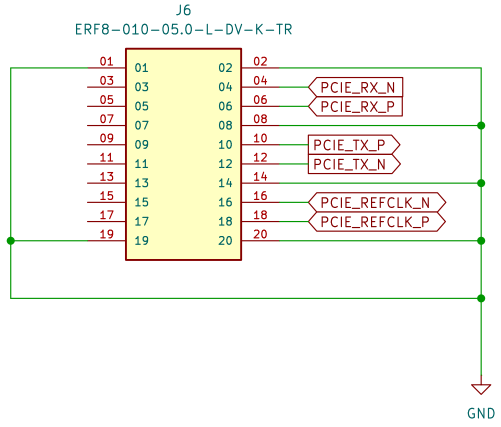
J6
ERF8-010-05.0-L-DV-K-TR
01
02
03
04
05
06
07
08
09
10
11
12
13
14
15
16
17
18
19
20
PCIE_RX_N
PCIE_RX_P
PCIE_TX_P
PCIE_TX_N
PCIE_REFCLK_N
PCIE_REFCLK_P
GND

Used to expose PCIe interface on Google Coral

Google Coral Edge TPU

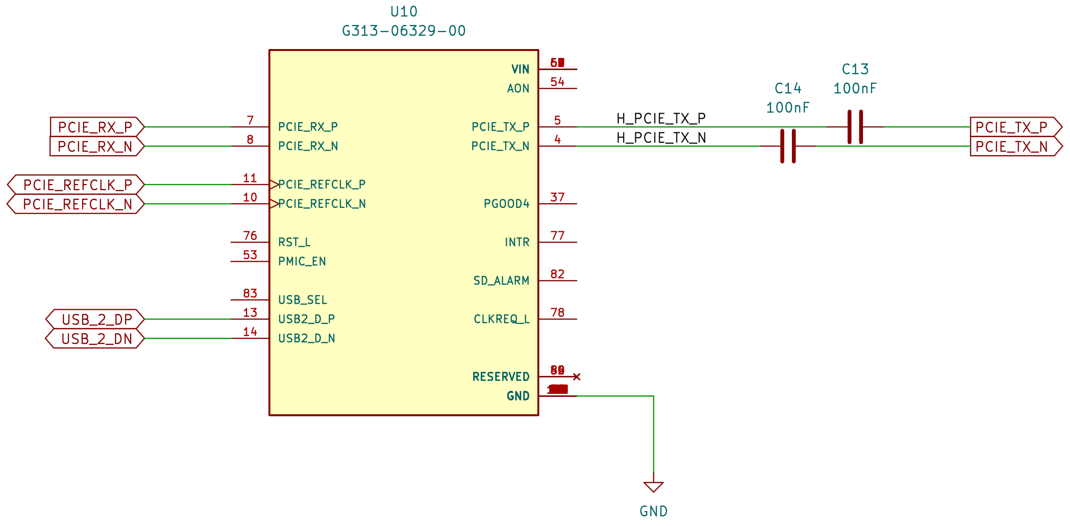
U10
G313-06329-00
PCIE_RX_P
PCIE_RX_N
PCIE_REFCLK_P
PCIE_REFCLK_N
USB_2_DP
USB_2_DN
7
8
11
10
76
53
83
13
14
RST_L
PMIC_EN
USB_SEL
USB2_D_P
USB2_D_N
VIN
AON
PCIE_TX_P
PCIE_TX_N
PGOOD4
INTR
SD_ALARM
CLKREQ_L
RESERVED
GND
54
5
4
37
77
82
78
H_PCIE_TX_P
H_PCIE_TX_N
C14
100nF
C13
100nF
PCIE_TX_P
PCIE_TX_N
GND

Sheet: /google-tpu-coral-1/
File: google-coral-tpu-1.kicad_sch
Title:
Size: A3
Date:
Rev:
KiCad E.D.A. 8.0.8
Id: 12/12