DATA SHEET

VSC100-2800S SERIES

RADIATION TOLERANT DC-DC CONVERTERS

VSC100-2800S - Exact marking may differ from that shown

Models Available
Input: 16 V to 40 V continuous, 50 V transient
Single output: 3.3 V, 5 V, 12 V, 15 V, or 28 V
Wattage: 66 - 100 W

1.0 DESCRIPTION

The VSC100-2800S Series is a commercial off the shelf DC-DC converter designed for the 'NewSpace' market. Performance is guaranteed through the use of radiation lot acceptance tested (RLAT) components. Our proprietary packaging creates a dual side heatsinking option with very low outgassing.

Radiation tested to 42 MeV/mg/cm² with no destructive SEE events (SEGR and SEL) and tested to 40 krad(Si), guaranteed to 30 krad(Si), for TID in accordance with VPT's inhouse radiation hardness assurance (RHA) plan.

The VSC100-2800S Series are designed for smaller satellites in low Earth orbit (LEO), and NASA Class D missions where the balance of cost and guaranteed performance is critical.

1.1 FEATURES

- Output Voltage:
  3.3 V / 66W, 5 V / 100W, 12 V / 100W, 15 V / 100W, 28 V / 100W
- Output Voltage Trim +10 % / -20 %
- Wide Input Voltage Range: 16 V to 40 V plus 50 V transient
- Continuous operation over full military temperature range of -55 °C to +105 °C with no power derating
- Fixed Frequency
- Frequency Synchronization
- Very low output noise
- No use of opto-isolators
- Undervoltage lockout
- Current limit protection / short circuit protection
- Parallel Up to 5 Units With Current Sharing

1.2 SPACE LEVEL CHARACTERIZATIONS

- Guaranteed TID performance to 30 krad(Si) including LDR
- SEE tested to 42 MeV/mg/cm^2. Transients are fully analyzed for cross-section and magnitude at 30 MeV/mg/cm^2
- Radiation Hardness Assurance, see Section 6.5 herein
- Mean Time Between Failures (MTBF) calculations available
- Failure In Time (FIT) numbers available

1.3 MANUFACTURING AND COMPLIANCE

- Manufactured in an ISO9001, J-STD-001, and IPC-A-610 certified facility
- MIL-STD-461 C-G conducted emissions when used with the appropriate VPT EMI filter

1.4 PACKAGING

- Low-profile: 2.350" x 1.550" x 0.410"
- Max weight: 79 g
- Outgassing less than 1.5% TML and 0.12% CVCM

1.5 ACCESSORIES

- VSCF10-28 EMI Filter
- VSCF20-28 EMI Filter
- Thermal Pads TP-016 or TP2-016

2.0 DIAGRAMS

2.1 BLOCK DIAGRAM

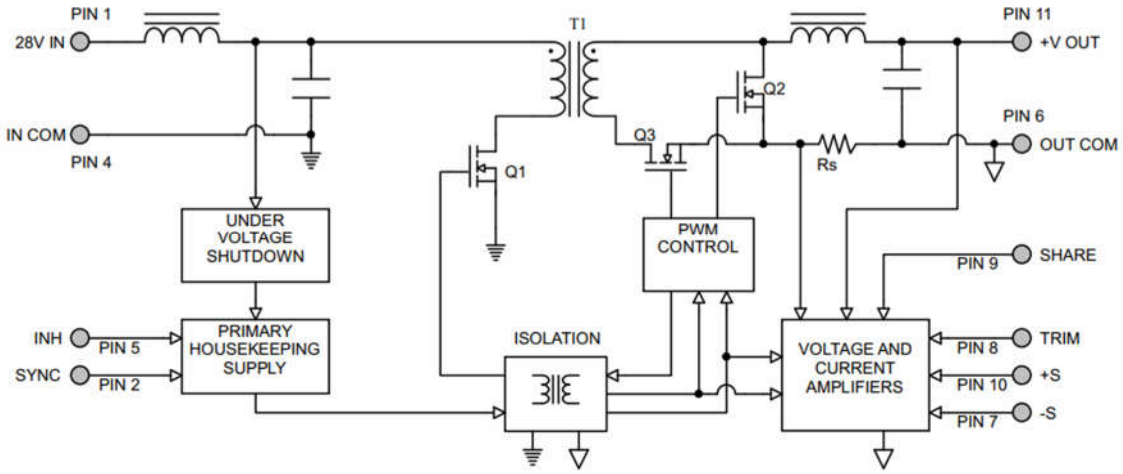

(Not applicable to the VSC100-2828S)

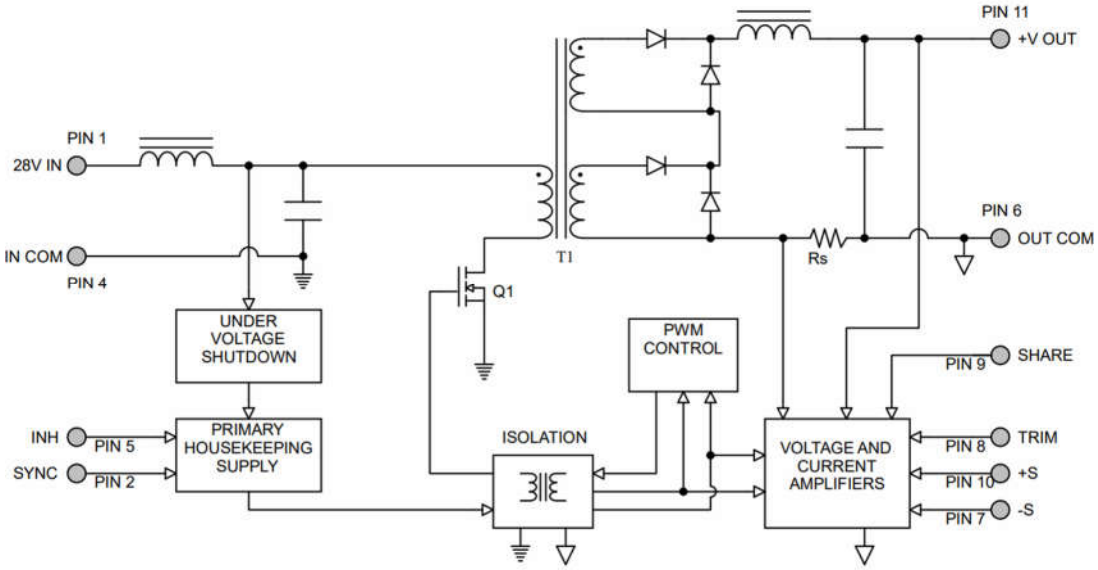

(Only applicable to the VSC100-2828S)

2.2 CONNECTION DIAGRAM

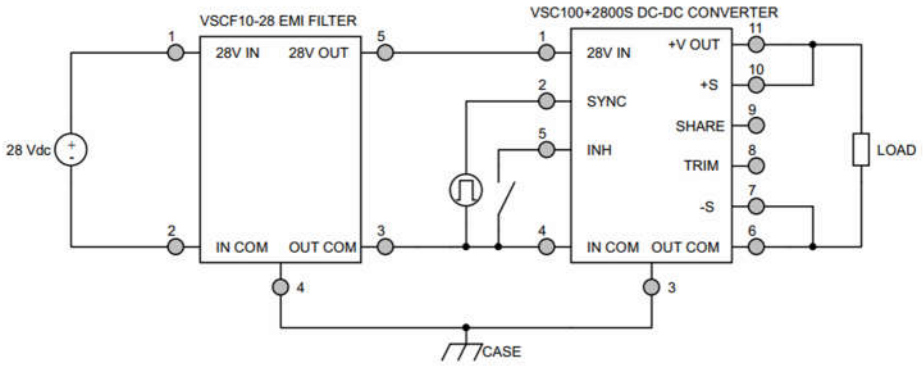

2.3 PARALLEL CONNECTION DIAGRAM

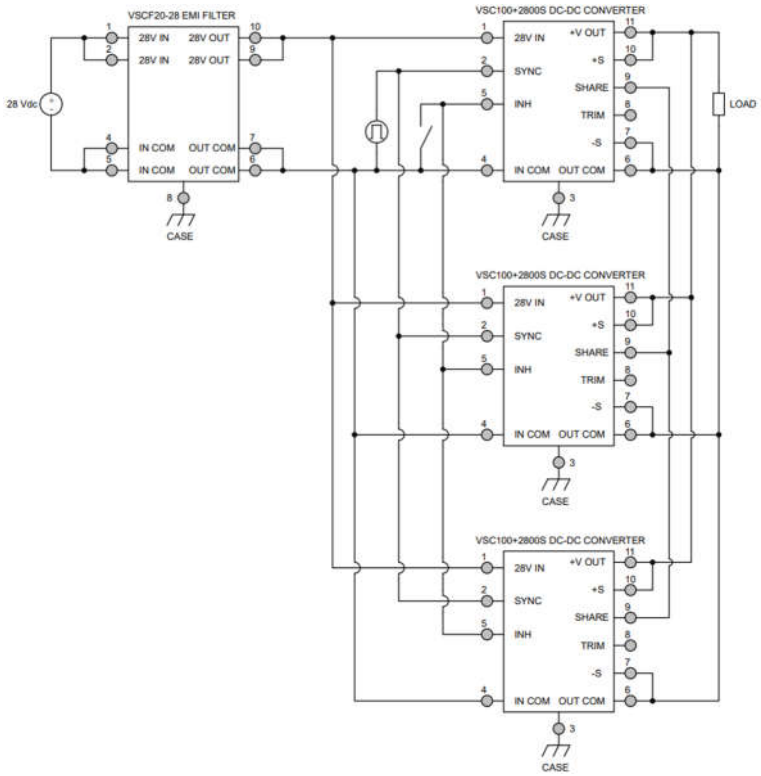

Current Sharing Parallel Connection for Multiple Converters (SYNC connection is optional)

3.0 SPECIFICATIONS

3.1 ABSOLUTE MAXIMUM RATINGS

Absolute Maximum Ratings			
Input Voltage (Continuous)[1]:	-0.5 V to 40 V	Operating Temperature (Full Load):	-55 °C to +105 °C
Input Voltage (Transient, 1 second):	-0.5 V to 50 V	Storage Temperature:	-55 °C to +125 °C
		Lead Solder Temperature (10 seconds):	300 °C

1. Limited to 36 V for operation in a heavy ion environment at LET ≥ 30 MeV/mg/cm^2 and Tcase = +25 °C (excluding the VSC100-2828S)

3.2 PERFORMANCE SPECIFICATIONS

Tcase = -55 °C to +105 °C, Vin = +28 V ± 5%, Full Load, Unless Otherwise Specified

		VSC100-283R3S			VSC100-2805S			
Parameter	**Conditions**	**Min**	**Typ**	**Max**	**Min**	**Typ**	**Max**	**Units**
INPUT								
Voltage	Continuous	16	28	40[5]	16	28	40[5]	V
	Transient, 1 sec[2]	-	-	50	-	-	50	V
Current	INH < 1.5 V	-	7.5	8	-	7.5	8	mA
	No Load	-	100	200	-	140	250	mA
Ripple Current	20 Hz to 10 MHz	-	-	180	-	-	200	mApp
Undervoltage Lockout	Turn-On	14.5	-	15.8	14.5	-	15.8	V
	Turn-Off[2]	14	-	15	14	-	15	V
OUTPUT STATIC								
Voltage	Tcase = 25 °C	3.25	3.3	3.35	4.92	5	5.08	V
	Tcase = -55 °C to +105 °C	3.21	3.3	3.39	4.87	5	5.13	V
Power[3]		0	-	66	0	-	100	W
Current[3]		0	-	20	0	-	20	A
Ripple Voltage	20 Hz to 10 MHz	-	-	150	-	-	150	mVpp
Line Regulation	Vin = 16 V to 40 V	-	-	20	-	-	20	mV
Load Regulation	No Load to Full Load	-	-	20	-	-	20	mV
Load Fault Power Dissipation	Overload[2]	-	-	24	-	-	24	W
	Short Circuit[2]	-	-	24	-	-	24	W
OUTPUT DYNAMIC								
Load Step, Half to Full Load	Output Transient	-	-	250	-	-	250	mVpk
	Recovery[1]	-	-	400	-	-	300	µs
Line Step[2], Vin = 16 V to 40 V	Output Transient	-	150	300	-	150	300	mVpk
	Recovery[1]	-	55	150	-	50	150	µs
Turn-On, Vin = 0 V to 28 V	Delay	-	3	10	-	3	10	ms
	Overshoot	-	15	25	-	15	25	mVpk
FUNCTION								
INH Pin Input[2]	Output Inhibited	0	-	1.5	0	-	1.5	V
INH Pin Open Circuit Voltage[2]	Output Enabled	10	-	12	10	-	12	V
Voltage Trim Range		-20	-	10	-20	-	10	%
SHARE Pin Voltage[2]		0	-	10	0	-	10	V
Current Share Accuracy[2]		-	5	-	-	5	-	%
SYNC Frequency Range	V_H - V_L = 5 V, D = 20-80%	240	-	325	240	-	325	kHz
GENERAL								
Efficiency		82	85	-	85	88	-	%
Capacitive Load[2]		-	-	1000	-	-	1000	µF
Switching Frequency		230	260	290	230	260	290	kHz
Isolation	500 V DC, Tcase = 25 °C	100	-	-	100	-	-	MΩ
Weight		-	-	79	-	-	79	g
MTBF (MIL-HDBK-217F)	SF @ Tcase = 55 °C	-	12.2	-	-	12.2	-	MHr
POST-RAD LIMITS[4]								
Output Voltage	Tcase = -55 °C to +105 °C	3.15	3.3	3.45	4.77	5	5.22	V
Line Regulation	Vin = 16 V to 40 V	-	5	25	-	5	25	mV
Load Regulation	No Load to Full Load	-	5	25	-	5	25	mV

1. Time for output voltage to settle within 1% of steady-state value.
2. Verified by initial electrical design verification. Post design verification, parameter shall be guaranteed to the limits specified.
3. Derate linearly to 0 at 115°C.
4. Post-RAD limits are within standard limits except where noted.
5. Limited to 36 V for operation in a heavy ion environment at LET ≥ 30 MeV/mg/cm^2 and Tcase = +25 °C

3.2 PERFORMANCE SPECIFICATIONS

Tcase = -55 °C to +105 °C, Vin = +28 V ± 5%, Full Load, Unless Otherwise Specified

		VSC100-2812S			VSC100-2815S			
Parameter	**Conditions**	**Min**	**Typ**	**Max**	**Min**	**Typ**	**Max**	**Units**
INPUT								
Voltage	Continuous	16	28	40[5]	16	28	40[5]	V
	Transient, 1 sec[2]	-	-	50	-	-	50	V
Current	INH < 1.5 V	-	7.5	8	-	7.5	8	mA
	No Load	-	150	300	-	200	350	mA
Ripple Current	20 Hz to 10 MHz	-	-	200	-	-	200	mApp
Undervoltage Lockout	Turn-On	14.5	-	15.8	14.5	-	15.8	V
	Turn-Off[2]	14	-	15	14	-	15	V
OUTPUT STATIC								
Voltage	Tcase = 25 °C	11.82	12	12.18	14.77	15	15.23	V
	Tcase = -55 °C to +105 °C	11.70	12	12.30	14.62	15	15.38	V
Power[3]		0	-	100	0	-	100	W
Current[3]		0	-	8.33	0	-	6.67	A
Ripple Voltage	20 Hz to 10 MHz	-	-	150	-	-	150	mVpp
Line Regulation	Vin = 16 V to 40 V	-	-	20	-	-	20	mV
Load Regulation	No Load to Full Load	-	-	20	-	-	20	mV
Load Fault Power Dissipation	Overload[2]	-	-	24	-	-	24	W
	Short Circuit[2]	-	-	24	-	-	24	W
OUTPUT DYNAMIC								
Load Step, Half to Full Load	Output Transient	-	-	500	-	-	500	mVpk
	Recovery[1]	-	-	300	-	-	300	µs
Line Step[2], Vin = 16 V to 40 V	Output Transient	-	110	300	-	150	300	mVpk
	Recovery[1]	-	-	150	-	20	150	µs
Turn-On, Vin = 0 V to 28 V	Delay	-	3	10	-	3	10	ms
	Overshoot	-	30	50	-	30	50	mVpk
FUNCTION								
INH Pin Input[2]	Output Inhibited	0	-	1.5	0	-	1.5	V
INH Pin Open Circuit Voltage[2]	Output Enabled	10	-	12	10	-	12	V
Voltage Trim Range		-20	-	10	-20	-	10	%
SHARE Pin Voltage[2]		0	-	10	0	-	10	V
Current Share Accuracy[2]		-	5	-	-	5	-	%
SYNC Frequency Range	V_H - V_L = 5 V, D = 20-80%	300	-	380	300	-	380	kHz
GENERAL								
Efficiency		85	88	-	86	89	-	%
Capacitive Load[2]		-	-	500	-	-	500	µF
Switching Frequency		300	340	380	300	340	380	kHz
Isolation	500 V DC, Tcase = 25 °C	100	-	-	100	-	-	MΩ
Weight		-	-	79	-	-	79	g
MTBF (MIL-HDBK-217F)	SF @ Tcase = 55 °C	-	12.2	-	-	12.2	-	MHr
POST-RAD LIMITS[4]								
Output Voltage	Tcase = -55 °C to +105 °C	11.46	12	12.54	14.32	15	15.68	V
Line Regulation	Vin = 16 V to 40 V	-	10	25	-	10	25	mV
Load Regulation	No Load to Full Load	-	5	25	-	5	25	mV

1. Time for output voltage to settle within 1% of steady-state value.
2. Verified by initial electrical design verification. Post design verification, parameter shall be guaranteed to the limits specified.
3. Derate linearly to 0 at 115°C.
4. Post-RAD limits are within standard limits except where noted.
5. Limited to 36 V for operation in a heavy ion environment at LET ≥ 30 MeV/mg/cm^2 and Tcase = +25 °C

3.2 PERFORMANCE SPECIFICATIONS

Tcase = -55 °C to +105 °C, Vin = +28 V ± 5%, Full Load, Unless Otherwise Specified

		VSC100-2828S			
Parameter	**Conditions**	**Min**	**Typ**	**Max**	**Units**
INPUT					
Voltage	Continuous	16	28	40	V
	Transient, 1 sec[2]	-	-	50	V
Current	INH < 1.5 V	-	7.5	8	mA
	No Load	-	90	150	mA
Ripple Current	20 Hz to 10 MHz	-	150	250	mApp
Undervoltage Lockout	Turn-On	14.5	-	15.8	V
	Turn-Off[2]	14	-	15	V
OUTPUT STATIC					
Voltage	Tcase = 25 °C	27.44	28	28.56	V
	Tcase = -55 °C to +105 °C	27.16	28	28.84	V
Power[3]		0	-	100	W
Current[3]		0	-	3.57	A
Ripple Voltage	20 Hz to 10 MHz	-	100	250	mVpp
Line Regulation	Vin = 16 V to 40 V	-	150	400	mV
Load Regulation	No Load to Full Load	-	100	200	mV
Load Fault Power Dissipation	Overload[2]	-	-	24	W
	Short Circuit[2]	-	-	28	W
OUTPUT DYNAMIC					
Load Step, Half to Full Load	Output Transient	-	-	1000	mVpk
	Recovery[1]	-	-	300	µs
Line Step[2], Vin = 16 V to 40 V	Output Transient	-	200	1000	mVpk
	Recovery[1]	-	-	100	µs
Turn-On, Vin = 0 V to 28 V	Delay	-	5	10	ms
	Overshoot	-	0	50	mVpk
FUNCTION					
INH Pin Input[2]	Output Inhibited	0	-	1.5	V
INH Pin Open Circuit Voltage[2]	Output Enabled	10	-	12	V
Voltage Trim Range		-20	-	10	%
SHARE Pin Voltage[2]		0	-	10	V
Current Share Accuracy[2]		-	5	-	%
SYNC Frequency Range	V_H - V_L = 5 V, D = 20-80%	300	-	380	kHz
GENERAL					
Efficiency		83	86	-	%
Capacitive Load[2]		-	-	500	µF
Switching Frequency		300	340	380	kHz
Isolation	500 V DC, Tcase = 25 °C	100	-	-	MΩ
Weight		-	-	79	g
MTBF (MIL-HDBK-217F)	SF @ Tcase = 55 °C	-	12.2	-	MHr
POST-RAD LIMITS[4]					
Output Voltage	Tcase = -55 °C to +105 °C	26.07	28	29.2	V
Line Regulation	Vin = 16 V to 40 V	-	150	500	mV
Load Regulation	No Load to Full Load	-	100	250	mV

1. Time for output voltage to settle within 1% of steady-state value.
2. Verified by initial electrical design verification. Post design verification, parameter shall be guaranteed to the limits specified.
3. Derate linearly to 0 at 115°C.
4. Post-RAD limits are within standard limits except where noted.

4.0 PERFORMANCE CURVES

4.1.1 VSC100-283R3S Efficiency (Typical, 25 °C)

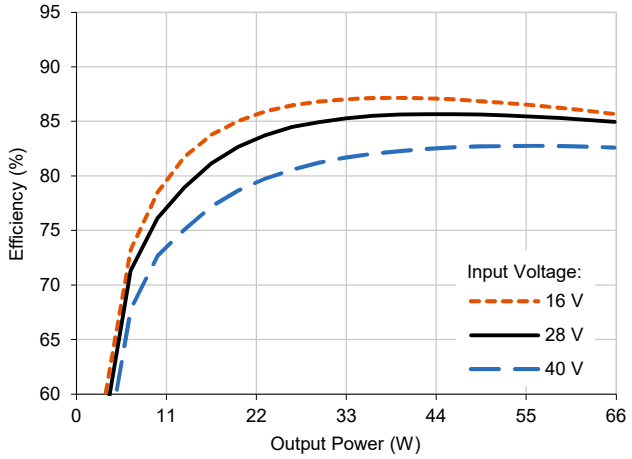

4.1.2 VSC100-2805S Efficiency (Typical, 25 °C)

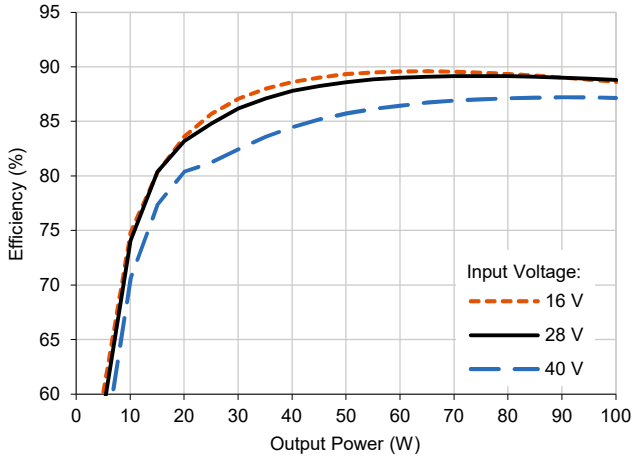

4.1.3 VSC100-2812S Efficiency (Typical, 25 °C)

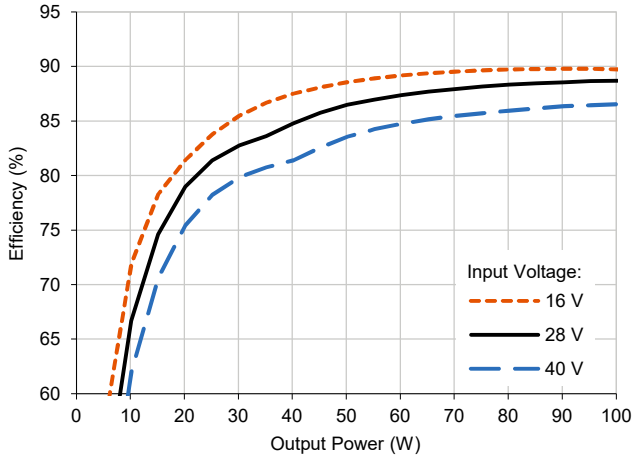

4.1.4 VSC100-2815S Efficiency (Typical, 25 °C)

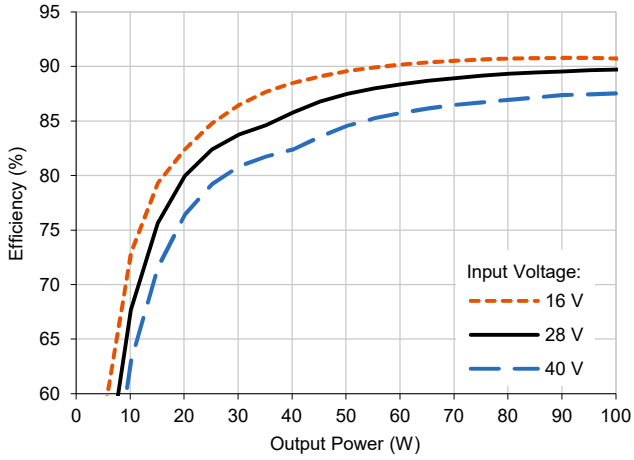

4.1.5 VSC100-2828S Efficiency (Typical, 25 °C)

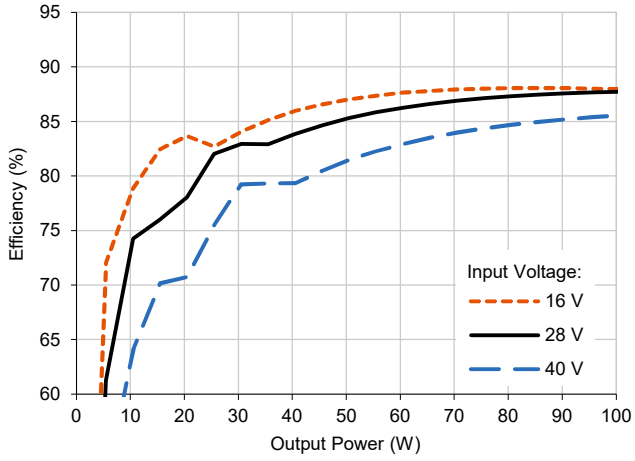

5.0 MECHANICAL OUTLINES AND PINOUT

Standard Package Option:

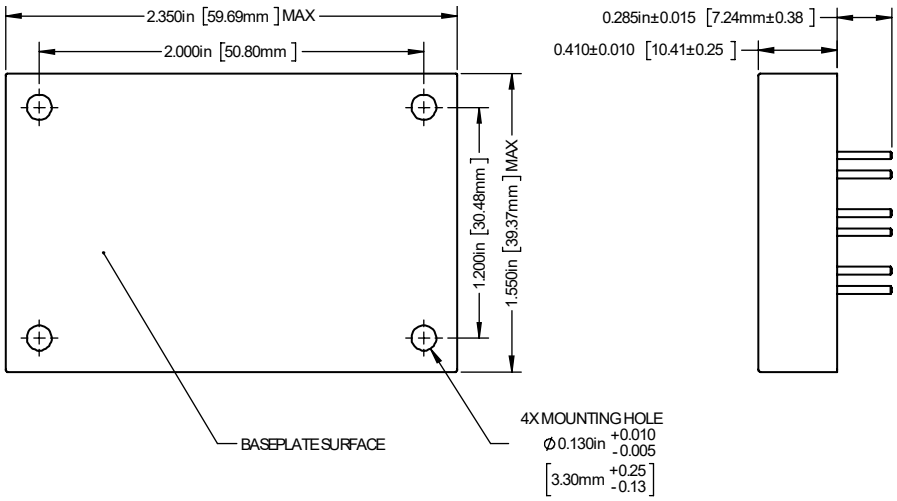

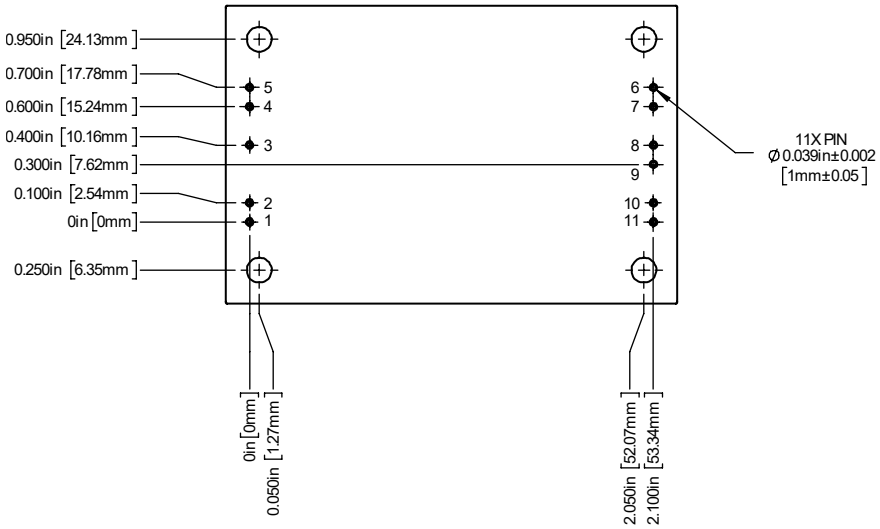

1. Tolerances are ±0.005" unless otherwise stated
2. Case temperature is measured on the center of the baseplate surface
3. Mounting holes are not threaded. Recommended fastener is 4-40
4. Materials: Body (Epoxy); Pin (Tellurim Copper, alloy 145, gold over nickel plating)

Pin	Function	Pin	Function
1	28VIN	7	-SENSE
2	SYNC	8	TRIM
3	CASE	9	SHARE
4	INCOM	10	+SENSE
5	INHIBIT	11	+VOUT
6	OUTCOM		

6.0 TECHNICAL NOTES

Please note that many of these functions are also demonstrated in detail on the VPT website in the form of technical video labs.

6.1 GENERAL INFORMATION

6.1.1 Topology Description

The VSC100-2800S Series is an isolated single-output forward converter. It operates over a wide input voltage range and provides a regulated positive output voltage with respect to the OUTCOM pin.

6.1.2 External Components

The VSC100-2800S Series is designed to operate stand-alone in most applications. It does not require any external components for proper operation or to meet the datasheet specifications. Input and output L-C filters are provided internally for low ripple and noise. To further reduce output ripple and noise, a small ceramic capacitor, 1 µF to 10 µF, can be added at the output. Most application specific ripple requirements can be met with the addition of output capacitors alone. External output capacitance can be added up to the maximum listed in Section 3.2.

6.1.3 Source Impedance

The impedance of the 28 V input source can interact with the DC-DC converter and can affect performance. High source impedance is often caused by a long input cable or components added in series with the input. Source resistance will cause a DC voltage drop as the converter draws DC input current. This voltage drop is simply the cable resistance multiplied by the input current at low line. The voltage drop and the actual voltage at the input to the converter will determine the minimum source voltage at which the converter will operate. A high source inductance can interact with the feedback control loop of the converter. VPT's EMI filters will usually isolate the source and eliminate this problem. In some cases, additional input capacitance will be needed to stabilize the system.

6.1.4 Output Configurations

Since the converter is isolated, the output can be configured as a positive or negative voltage. For example, the VSC100-2812S can provide +12 V DC referenced to OUTCOM or -12 V referenced to +VOUT.

The outputs of multiple converters can be stacked in series to provide higher voltages. When outputs of multiple modules are stacked, they naturally share the load. For example, two VSC100-2812S converters can be stacked to provide a 24 V output at 200 W.

6.2 FUNCTION DESCRIPTIONS

6.2.1 On/Off Control (Inhibit)

The INH (Inhibit) pin is a primary-side control pin referenced to INCOM. The INH pin must be driven using an open collector or open drain configuration. Pulling the INH pin low disables the converter output, removes bias voltage from internal control circuitry, and puts the converter in a state of minimum input current draw. Leaving INH open enables the output, allowing the converter to operate normally. The pin must be pulled below 1.5 V to disable the output. An optional capacitor from INH to INCOM may be used to delay turn-on. The INH pin should be left open if not used.

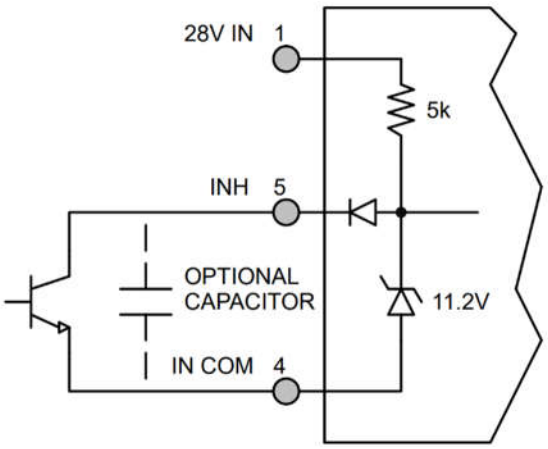

6.2.2 Adjusting the Output Voltage (TRIM)

The output voltage set point of the converter can be adjusted using the TRIM pin. To adjust the output up, connect the trim resistor from TRIM to OUTCOM. To adjust the output down, connect the trim resistor from TRIM to +VOUT. The maximum trim range is -20% and +10% from nominal. The appropriate resistor values versus the output voltage are given in the table below. Because the TRIM pin can be sensitive to external noise, the trim resistor should be physically located close to the VSC100-2800S converter with short interconnects. The TRIM pin should be left open if not used. When adjusting the output voltage, do not exceed the rated total output power or output current. The VSC100-2828S uses a 2.5 V trim reference instead of 0.75 V.

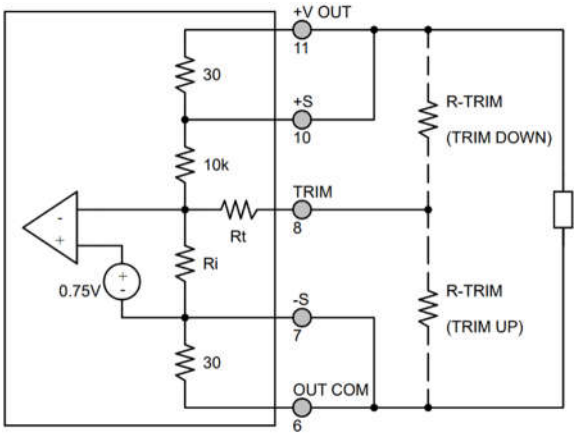

VSC100-283R3S		VSC100-2805S		VSC100-2812S		VSC100-2815S		VSC100-2828S	
+Vout (V)	Rtrim (Ω)	+ Vout (V)	Rtrim (Ω)	+ Vout (V)	Rtrim (Ω)	+ Vout (V)	Rtrim (Ω)	+ Vout (V)	Rtrim (Ω)
3.60	3.94k	5.5	980	13.2	1.14k	16.5	686	30.50	7.68k
3.55	8.92k	5.4	4.72k	13.0	2.39k	16.25	1.69k	30.00	10.2k
3.50	16.4k	5.3	10.9k	12.8	4.26k	16	3.19k	29.50	14.3k
3.45	28.8k	5.2	23.4k	12.6	7.39k	15.75	5.7k	29.00	22.6k
3.40	53.5k	5.1	60.5k	12.4	13.6k	15.5	10.7k	28.50	47.5k
3.35	127k	5.0	--	12.2	32.4k	15.25	25.9k	28.00	--
3.30	--	4.9	404k	12.0	--	15	--	27.50	499k
3.25	486k	4.8	189k	11.8	548k	14.75	552k	27.00	243k
3.20	226k	4.7	118k	11.6	266k	14.5	270k	26.50	158k
3.15	140k	4.6	82.4k	11.4	172k	14.25	175k	26.00	116k
3.10	96.9k	4.5	61.1k	11.2	126k	14	128k	25.50	89.8k
3.05	71.3k	4.4	46.9k	11.0	97.4k	13.75	99.5k	25.00	73.2k
3.00	54.2k	4.3	36.8k	10.8	78.6k	13.5	80.6k	24.50	61.2k
2.95	42k	4.2	29.2k	10.6	65.3k	13.25	67k	24.00	51.7k
2.90	32.8k	4.1	23.3k	10.4	55.2k	13	56.9k	23.50	44.8k
2.85	25.7k	4.0	18.5k	10.2	47.4k	12.75	49k	23.00	38.8k
2.80	20.1k			10.0	41.1k	12.5	42.6k	22.50	34.4k
2.75	15.4k			9.8	36k	12.25	37.5k		
2.70	11.5k			9.6	31.8k	12	33.2k		
2.65	8.26k								

6.3 PROTECTION FEATURES

6.3.1 Input Undervoltage Lockout

The VSC100-2800S Series provides input undervoltage lockout protection. For input voltages below the turn-on voltage, the converter will remain off, drawing minimal current from the source. When the input voltage exceeds the turn-on voltage, the converter will start. The lockout circuit is designed to tolerate slow ramping input voltage waveforms.

6.3.2 Output Soft Start

The VSC100-2800S Series utilizes an output soft-start function to ramp the output in a controlled manner, eliminating output voltage overshoot and limiting inrush current at turn on. A voltage-mode soft-start ensures the output waveform remains consistent regardless of changes in the load current. The output rise time is approximately 3 ms, excluding the VSC100-2828S which is 5 ms. The soft-start function is active whether the module is turned on with an application of input voltage or from release of the inhibit pin. Under normal conditions, current drawn from the source during turn-on will not exceed the full-load input current. The turn-on delay time is specified from the application of input voltage (or release of the inhibit pin) until the output reaches 90% of its final value.

6.3.3 Output Overcurrent Protection

The VSC100-2800S Series provides output overcurrent and output short circuit protection. During a load fault condition, a constant output current control circuit reduces the converter duty cycle to limit the output current to approximately 135% of its rated value. The converter will continue to provide constant current into any overload or short circuit condition. This feature allows the converter to start into any capacitive load. Recovery is automatic and immediate upon removal of the fault condition. Sustained short circuit or overload operation can cause excessive power dissipation. Care should be taken to control the operating temperature of the converter in this condition.

6.4 THERMAL CONSIDERATIONS

The VSC100-2800S Series is rated for full power operation at 105 °C. Operation above 105 °C is allowed at reduced power. Specifically, the output power should be derated linearly from full power at 105 °C to half power at 110 °C and to zero power at 115 °C. The operating temperature of the converter is specified on the baseplate or the top plate of the converter. The converter is designed to be conduction-cooled, with the baseplate or the top plate mounted to a heat sink, chassis, PCB or other thermal surface.

The DC-DC converter contains many semiconductor components. The maximum temperature rise from junction to case is 21 °C at full load.

6.5 RADIATION HARDNESS ASSURANCE

VPT takes a conservative approach to radiation testing to ensure product performance in a space environment. VPT's internal Space COTS Radiation Hardness Assurance (RHA) plan documents VPT's processes and procedures for assuring the performance of VPT Space COTS products under various environmental conditions in space including Total Ionizing Dose (TID) and Single-Event Effects (SEE). Additionally, the converters were characterized for Enhanced Low Dose Rate Sensitivity (ELDRS) by testing samples at 50 mrad(Si)/s to 30 krad(Si). Radiation tolerance is assured by a combination of both module-level characterization and sample HDR TID testing of sequestered lots of all sensitive semiconductor piece-parts used within the module.

6.5.1 Radiation Test and Performance Levels

Radiation Environment		Piece Part RLAT	Module-Level Characterization
Total Ionizing Dose (TID)	High Dose Rate (HDR)	30 krad(Si)	30 krad(Si)
	Low Dose Rate (LDR)	---	30 krad(Si)
Single-Event Effects (SEE)	Destructive (SEB, SEGR, SEL)	Not applicable	≥ 42 MeV/mg/cm^2
	Non-Destructive (SET, SEU, SEFI)	Not applicable	≥ 30 MeV/mg/cm^2

6.5.2 RHA Plan Summary

Test	RHA Plan for VSC Series Isolated DC-DC Converters
Total Ionizing Dose (TID):	Sensitive semiconductor components undergo RLAT to 40 krad(Si) per MIL-STD-883 Method 1019. Converters are characterized to 30 krad(Si).
Enhanced Low Dose Rate Sensitivity (ELDRS):	Converters were tested at 50 mrad(Si)/s up to 30 krad(Si).
Single Event Effects (SEE):	Converters are characterized to LET ≥ 42 MeV/mg/cm^2 for catastrophic events (SEL, SEB, SEGR) and to LET ≥ 30 MeV/mg/cm^2 for transients (SET) and functional interrupts (SEFI) under heavy ion exposure.
Radiation Lot Acceptance Testing (RLAT):	All production lots of sensitive semiconductor components undergo a sample test for TID at HDR.

7.0 ENVIRONMENTAL SCREENING

Test	/ES+
Internal Visual	IPC-A-610, Class 3
Temperature Cycling	MIL-STD-883, Method 1010, Condition B, -55 °C to +125 °C, 10 Cycles
Burn In	96 hours at +105 °C
Final Electrical[1]	-55 °C, 25 °C, 105 °C
External Visual	Internal Procedure

1. 100% R&R testing with all test data included in product shipment

8.0 ORDERING INFORMATION

VSC100-	28	05	S	/ES+
1	2	3	4	5

(1) Product Series	(2) Nominal Input Voltage	(3) Output Voltage	(4) Number of Outputs	(5) Screening Code
VSC100-	**28** 28 Volts	**3R3** 3.3 Volts **05** 5 Volts **12** 12 Volts **15** 15 Volts **28** 28 Volts	**S** Single	/ES+

Please contact your sales representative or the VPT Inc. Sales Department for more information concerning additional environmental screening and testing, different input voltage, output voltage, power requirements, and source inspection.

9.0 CONTACT INFORMATION

To request a quotation or place orders please contact your sales representative or the VPT, Inc. Sales Department at:

Phone: (425) 353-3010
Fax: (425) 353-4030
E-mail: vptsales@vptpower.com

All information contained in this datasheet is believed to be accurate, however, no responsibility is assumed for possible errors or omissions. The products or specifications contained herein are subject to change without notice.

10.0 ADDITIONAL INFORMATION

Visit the VPT website for additional technical resources, including:

Product Catalogs

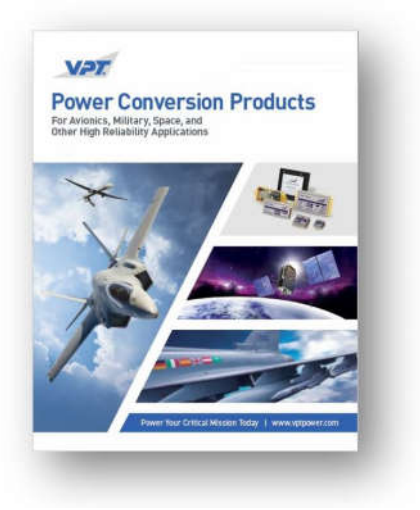

Application Notes and White Papers

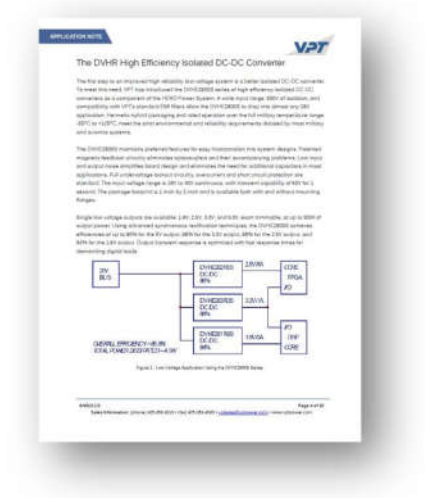

Technical Video Labs

Additional Products For Avionics/Military, Hi-Rel COTS, and Space Applications