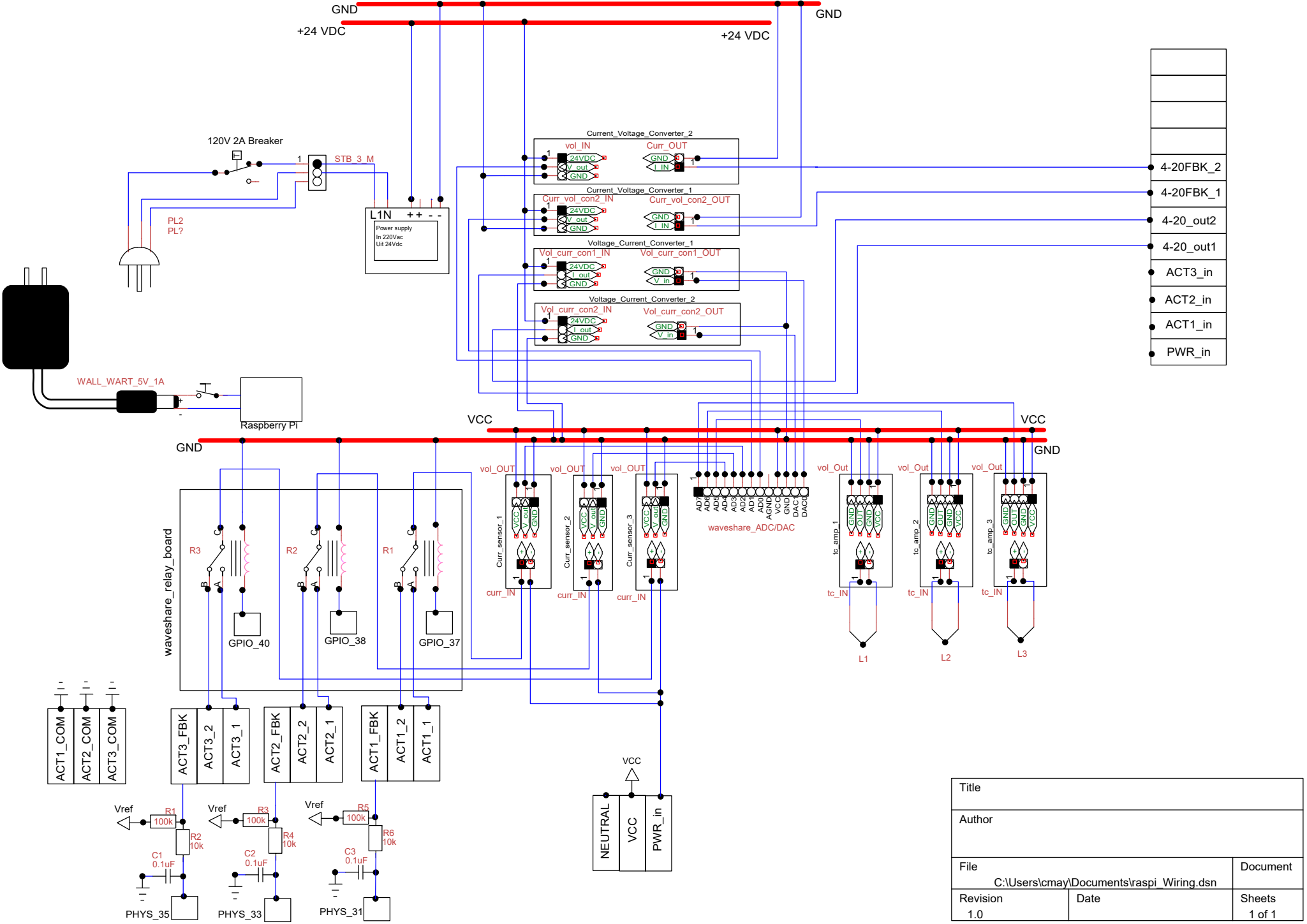

Title		
Author		
File C:\Users\cmay\Documents\raspi_Wiring.dsn		Document
Revision 1.0	Date	Sheets 1 of 1