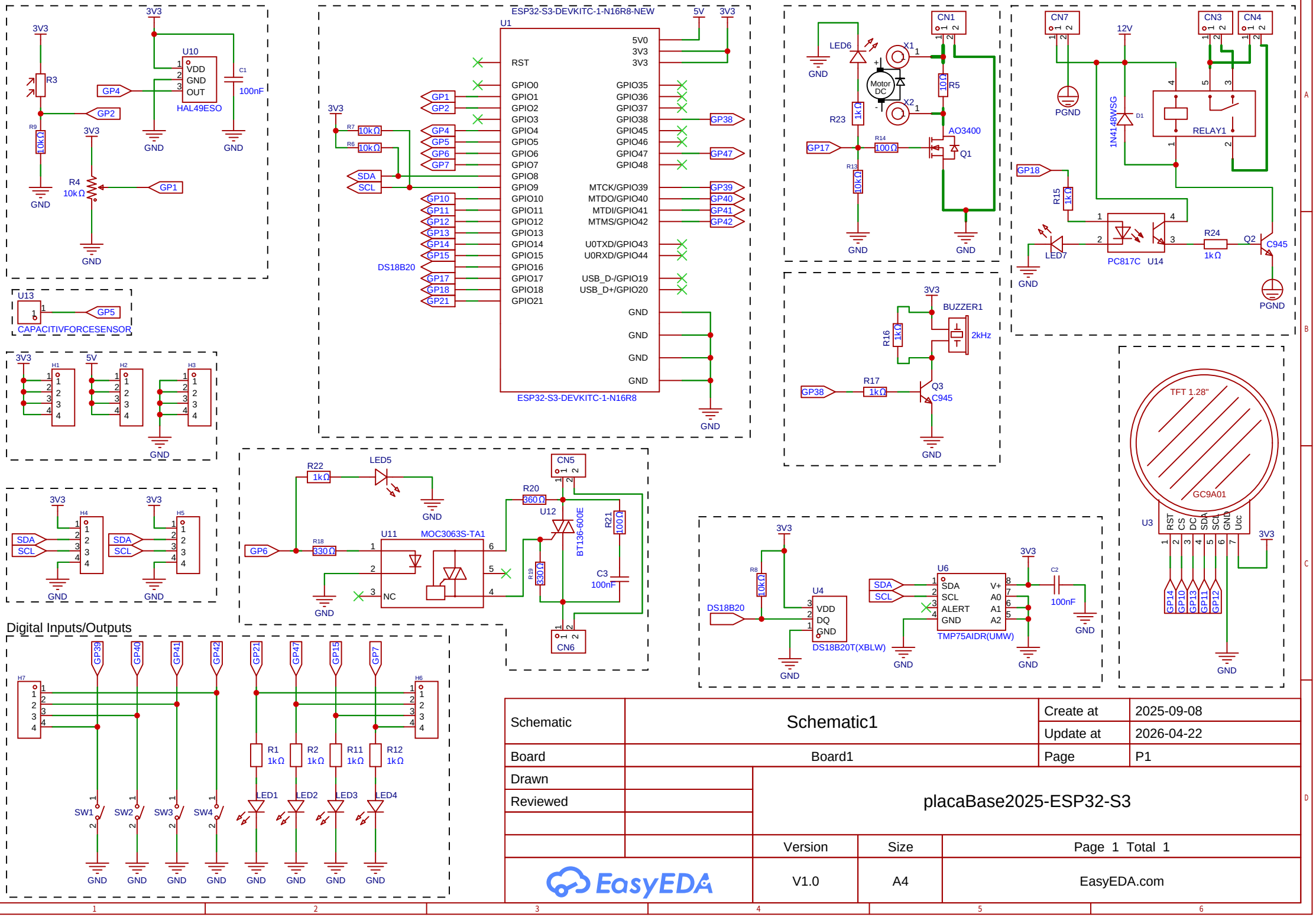

Schematic	Schematic1	Create at	2025-09-08
		Update at	2026-04-22
Board	Board1	Page	P1
Drawn		placaBase2025-ESP32-S3	
Reviewed			
		Version	Size	Page 1 Total 1
EasyEDA		V1.0	A4	EasyEDA.com