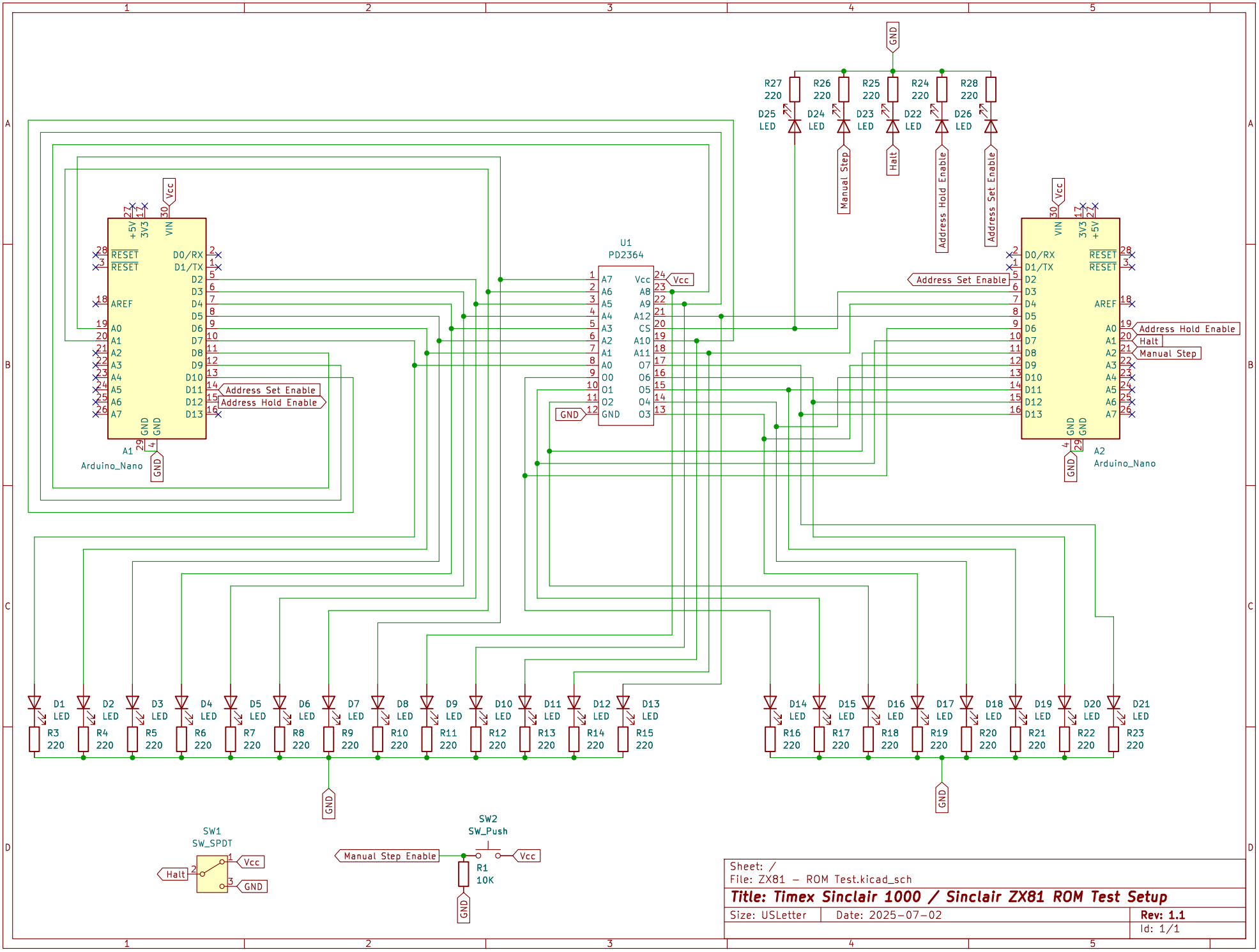

Sheet: /
File: ZX81 – ROM Test.kicad_sch

Title: Timex Sinclair 1000 / Sinclair ZX81 ROM Test Setup

Size: USLetter	Date: 2025-07-02	Rev: 1.1
		Id: 1/1