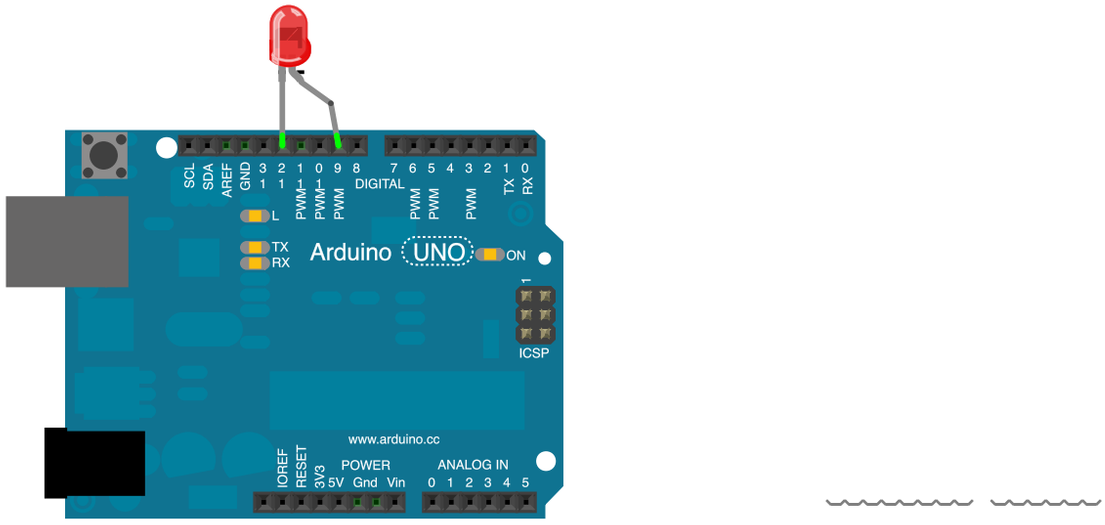

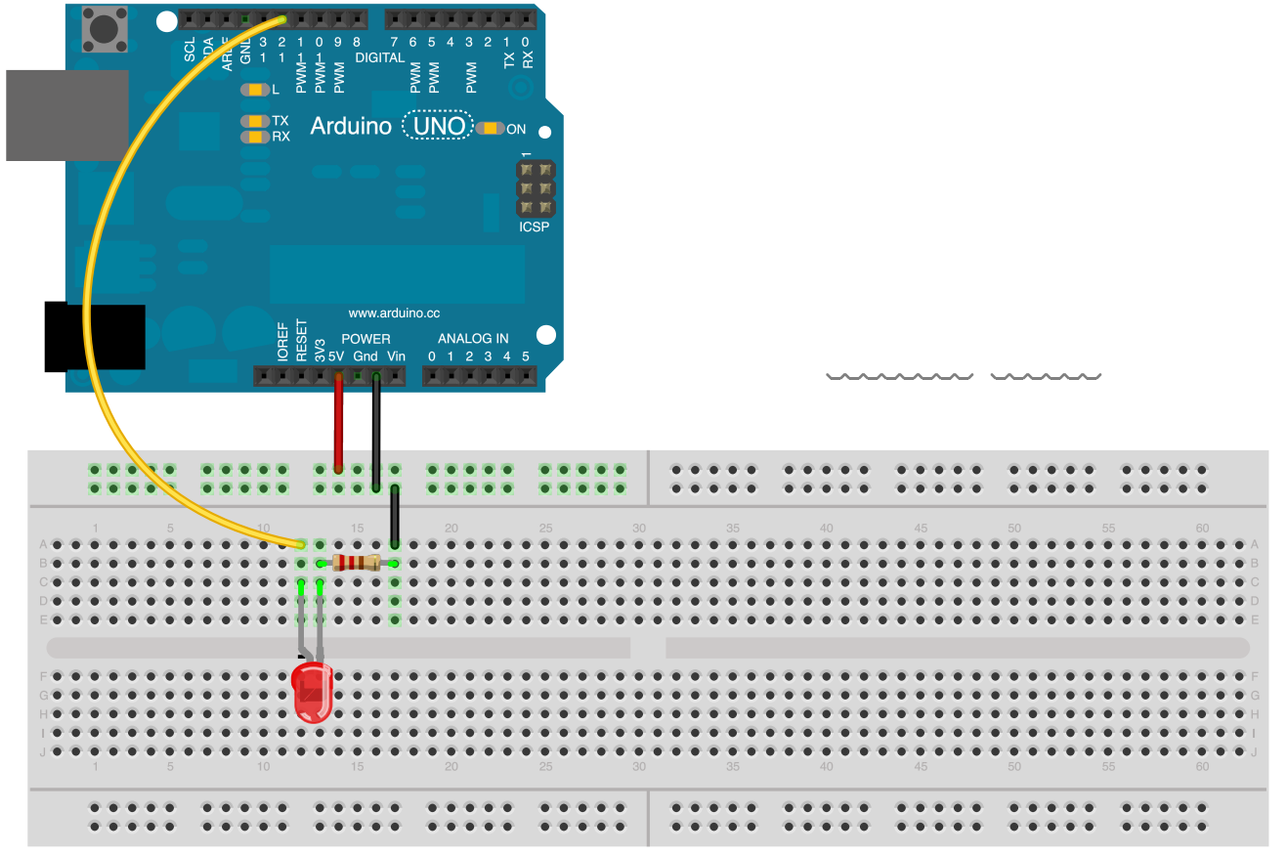

Made with Fritzing.org

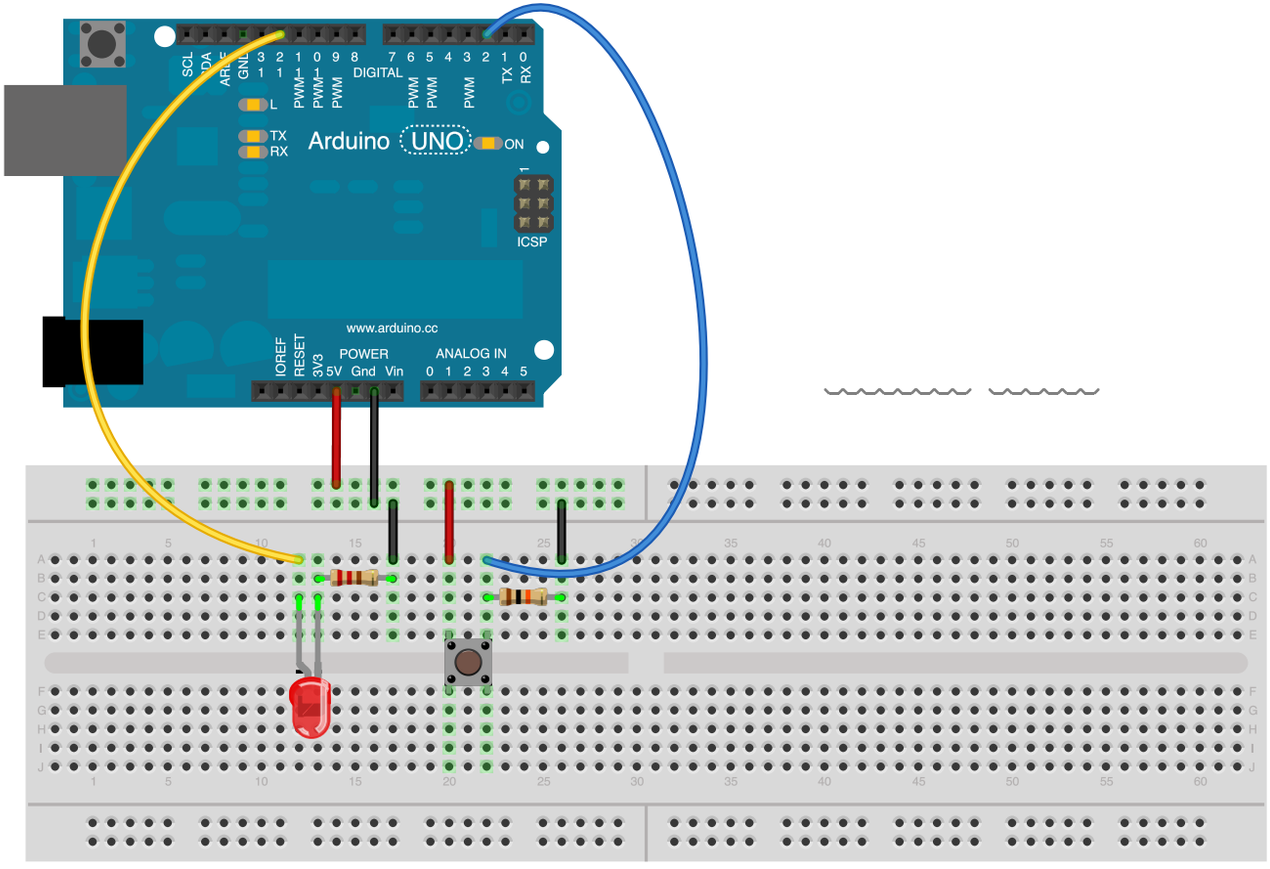

Made with Fritzing.org

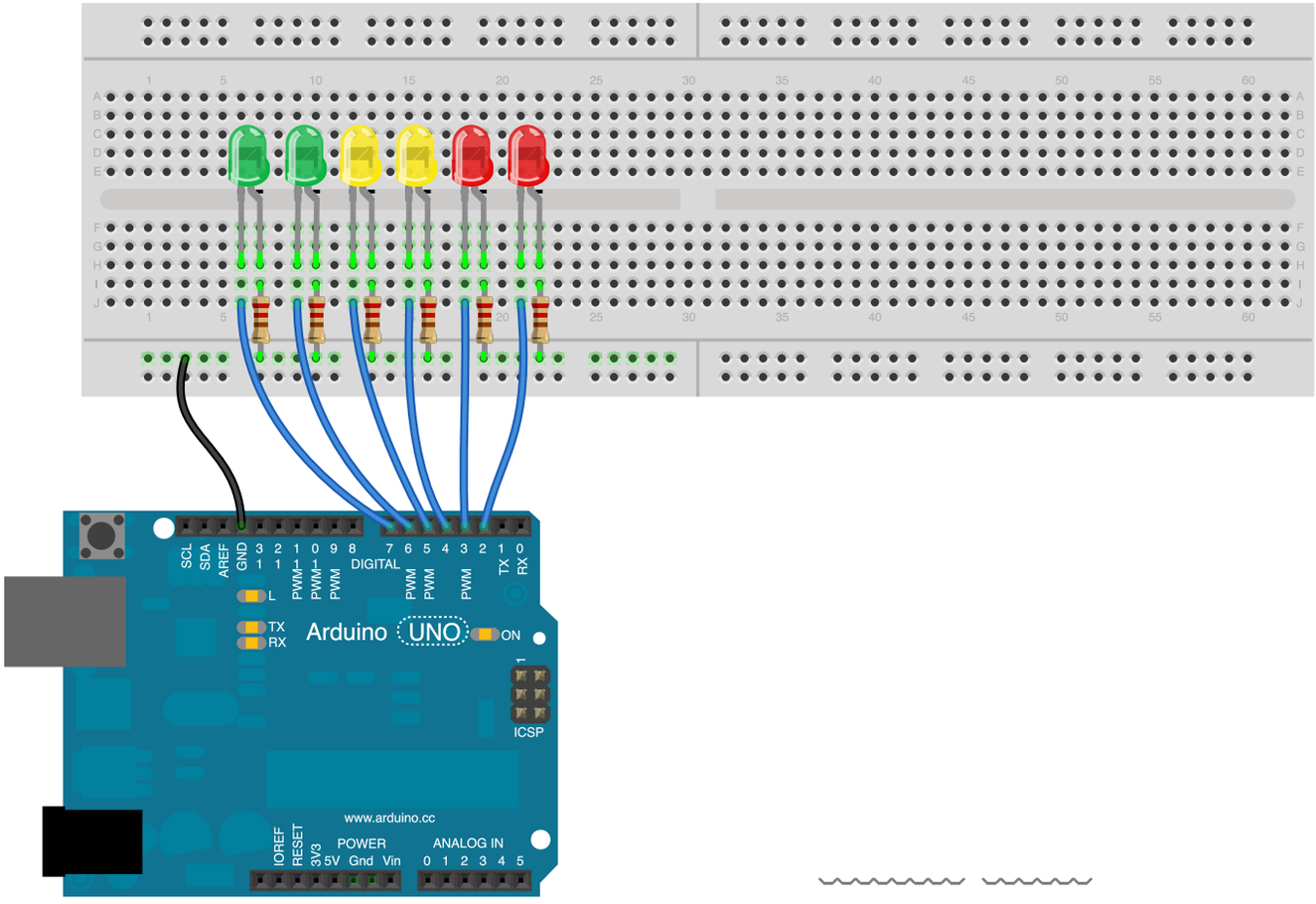

Made with Fritzing.org

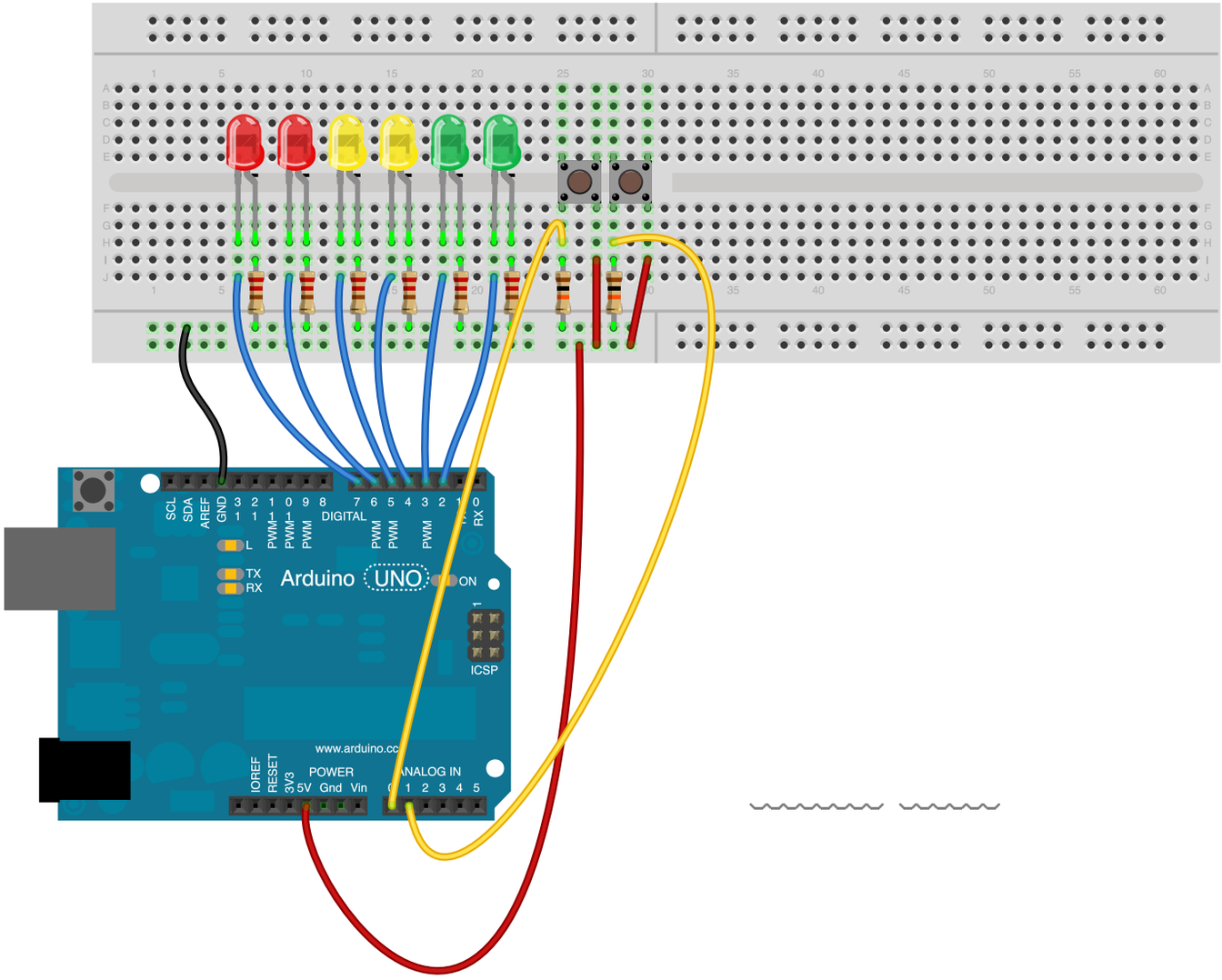

Made with Fritzing.org

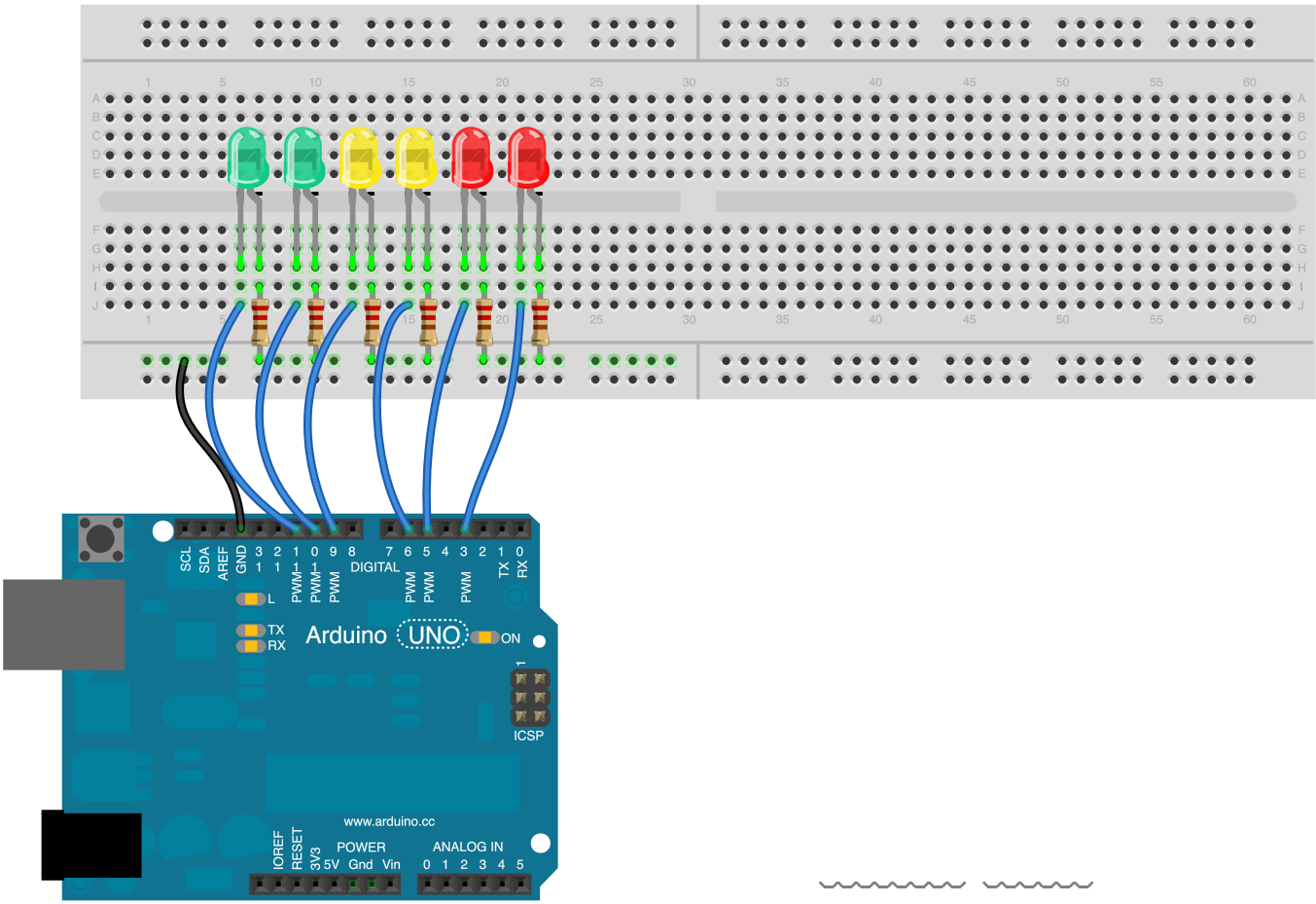

Made with Fritzing.org

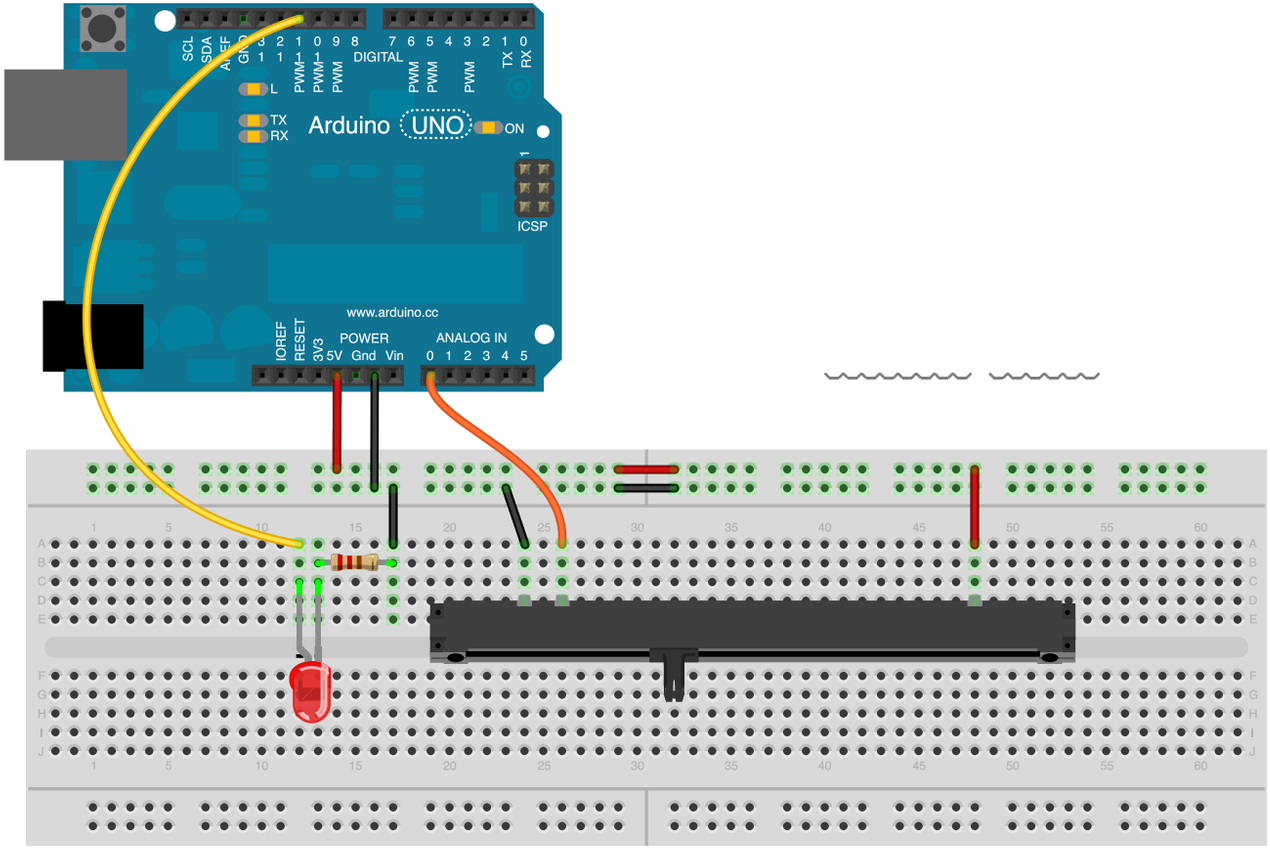

Made with Fritzing.org

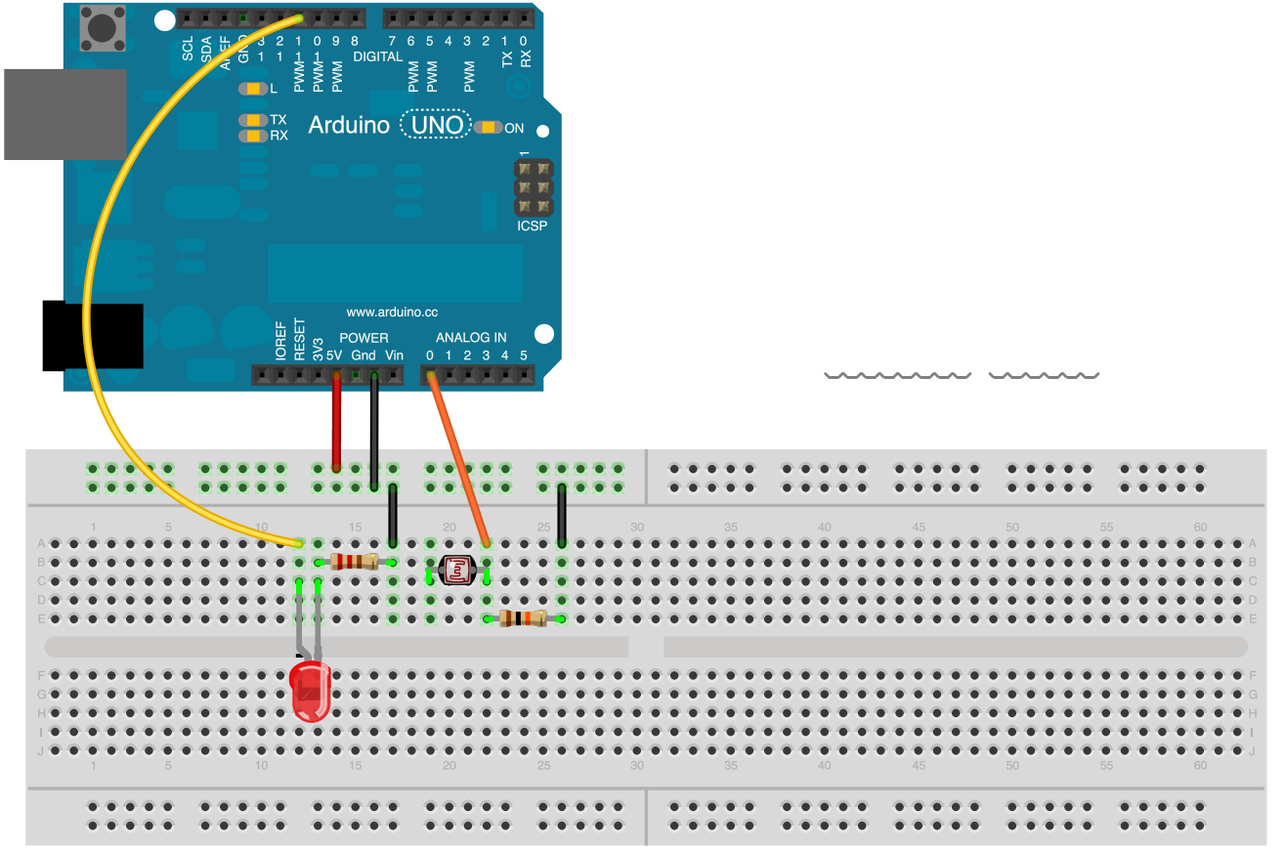

Made with Fritzing.org

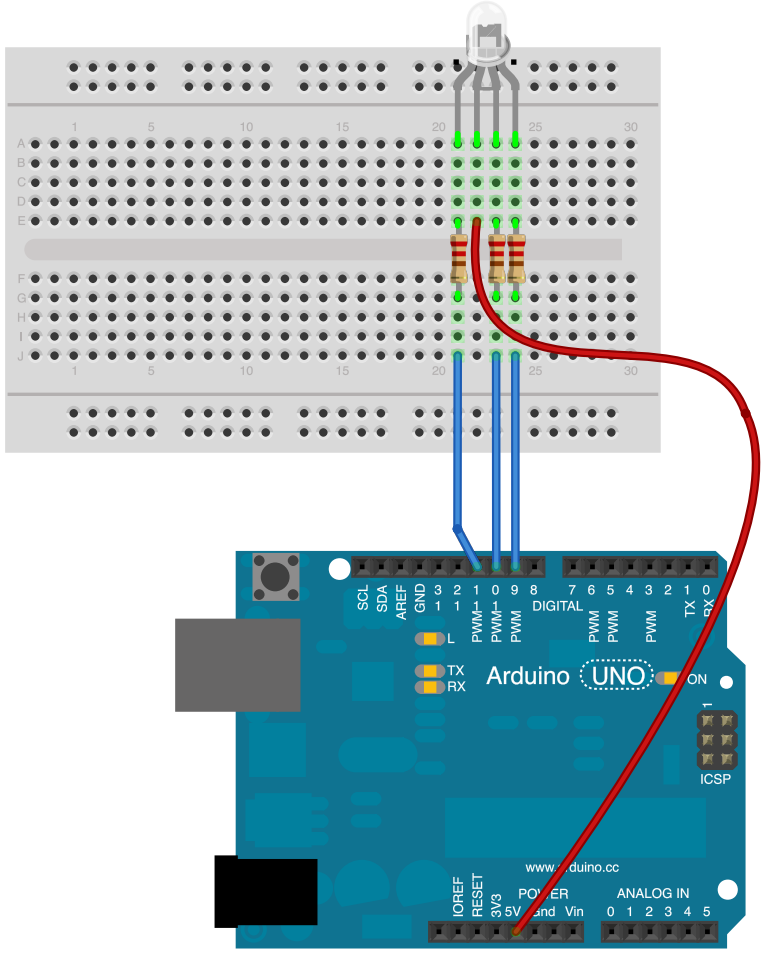

Made with Fritzing.org

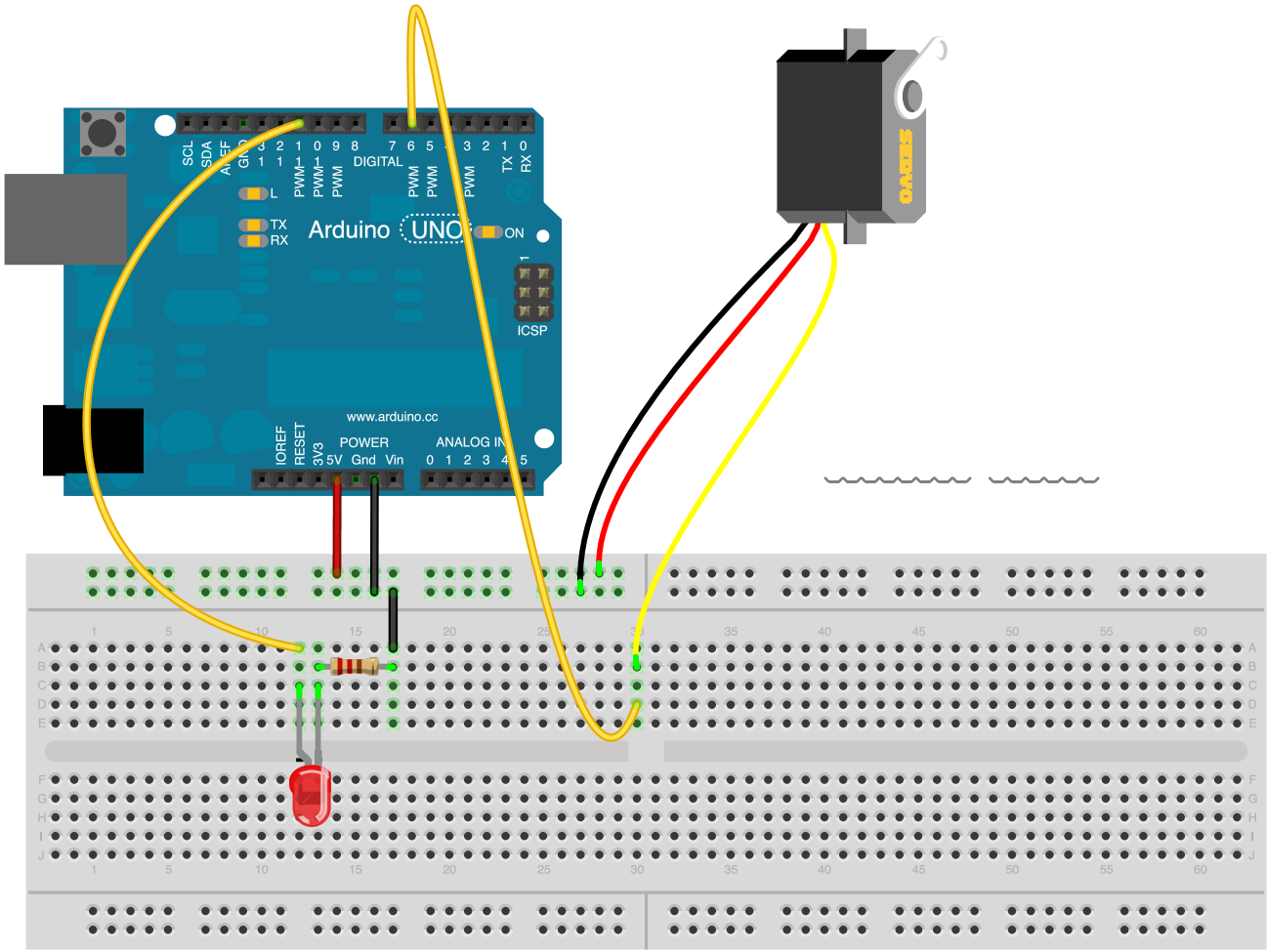

Made with Fritzing.org

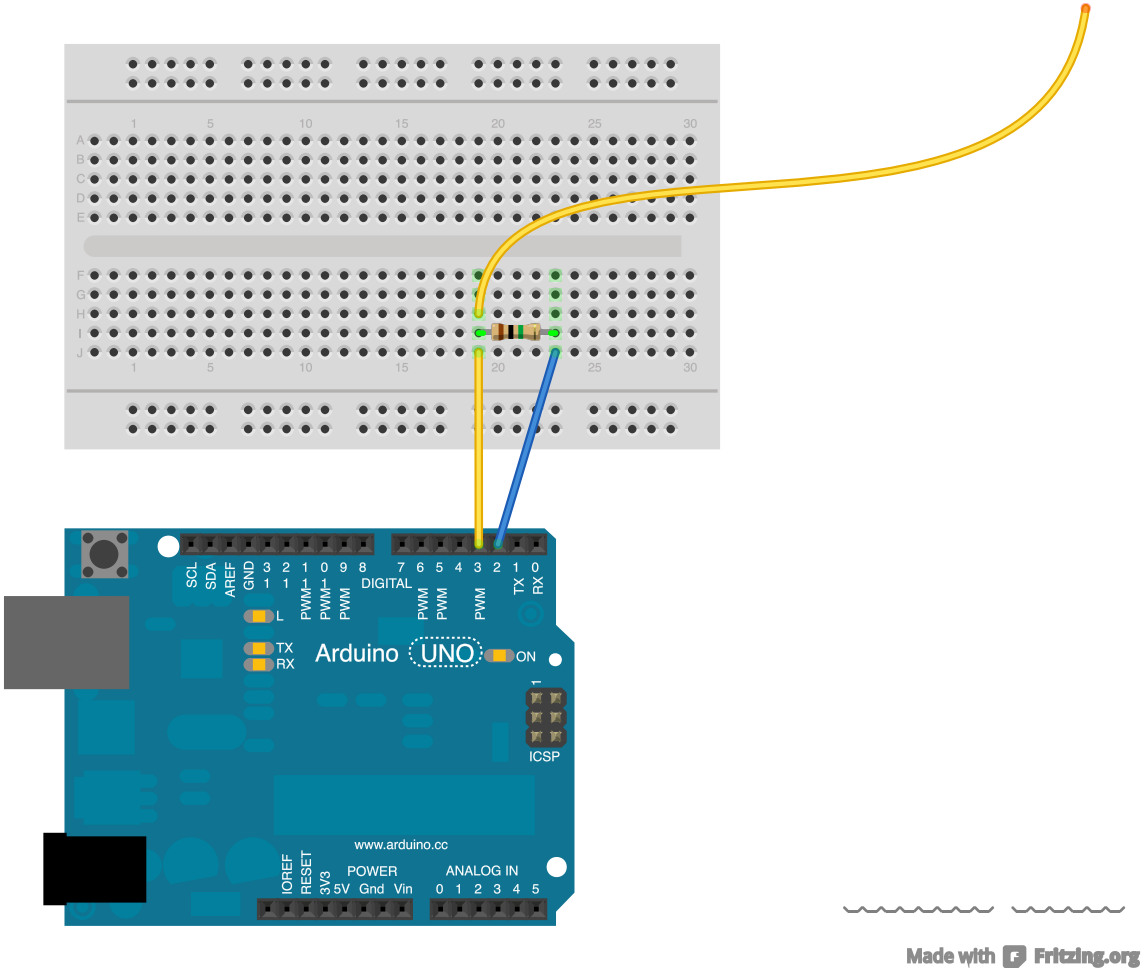
SCL
SDA
AREF
GND
3 2 1 0
1 1
PWM~
PWM~
PWM
DIGITAL
7 6 5 4 3 2 1 0
PWM
PWM
PWM
TX
RX
L
TX
RX
Arduino
UNO
ON
ICSP
www.arduino.cc
IOREF
RESET
3V3
5V
POWER
Gnd
Vin
ANALOG IN
0 1 2 3 4 5
Made with Fritzing.org