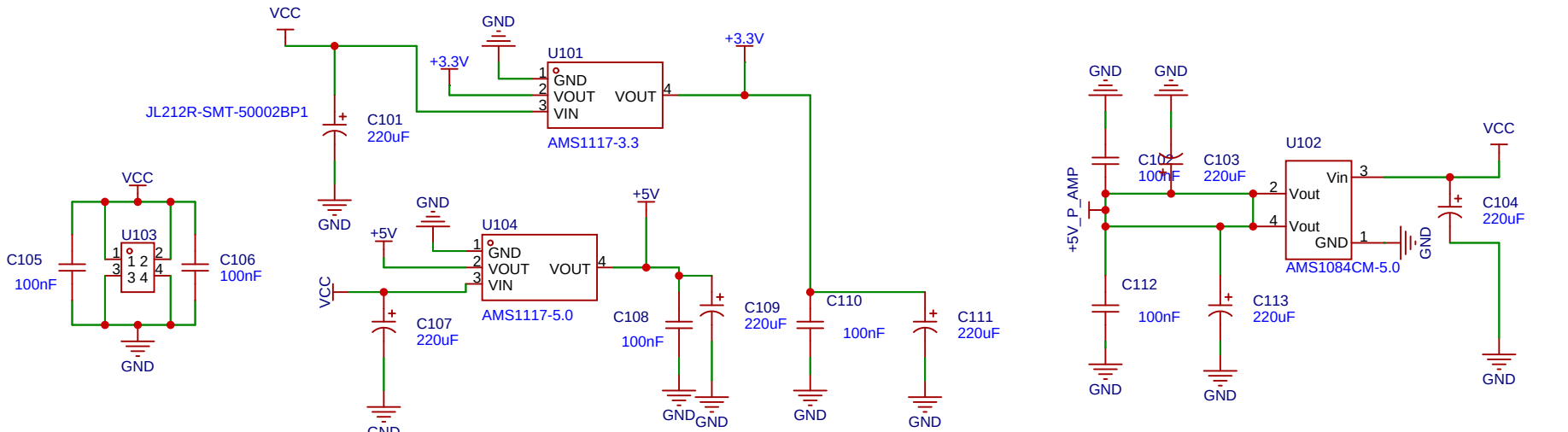

RF → LC preselector → LNA → Mixer1(→10.7MHz) → 10.7MHz filter → Mixer2(→455kHz) → 455kHz filter → AM detector → Audio amp

Alle komponenter svarer til LCSC Part numre fra sidste ordre

Layout is made for 1XTW6000MAA (DSB321SDN) TCXO

Det skal kontrolleres om kredsløbet svarer til Theonethatiwant, clockosc gør, men hvad med resten?

Komponenter svarer til oprindeligt schematic.

Skal decoupling fortsætte som den er nu? Eller simplificeres?

SDA_3V
Pull-up resistors @ 1k enable fast I2

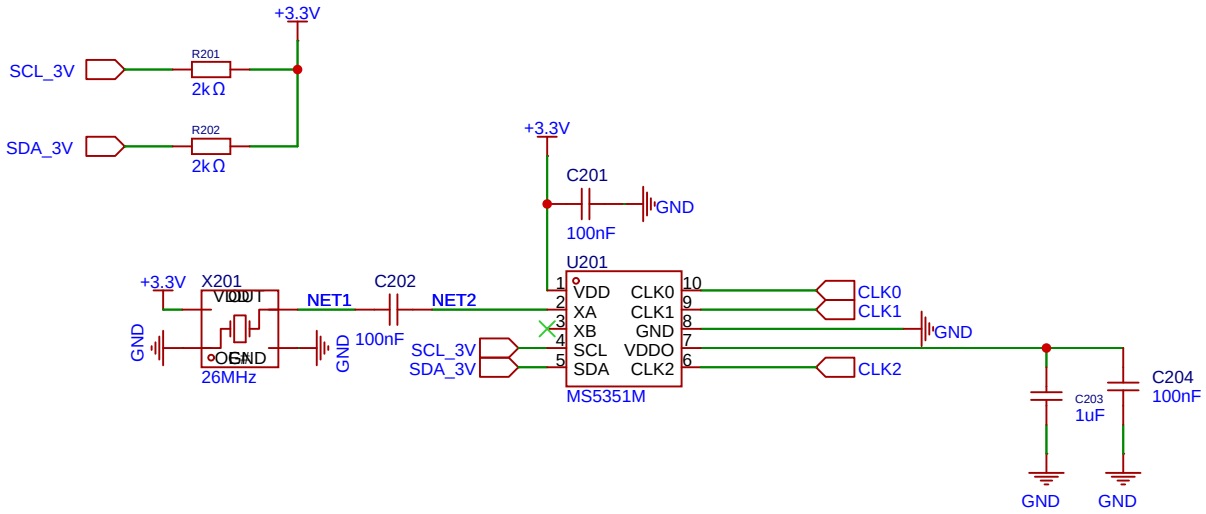

Det skal kontrolleres om kredsløbet svarer til Theonethatiwant, clockosc gør, men hvad med resten?

Schematic	SI5351_TCXO_WithMixerAndFilters	Create at	2025-08-31
		Update at	2026-03-28
Board	SI5351_TCXO_WithMixerAndFilters	Page	SI5351_TCXO
Drawn		SCH_SI5351_TCXO_WithMixerAndFilters_2025-08-07	
Reviewed			
		Version	Size	Page 2 Total 12
EasyEDA		V1.0	A4	EasyEDA.com

RF_Filter er blevet justeret sammen med Claude.
Næste led er RF_LNA
Tilføjet ESD beskyttelse på RF_ANT, med ESD diode.
Impedans matching bør være ok som det er nu.

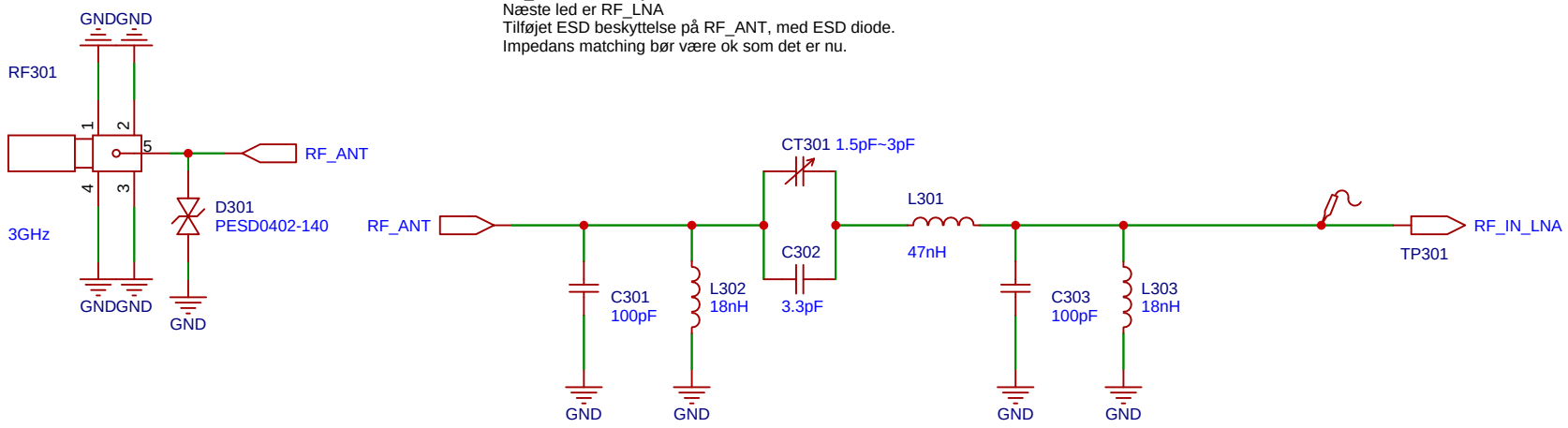

Schematic	SI5351_TCXO_WithMixerAndFilters	Create at	2025-08-31
		Update at	2026-03-28
Board	SI5351_TCXO_WithMixerAndFilters	Page	RF_FILTER
Drawn		SCH_SI5351_TCXO_WithMixerAndFilters_2025-08-07	
Reviewed			
		Version	Size	Page 3 Total 12
EasyEDA		V1.0	A4	EasyEDA.com

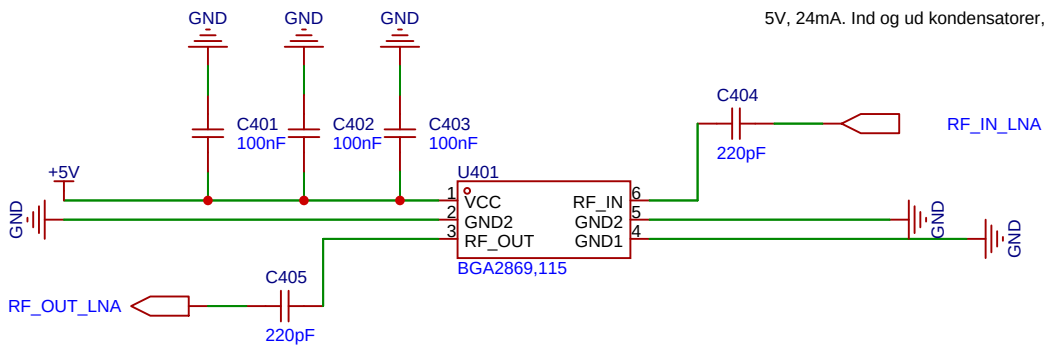

5V, 24mA. Ind og ud kondensatorer, samt decoupling.

Er decoupling som vi syntes den bør være??

Større er bedre, og samme komponent type er også bedre.. for eksempel 4x1uF eller 4x100nF

0805 bør være maksimal størrelse, gerne mindre, så det kan sidde tættere på..

Schematic	SI5351_TCXO_WithMixerAndFilters	Create at	2025-08-31
		Update at	2026-03-28
Board	SI5351_TCXO_WithMixerAndFilters	Page	RF_LNA
Drawn		SCH_SI5351_TCXO_WithMixerAndFilters_2025-08-07	
Reviewed			
		Version	Size	Page 4 Total 12
EasyEDA		V1.0	A4	EasyEDA.com

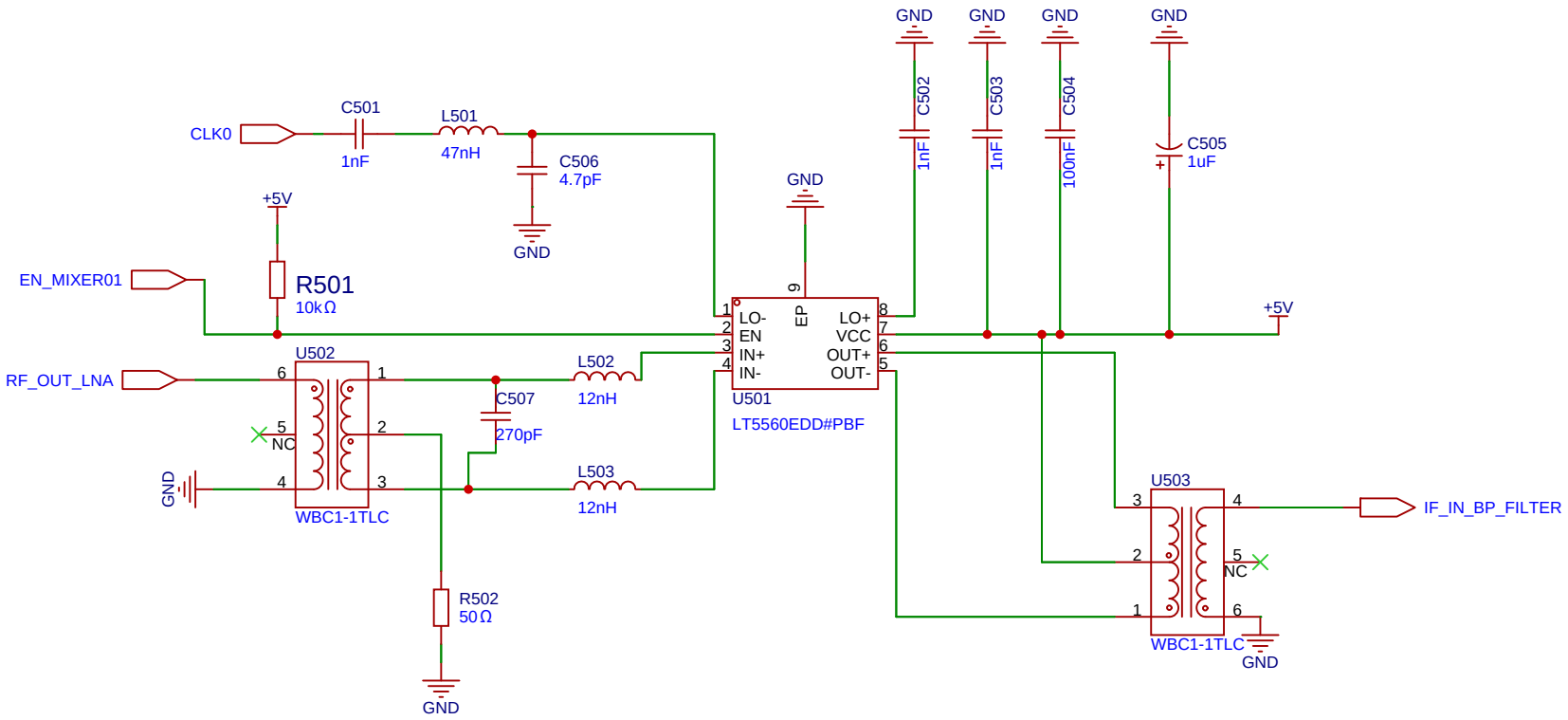

Schematic	SI5351_TCXO_WithMixerAndFilters	Create at	2025-08-31
		Update at	2026-03-28
Board	SI5351_TCXO_WithMixerAndFilters	Page	RF_MIXER_IF
Drawn		SCH_SI5351_TCXO_WithMixerAndFilters_2025-08-07	
Reviewed			
		Version	Size	Page 5 Total 12
EasyEDA		V1.0	A4	EasyEDA.com

RF → LC preselector → LNA → Mixer1(→20MHz) → 20MHz filter → Mixer2(→455kHz) → 455kHz filter → AM detector → Audio amp

IF_Filter 1 Skal være 10.7MHz - Gerne mere, for eksempelvis 20MHz

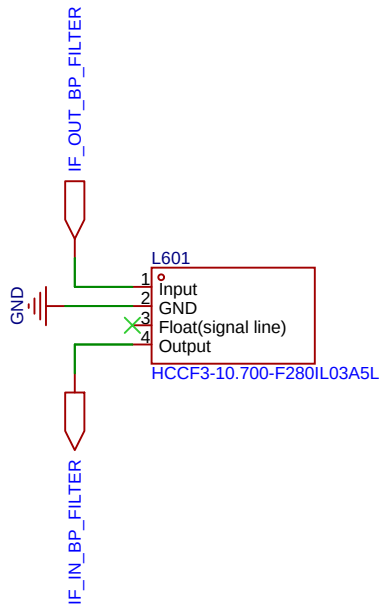

Schematic	SI5351_TCXO_WithMixerAndFilters	Create at	2025-08-31
		Update at	2026-03-28
Board	SI5351_TCXO_WithMixerAndFilters	Page	IF1_FILTER
Drawn		SCH_SI5351_TCXO_WithMixerAndFilters_2025-08-07	
Reviewed			
		Version	Size	Page 6 Total 12
EasyEDA		V1.0	A4	EasyEDA.com

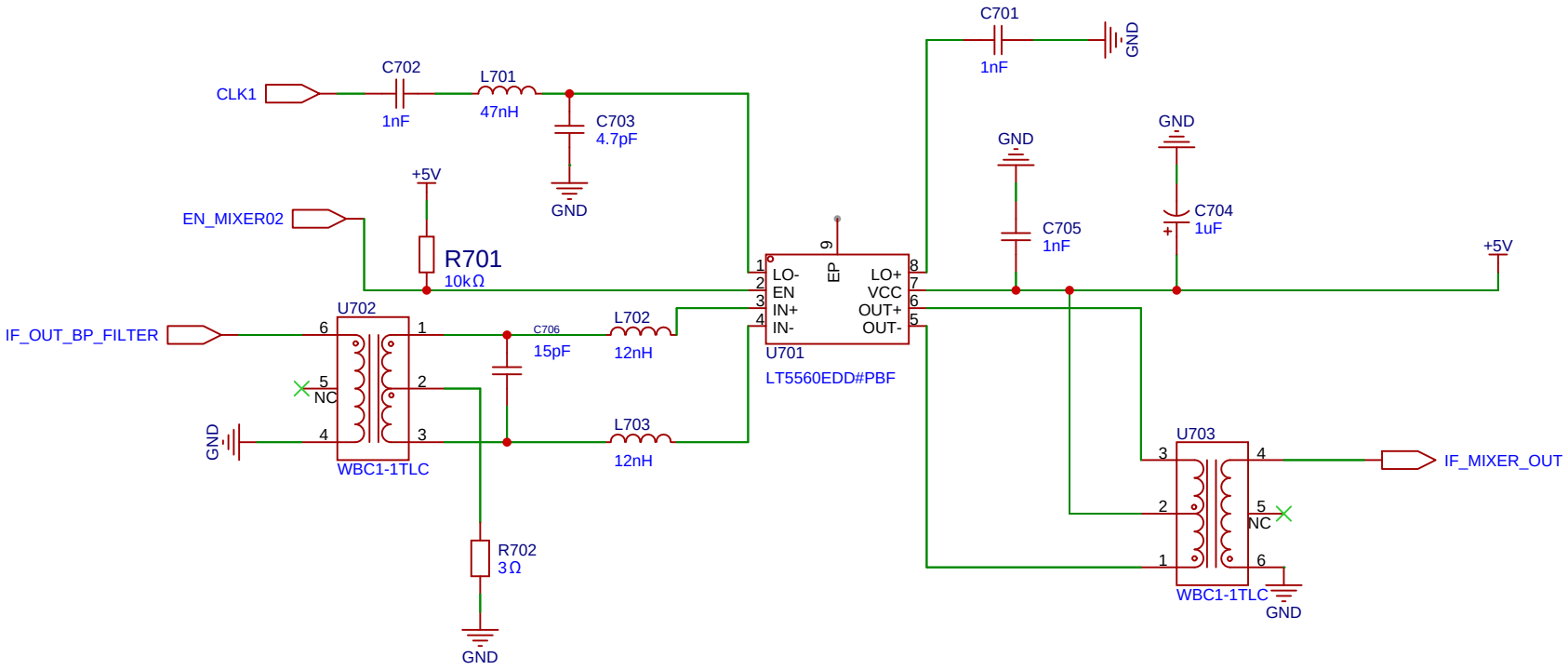

Schematic	SI5351_TCXO_WithMixerAndFilters	Create at	2025-08-31
		Update at	2026-03-28
Board	SI5351_TCXO_WithMixerAndFilters	Page	IF_MIXER_BF
Drawn		SCH_SI5351_TCXO_WithMixerAndFilters_2025-08-07	
Reviewed			
		Version	Size	Page 7 Total 12
EasyEDA		V1.0	A4	EasyEDA.com

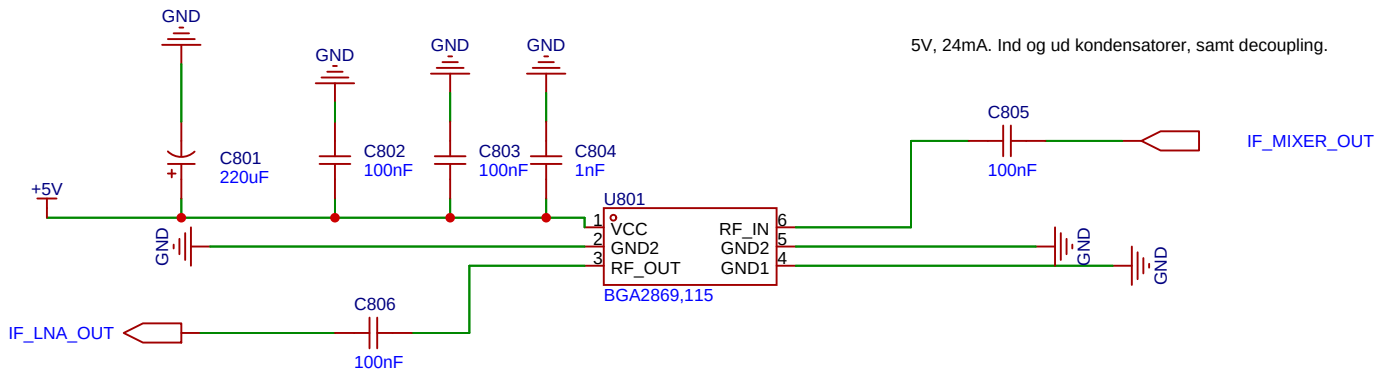

5V, 24mA. Ind og ud kondensatorer, samt decoupling.

Er decoupling som vi syntes den bør være??

Større er bedre, og samme komponent type er også bedre.. for eksempel 4x1uF eller 4x100nF

0805 bør være maksimal størrelse, gerne mindre, så det kan sidde tættere på..

Schematic	SI5351_TCXO_WithMixerAndFilters	Create at	2026-03-27
		Update at	2026-03-28
Board	SI5351_TCXO_WithMixerAndFilters	Page	IF_LNA
Drawn		SCH_SI5351_TCXO_WithMixerAndFilters_2025-08-07	
Reviewed			
		Version	Size	Page 8 Total 12
EasyEDA		V1.0	A4	EasyEDA.com

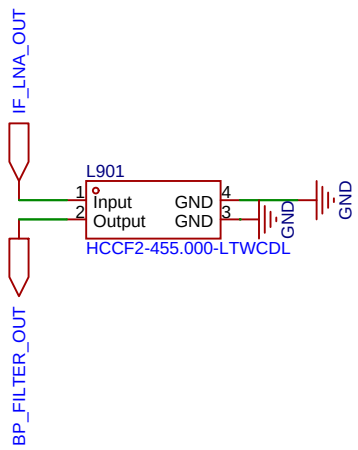

Schematic	SI5351_TCXO_WithMixerAndFilters	Create at	2025-08-31
		Update at	2026-03-28
Board	SI5351_TCXO_WithMixerAndFilters	Page	BF_FILTER
Drawn		SCH_SI5351_TCXO_WithMixerAndFilters_2025-08-07	
Reviewed			
		Version	Size	Page 9 Total 12
EasyEDA		V1.0	A4	EasyEDA.com

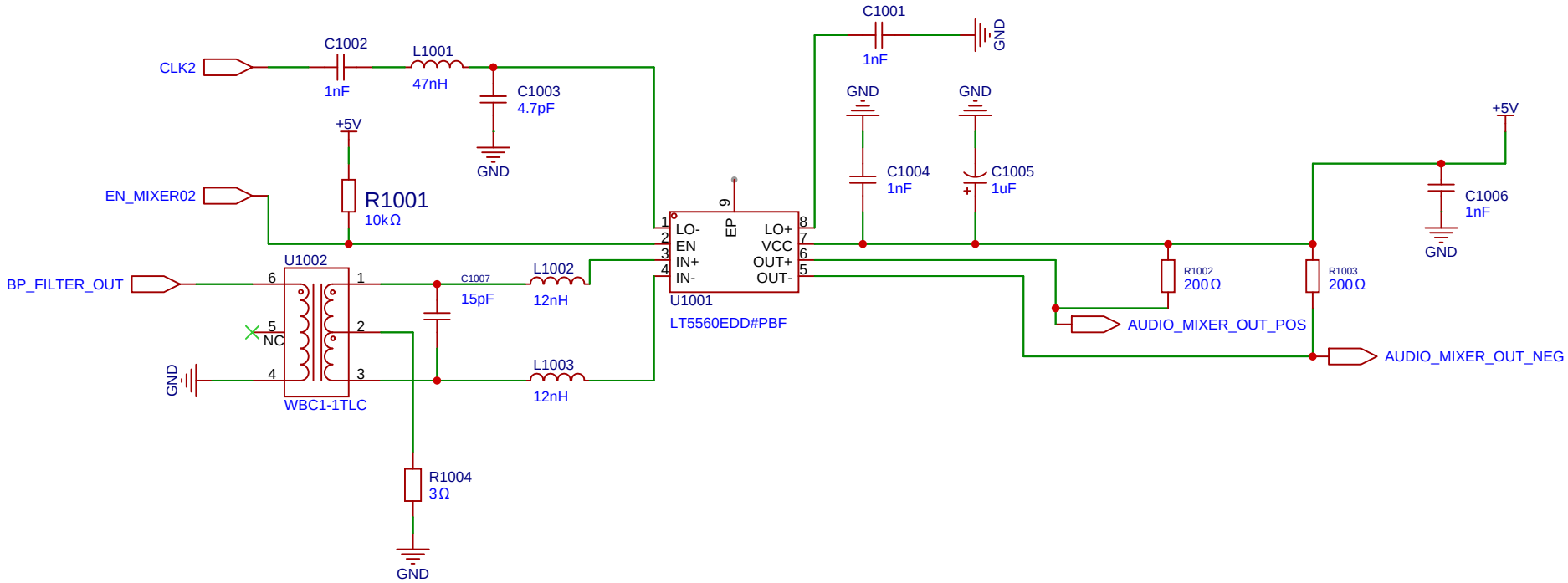

Schematic	SI5351_TCXO_WithMixerAndFilters	Create at	2026-03-27
		Update at	2026-03-28
Board	SI5351_TCXO_WithMixerAndFilters	Page	IF_MIXER_455
Drawn		SCH_SI5351_TCXO_WithMixerAndFilters_2025-08-07	
Reviewed			
		Version	Size	Page 10 Total 12
EasyEDA		V1.0	A4	EasyEDA.com

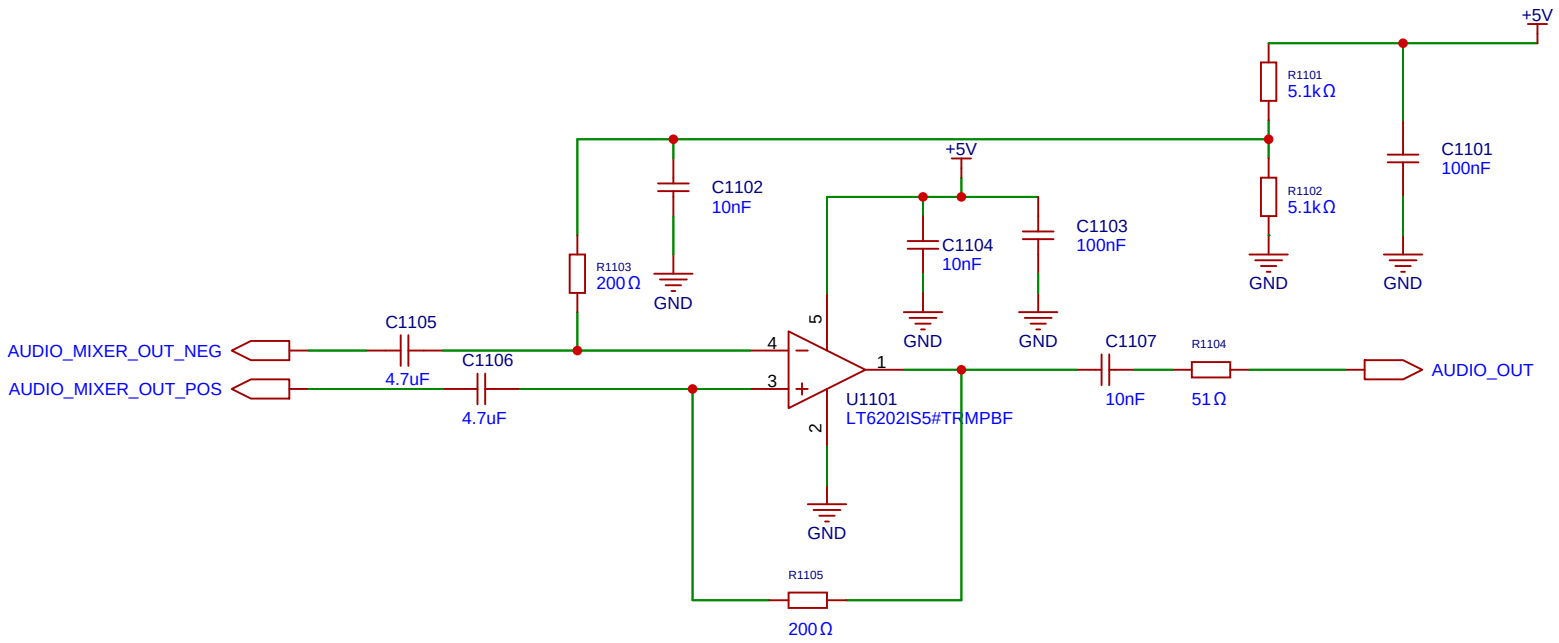

Schematic	SI5351_TCXO_WithMixerAndFilters	Create at	2025-09-02
		Update at	2026-03-28
Board	SI5351_TCXO_WithMixerAndFilters	Page	OP_AMP_AUDIO
Drawn		SCH_SI5351_TCXO_WithMixerAndFilters_2025-08-07	
Reviewed			
		Version	Size	Page 11 Total 12
EasyEDA		V1.0	A4	EasyEDA.com

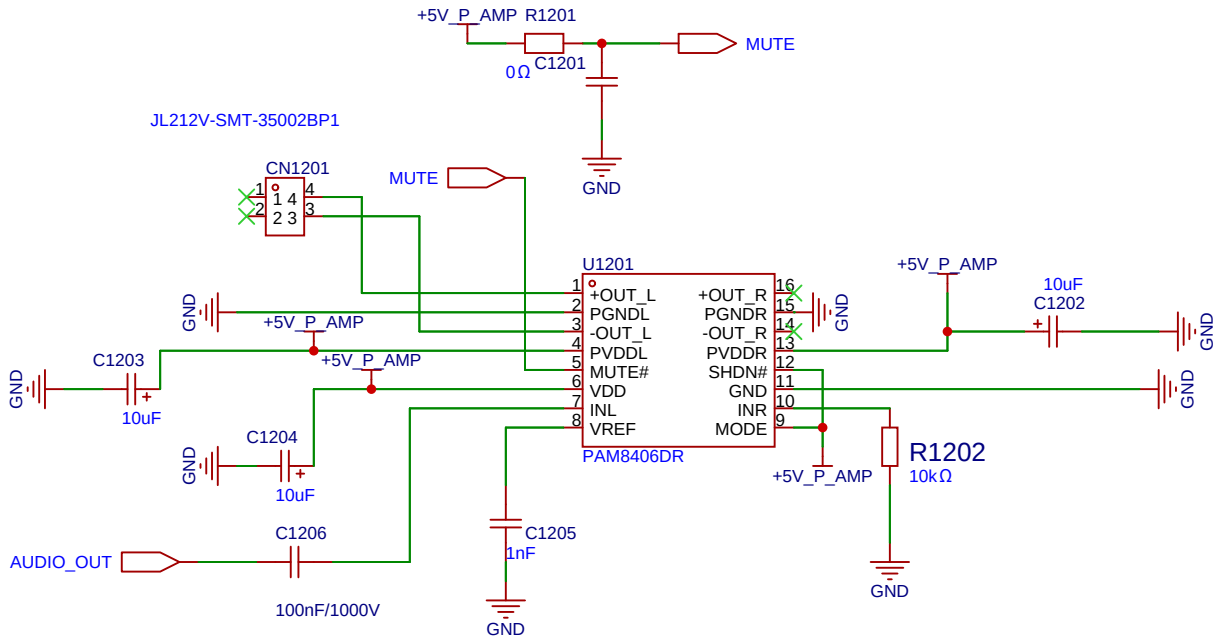

Schematic	SI5351_TCXO_WithMixerAndFilters	Create at	2025-08-31
		Update at	2026-03-28
Board	SI5351_TCXO_WithMixerAndFilters	Page	SPK_AMP
Drawn		SCH_SI5351_TCXO_WithMixerAndFilters_2025-08-07	
Reviewed			
		Version	Size	Page 12 Total 12
EasyEDA		V1.0	A4	EasyEDA.com