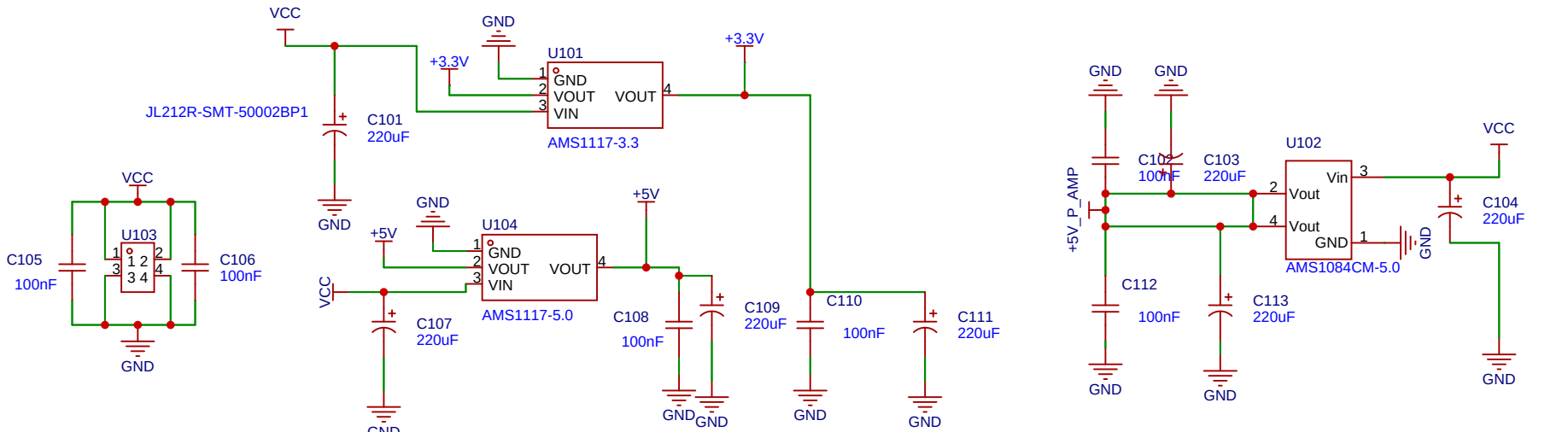


RF → LC preselector → LNA → Mixer1(→10.7MHz) → 10.7MHz filter → Mixer2(→455kHz) → 455kHz filter → AM detector → Audio amp

Alle komponenter svarer til LCSC Part numre fra sidste ordre

Layout is made for 1XTW6000MAA (DSB321SDN) TCXO

Det skal kontrolleres om kredsløbet svarer til Theonethatiwant, clockosc gør, men hvad med resten?

Komponenter svarer til oprindeligt schematic.

Skal decoupling fortsætte som den er nu? Eller simplificeres?

SDA_3V
Pull-up resistors @ 1k enable fast I2

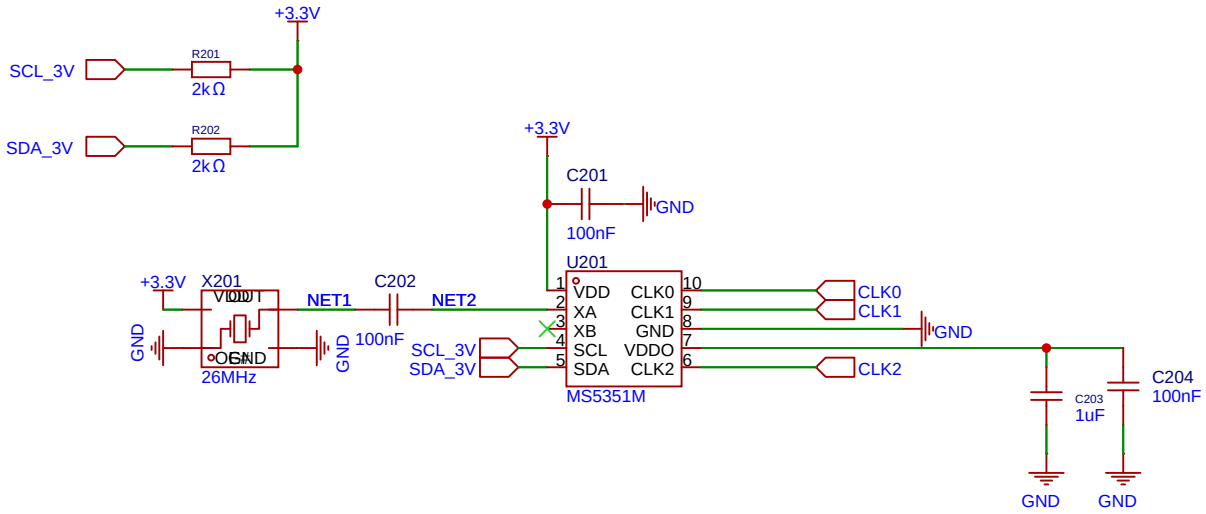


Det skal kontrolleres om kredsløbet svarer til Theonethatiwant, clockosc gør, men hvad med resten?

| | | | |
|---|---|---|---|
| Schematic | SI5351_TCXO_WithMixerAndFilters | Create at | 2025-08-31 |
| | | Update at | 2026-03-28 |
| Board | SI5351_TCXO_WithMixerAndFilters | Page | SI5351_TCXO |
| Drawn | | SCH_SI5351_TCXO_WithMixerAndFilters_2025-08-07 | |
| Reviewed | | | |
| | | Version | Size | Page 2 Total 12 |
| EasyEDA | | V1.0 | A4 | EasyEDA.com |

RF_Filter er blevet justeret sammen med Claude.
Næste led er RF_LNA
Tilføjet ESD beskyttelse på RF_ANT, med ESD diode.
Impedans matching bør være ok som det er nu.

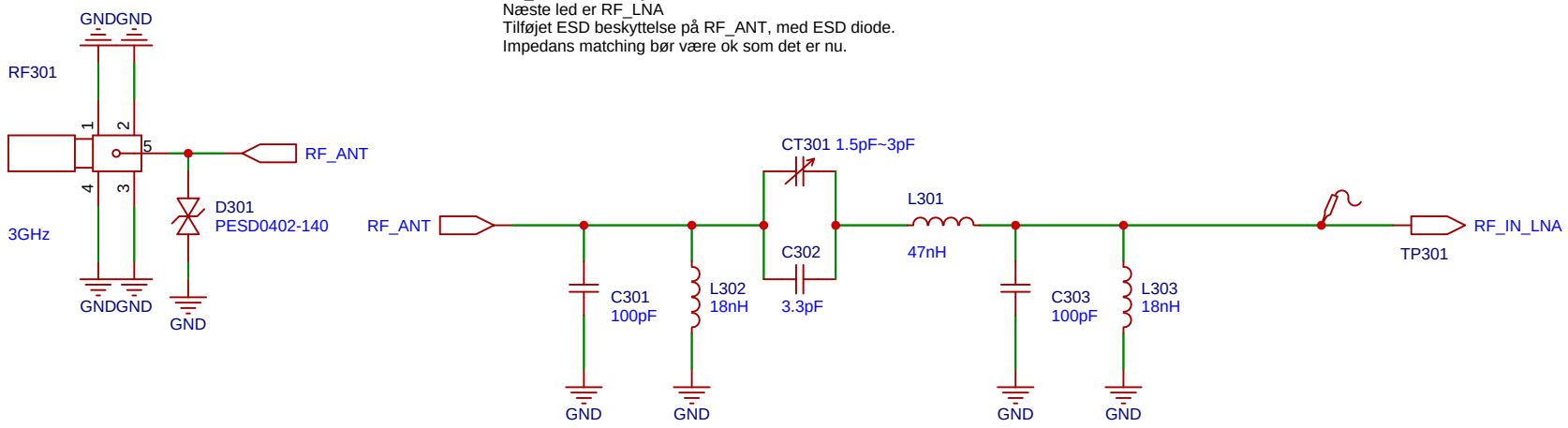


| | | | |
|---|---|---|---|
| Schematic | SI5351_TCXO_WithMixerAndFilters | Create at | 2025-08-31 |
| | | Update at | 2026-03-28 |
| Board | SI5351_TCXO_WithMixerAndFilters | Page | RF_FILTER |
| Drawn | | SCH_SI5351_TCXO_WithMixerAndFilters_2025-08-07 | |
| Reviewed | | | |
| | | Version | Size | Page 3 Total 12 |
| EasyEDA | | V1.0 | A4 | EasyEDA.com |

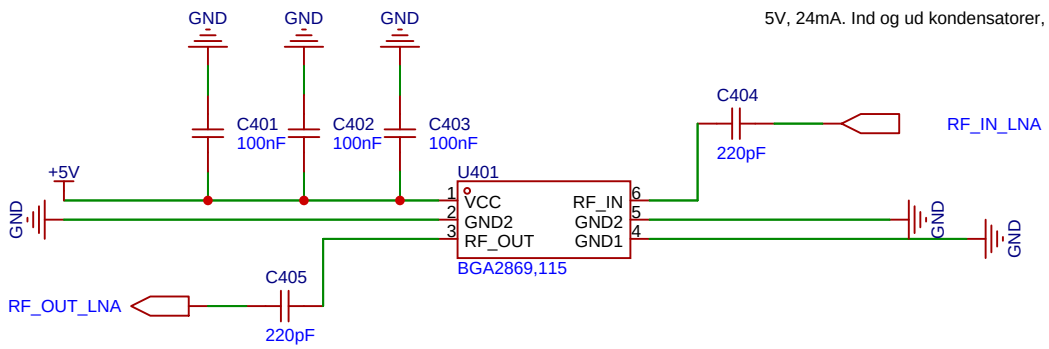


5V, 24mA. Ind og ud kondensatorer, samt decoupling.

Er decoupling som vi syntes den bør være??

Større er bedre, og samme komponent type er også bedre.. for eksempel 4x1uF eller 4x100nF

0805 bør være maksimal størrelse, gerne mindre, så det kan sidde tættere på..

| | | | |
|---|---|---|---|
| Schematic | SI5351_TCXO_WithMixerAndFilters | Create at | 2025-08-31 |
| | | Update at | 2026-03-28 |
| Board | SI5351_TCXO_WithMixerAndFilters | Page | RF_LNA |
| Drawn | | SCH_SI5351_TCXO_WithMixerAndFilters_2025-08-07 | |
| Reviewed | | | |
| | | Version | Size | Page 4 Total 12 |
| EasyEDA | | V1.0 | A4 | EasyEDA.com |

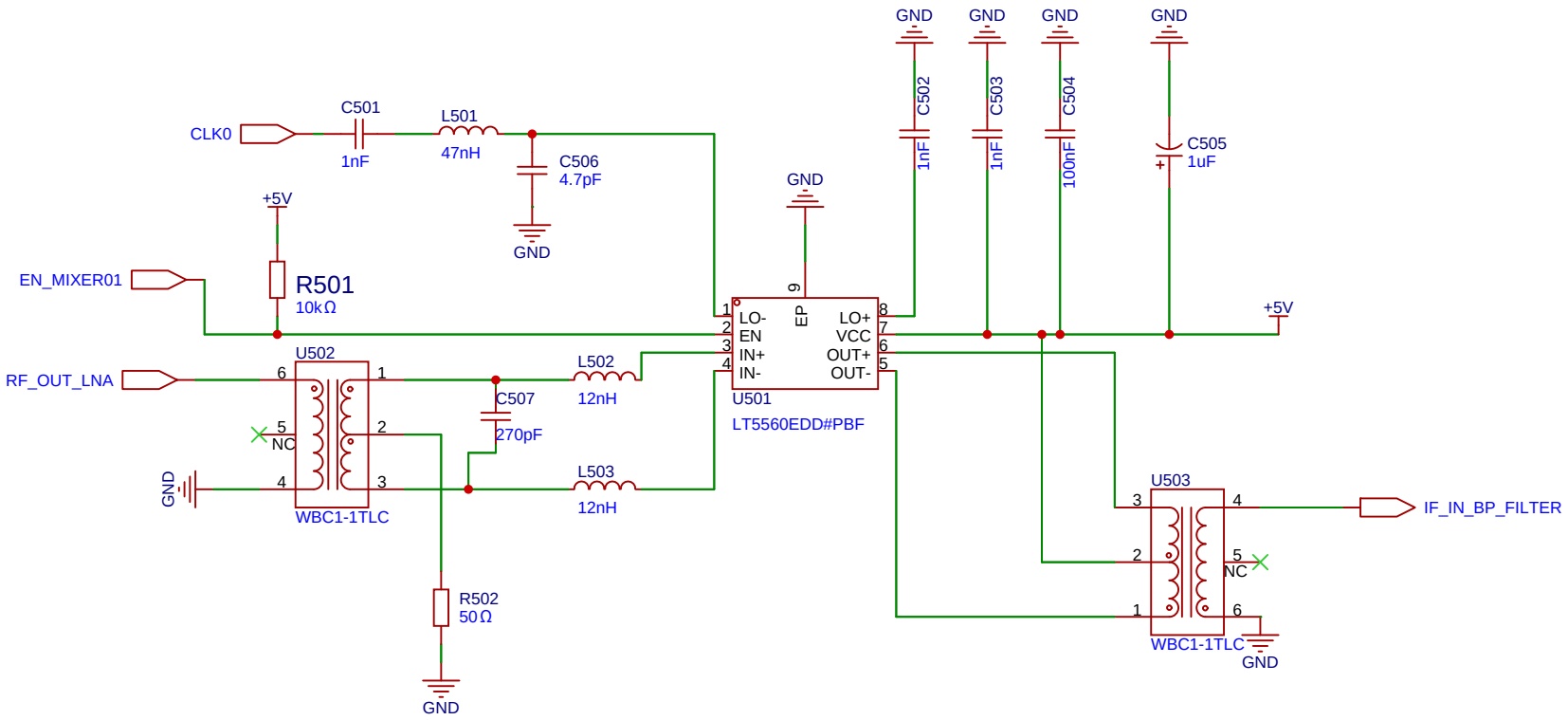


| | | | |
|---|---|---|---|
| Schematic | SI5351_TCXO_WithMixerAndFilters | Create at | 2025-08-31 |
| | | Update at | 2026-03-28 |
| Board | SI5351_TCXO_WithMixerAndFilters | Page | RF_MIXER_IF |
| Drawn | | SCH_SI5351_TCXO_WithMixerAndFilters_2025-08-07 | |
| Reviewed | | | |
| | | Version | Size | Page 5 Total 12 |
| EasyEDA | | V1.0 | A4 | EasyEDA.com |

RF → LC preselector → LNA → Mixer1(→20MHz) → 20MHz filter → Mixer2(→455kHz) → 455kHz filter → AM detector → Audio amp

IF_Filter 1 Skal være 10.7MHz - Gerne mere, for eksempelvis 20MHz

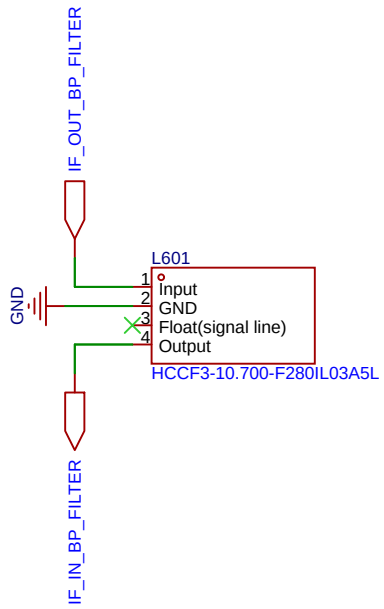


| | | | |
|---|---|---|---|
| Schematic | SI5351_TCXO_WithMixerAndFilters | Create at | 2025-08-31 |
| | | Update at | 2026-03-28 |
| Board | SI5351_TCXO_WithMixerAndFilters | Page | IF1_FILTER |
| Drawn | | SCH_SI5351_TCXO_WithMixerAndFilters_2025-08-07 | |
| Reviewed | | | |
| | | Version | Size | Page 6 Total 12 |
| EasyEDA | | V1.0 | A4 | EasyEDA.com |

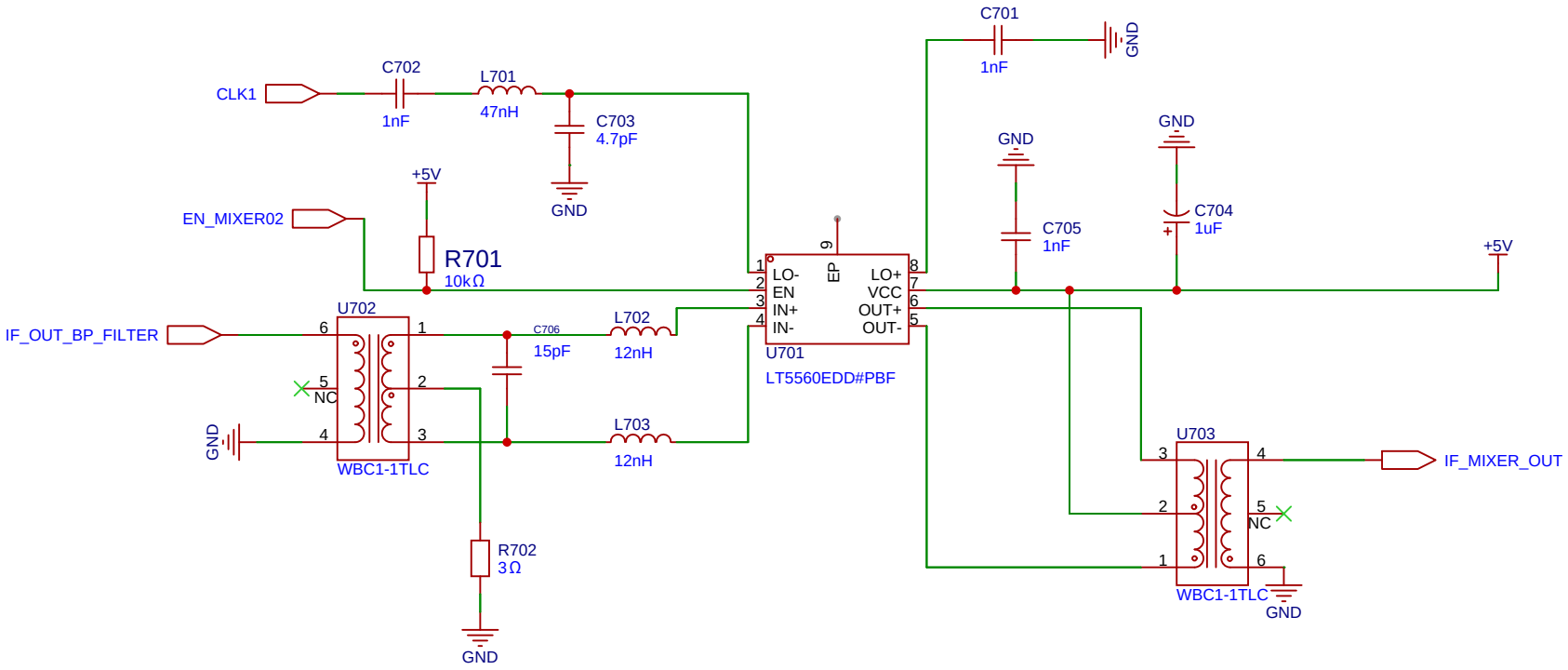


| | | | |
|---|---|---|---|
| Schematic | SI5351_TCXO_WithMixerAndFilters | Create at | 2025-08-31 |
| | | Update at | 2026-03-28 |
| Board | SI5351_TCXO_WithMixerAndFilters | Page | IF_MIXER_BF |
| Drawn | | SCH_SI5351_TCXO_WithMixerAndFilters_2025-08-07 | |
| Reviewed | | | |
| | | Version | Size | Page 7 Total 12 |
| EasyEDA | | V1.0 | A4 | EasyEDA.com |

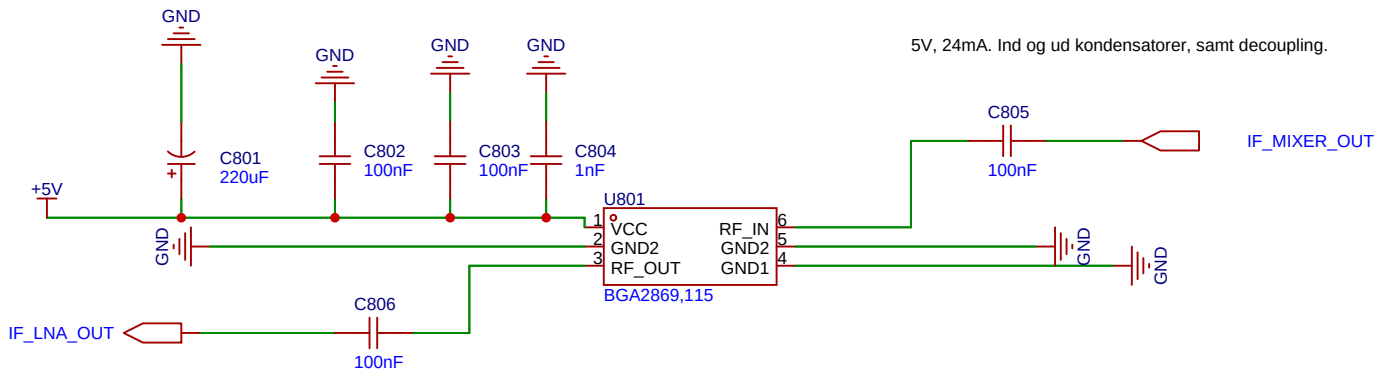


5V, 24mA. Ind og ud kondensatorer, samt decoupling.

Er decoupling som vi syntes den bør være??

Større er bedre, og samme komponent type er også bedre.. for eksempel 4x1uF eller 4x100nF

0805 bør være maksimal størrelse, gerne mindre, så det kan sidde tættere på..

| | | | |
|---|---|---|---|
| Schematic | SI5351_TCXO_WithMixerAndFilters | Create at | 2026-03-27 |
| | | Update at | 2026-03-28 |
| Board | SI5351_TCXO_WithMixerAndFilters | Page | IF_LNA |
| Drawn | | SCH_SI5351_TCXO_WithMixerAndFilters_2025-08-07 | |
| Reviewed | | | |
| | | Version | Size | Page 8 Total 12 |
| EasyEDA | | V1.0 | A4 | EasyEDA.com |

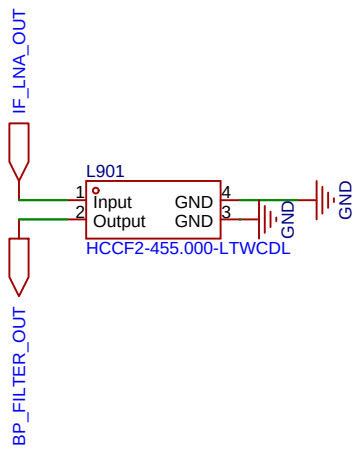


| | | | |
|---|---|---|---|
| Schematic | SI5351_TCXO_WithMixerAndFilters | Create at | 2025-08-31 |
| | | Update at | 2026-03-28 |
| Board | SI5351_TCXO_WithMixerAndFilters | Page | BF_FILTER |
| Drawn | | SCH_SI5351_TCXO_WithMixerAndFilters_2025-08-07 | |
| Reviewed | | | |
| | | Version | Size | Page 9 Total 12 |
| EasyEDA | | V1.0 | A4 | EasyEDA.com |

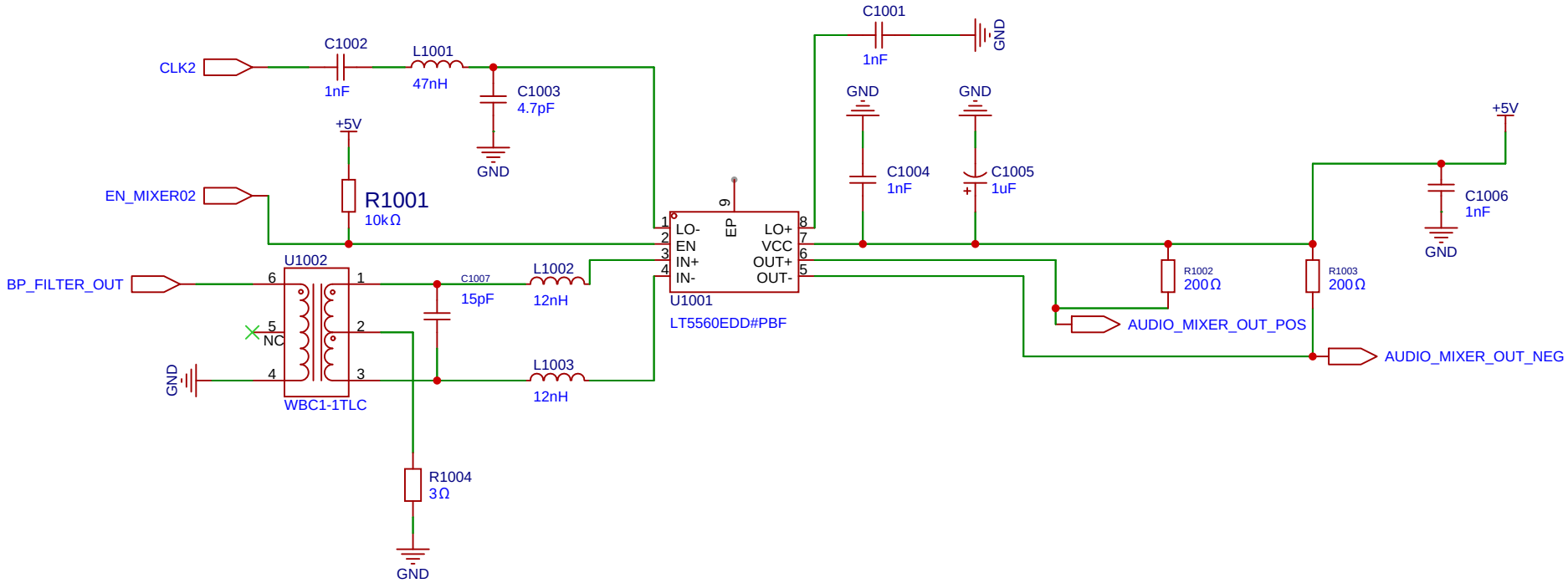


| | | | |
|---|---|---|---|
| Schematic | SI5351_TCXO_WithMixerAndFilters | Create at | 2026-03-27 |
| | | Update at | 2026-03-28 |
| Board | SI5351_TCXO_WithMixerAndFilters | Page | IF_MIXER_455 |
| Drawn | | SCH_SI5351_TCXO_WithMixerAndFilters_2025-08-07 | |
| Reviewed | | | |
| | | Version | Size | Page 10 Total 12 |
| EasyEDA | | V1.0 | A4 | EasyEDA.com |

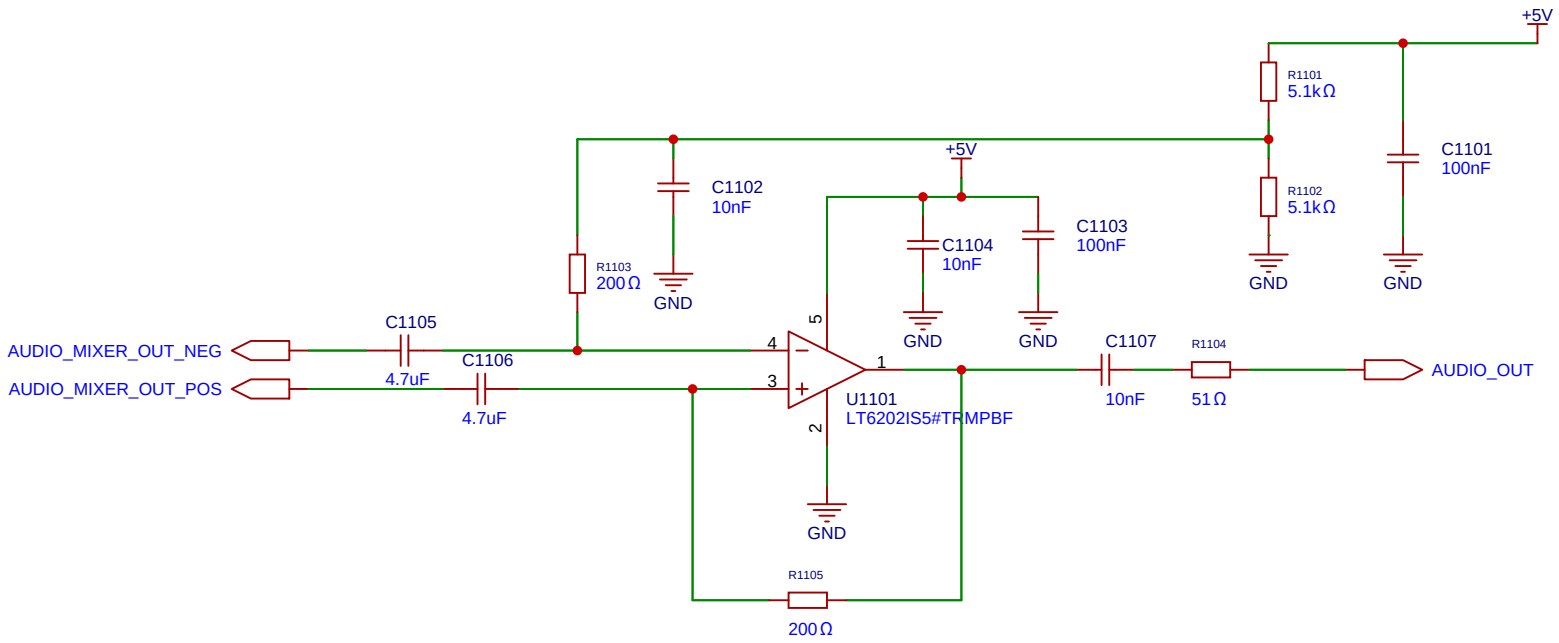


| | | | |
|---|---|---|---|
| Schematic | SI5351_TCXO_WithMixerAndFilters | Create at | 2025-09-02 |
| | | Update at | 2026-03-28 |
| Board | SI5351_TCXO_WithMixerAndFilters | Page | OP_AMP_AUDIO |
| Drawn | | SCH_SI5351_TCXO_WithMixerAndFilters_2025-08-07 | |
| Reviewed | | | |
| | | Version | Size | Page 11 Total 12 |
| EasyEDA | | V1.0 | A4 | EasyEDA.com |

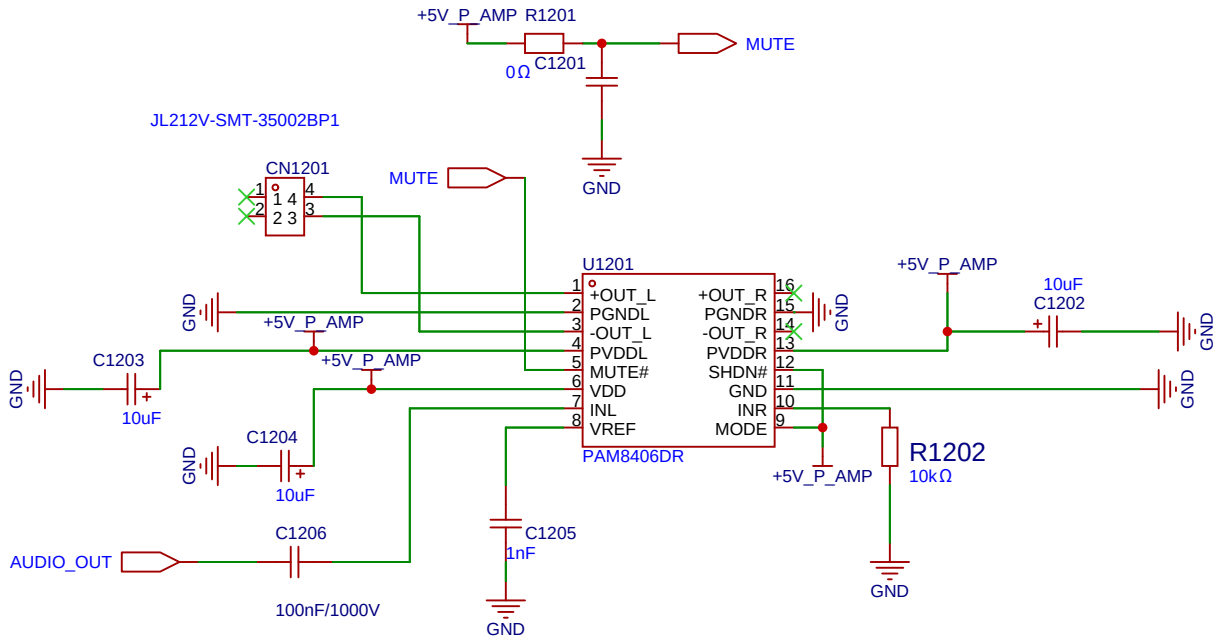


| | | | |
|---|---|---|---|
| Schematic | SI5351_TCXO_WithMixerAndFilters | Create at | 2025-08-31 |
| | | Update at | 2026-03-28 |
| Board | SI5351_TCXO_WithMixerAndFilters | Page | SPK_AMP |
| Drawn | | SCH_SI5351_TCXO_WithMixerAndFilters_2025-08-07 | |
| Reviewed | | | |
| | | Version | Size | Page 12 Total 12 |
| EasyEDA | | V1.0 | A4 | EasyEDA.com |