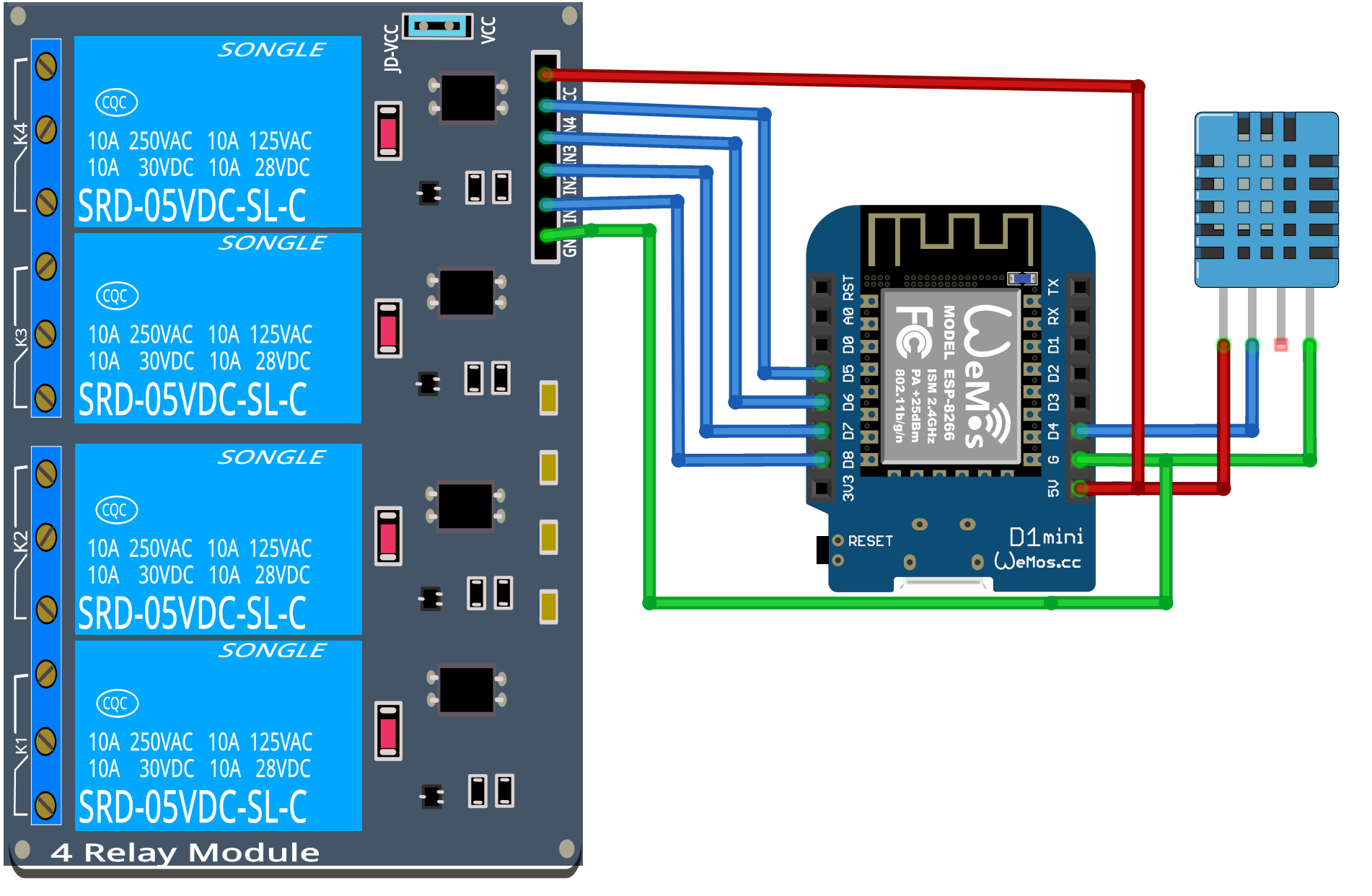
SONGLE
CQC
10A 250VAC 10A 125VAC
10A 30VDC 10A 28VDC
SRD-05VDC-SL-C
K4
K3
K2
K1
JD-VCC
VCC
IN4
IN3
IN2
IN1
GND
4 Relay Module
WeMos
MODEL ESP-8266
ISM 2.4GHz
PA +25dBm
802.11b/g/n
3V3 D8 D7 D6 D5 D0 A0 RST
5V G D4 D3 D2 D1 RX TX
RESET
D1mini
WeMos.cc
fritzing