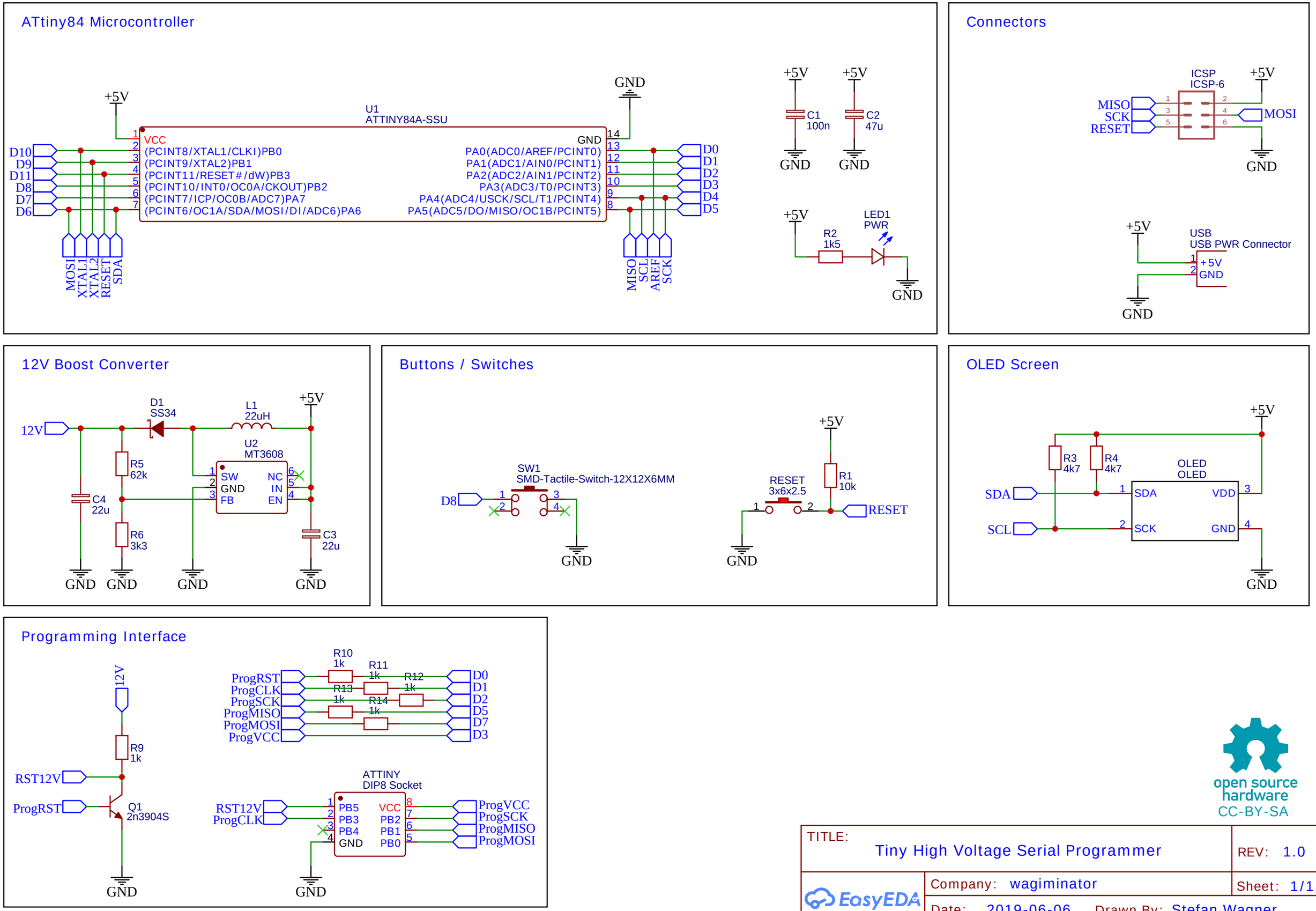
ATtiny84 Microcontroller
U1
ATTINY84A-SSU
+5V
GND
VCC
(PCINT8/XTAL1/CLKI)PB0
(PCINT9/XTAL2)PB1
(PCINT11/RESET#/dW)PB3
(PCINT10/INT0/OC0A/CKOUT)PB2
(PCINT7/ICP/OC0B/ADC7)PA7
(PCINT6/OC1A/SDA/MOSI/DI/ADC6)PA6
PA0(ADC0/AREF/PCINT0)
PA1(ADC1/AIN0/PCINT1)
PA2(ADC2/AIN1/PCINT2)
PA3(ADC3/T0/PCINT3)
PA4(ADC4/USCK/SCL/T1/PCINT4)
PA5(ADC5/DO/MISO/OC1B/PCINT5)
D10
D9
D11
D8
D7
D6
MOSI
XTAL1
XTAL2
RESET
SDA
MISO
SCL
AREF
SCK
D0
D1
D2
D3
D4
D5
C1
100n
C2
47u
R2
1k5
LED1
PWR
Connectors
ICSP
ICSP-6
MISO
SCK
RESET
MOSI
USB
USB PWR Connector
+5V
GND
12V Boost Converter
12V
D1
SS34
L1
22uH
U2
MT3608
SW
GND
FB
NC
IN
EN
R5
62k
R6
3k3
C4
22u
C3
22u
Buttons / Switches
SW1
SMD-Tactile-Switch-12X12X6MM
D8
RESET
3x6x2.5
R1
10k
RESET
OLED Screen
R3
4k7
R4
4k7
OLED
OLED
SDA
SCL
SCK
VDD
Programming Interface
12V
R9
1k
RST12V
ProgRST
Q1
2n3904S
R10
1k
R11
1k
R12
1k
R13
1k
R14
1k
ProgRST
ProgCLK
ProgSCK
ProgMISO
ProgMOSI
ProgVCC
D0
D1
D2
D5
D7
D3
ATTINY
DIP8 Socket
RST12V
ProgCLK
PB5
PB3
PB4
GND
VCC
PB2
PB1
PB0
ProgVCC
ProgSCK
ProgMISO
ProgMOSI
open source
hardware
CC-BY-SA
TITLE:
Tiny High Voltage Serial Programmer
REV: 1.0
Company: wagiminator
Sheet: 1/1
Date: 2019-06-06
Drawn By: Stefan Wagner
EasyEDA