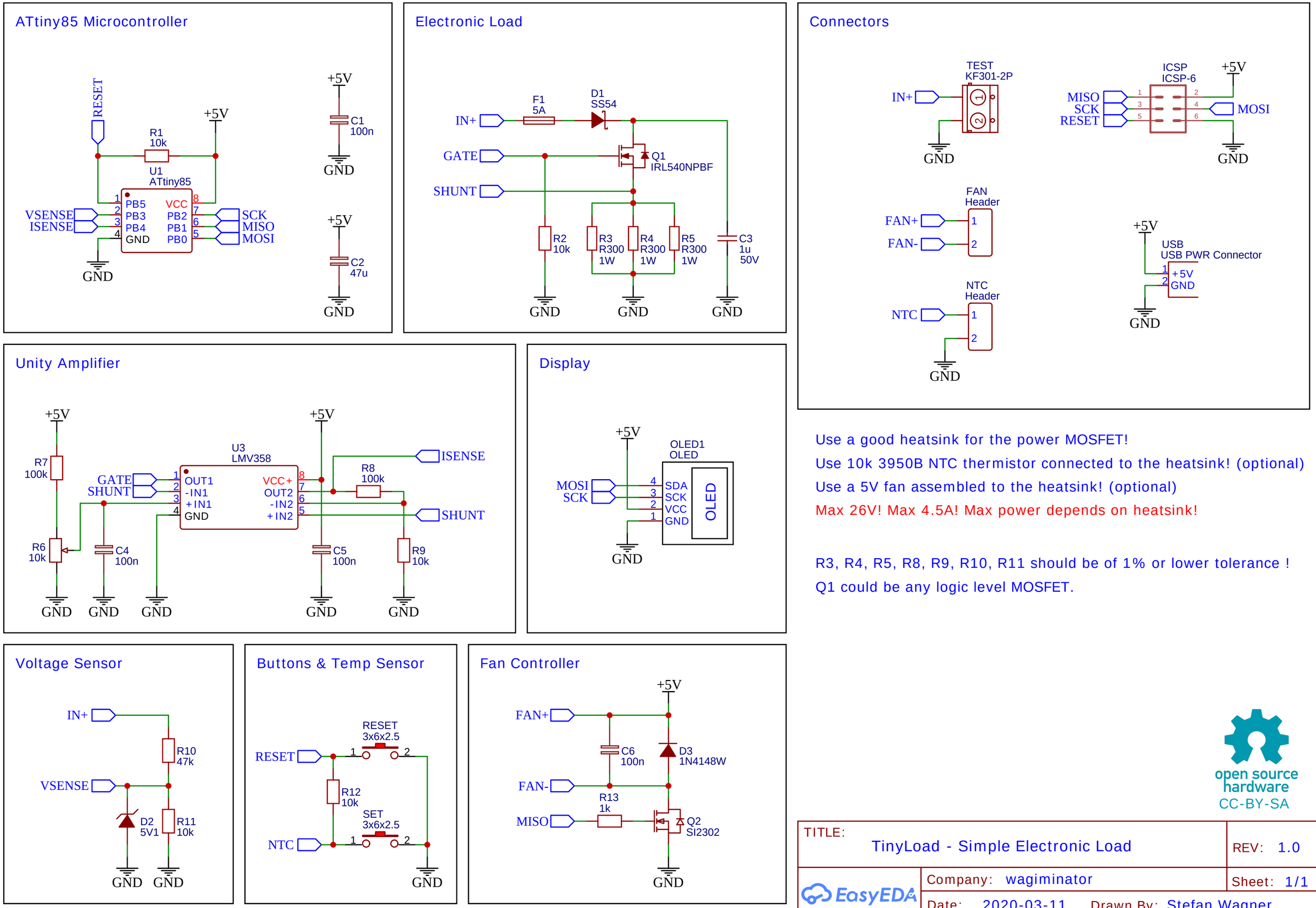

Use a good heatsink for the power MOSFET!

Use 10k 3950B NTC thermistor connected to the heatsink! (optional)

Use a 5V fan assembled to the heatsink! (optional)

Max 26V! Max 4.5A! Max power depends on heatsink!

R3, R4, R5, R8, R9, R10, R11 should be of 1% or lower tolerance !

Q1 could be any logic level MOSFET.

open source hardware
CC-BY-SA

TITLE: TinyLoad - Simple Electronic Load		REV: 1.0
EasyEDA	Company: wagiminator	Sheet: 1/1
	Date: 2020-03-11 Drawn By: Stefan Wagner	