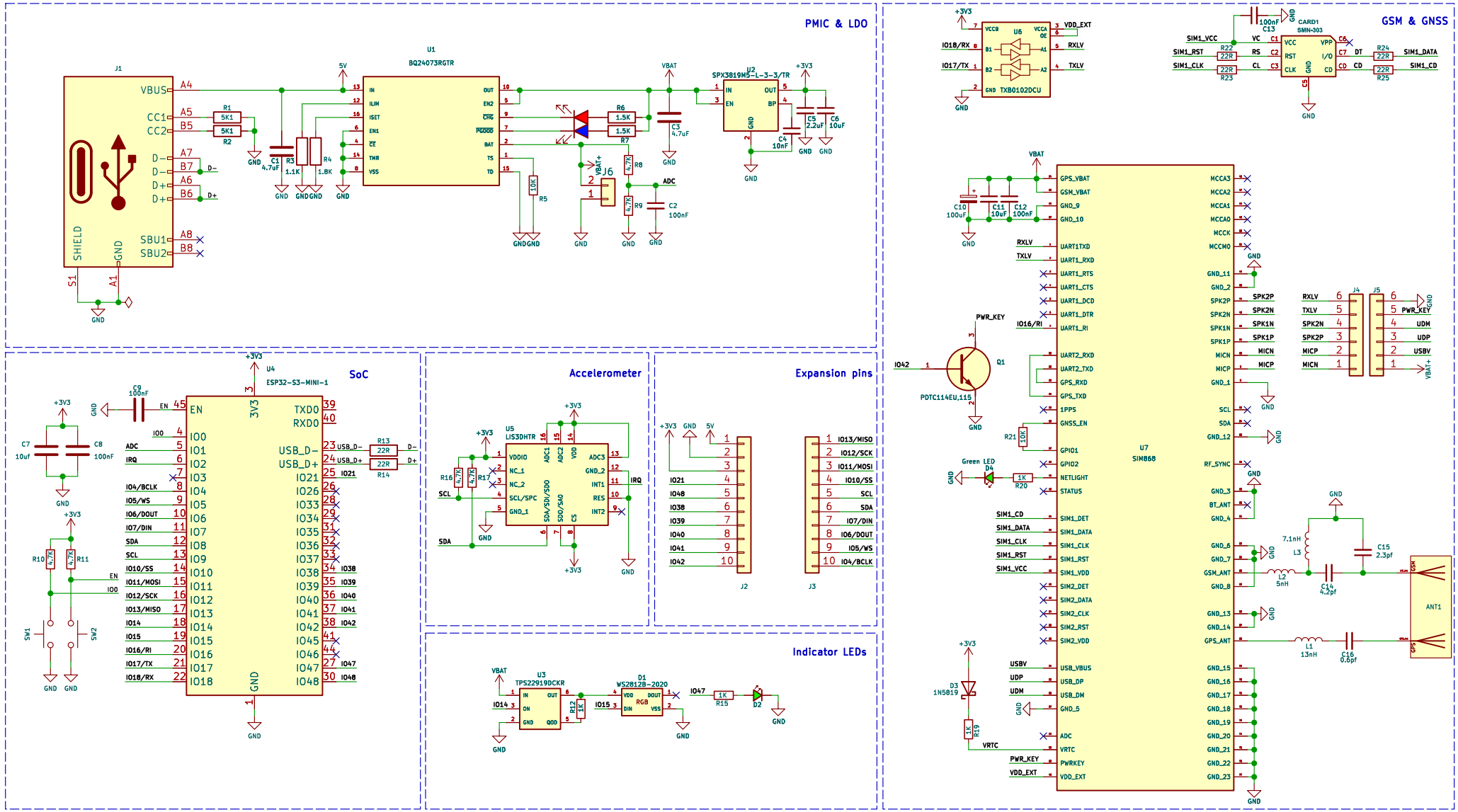

Semicon Media Pvt Ltd

Jobit Joseph

Sheet: /

File: GL868_ESP32V3.1.kicad_sch

Title: GL868_ESP32

Size: A4	Date: 2026-03-16	**Rev: 3.1**
KiCad E.D.A. 9.0.4		Id: 1/1