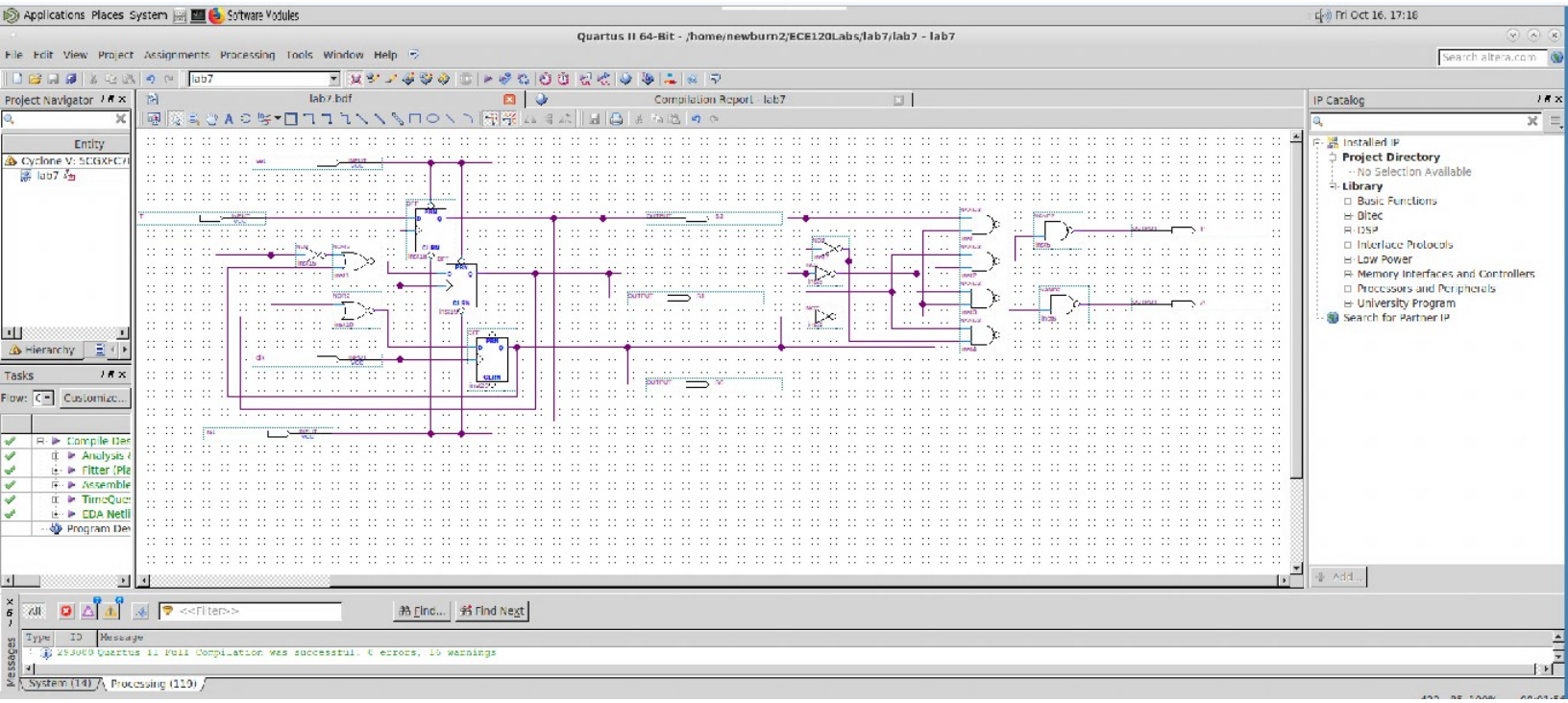
Applications Places System
Software Modules
Fri Oct 16, 17:16
Quartus II 64-Bit - /home/newburn2/ECE120Labs/lab7/lab7 - lab7
File Edit View Project Assignments Processing Tools Window Help
Project Navigator
Entity
Cyclone V: 5CGXFC7
lab7
Hierarchy
Tasks
Flow:
Customize...
Compile Des
Analysis &
Fitter (Pla
Assemble
TimeQuic
EDA Netli
Program Dev
lab7.bdf
Compilation Report - lab7
IP Catalog
Installed IP
Project Directory
No Selection Available
Library
Basic Functions
Bitec
DSP
Interface Protocols
Low Power
Memory Interfaces and Controllers
Processors and Peripherals
University Program
Search for Partner IP
Add...
All
<<Filter>>
Find...
Find Next
Messages
Type
ID
Message
293000 Quartus II Full Compilation was successful. 0 errors, 19 warnings
System (14)
Processing (119)