Delay Line Effects

Intro to Audio Tech 1
Jocelyn Kavanagh
Monday, November 10

Georgia Tech

Lesson Outline

- Delays
- Flanger, Chorus, Phaser
- Up Next…

Delays

- Delays are extremely powerful and versatile tools
- Delays of samples as a time (extremely short length) create filters
- Delays with slightly longer time spans allow us to build effects like:
  - Flangers
  - Delays
  - Chorus
  - Phasers
  - Echos

Simple Delay or Echo

- An echo is a separate repetition of sound perceived at longer than 25-35ms
- If the delay time is shorter, the sounds may not be perceived separate sound
- For multiple echoes, add feedback into the delay line and scale the echo strength with a gain factor

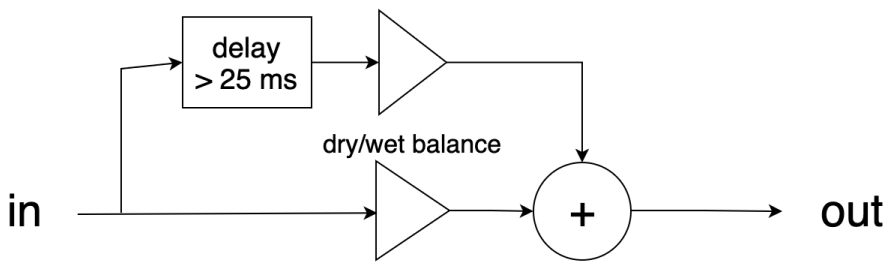

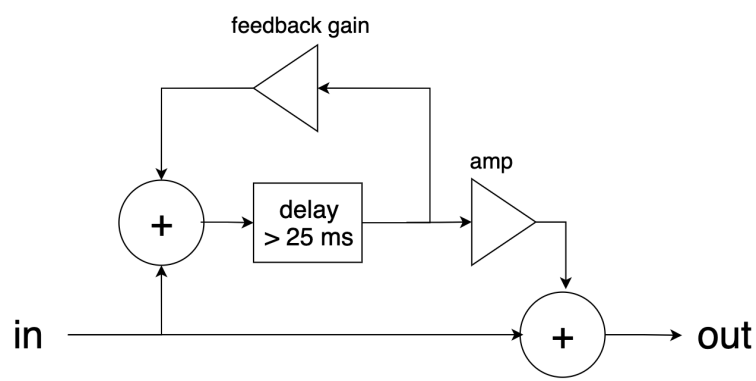

More Delays

- Tape Delay
  - To simulate the frequencies lost on an analog tape delay, add a filters in the feedback loop
- Slapback delay
  - An echo with 10-120ms delay time creating a doubling effect often pushed to stereo
- Multitap delay
  - Create parallel delay lines that have separate delay lengths and feedback gain controls
  - Multiband-multitap delay is similar but acts on different frequency bands
- Ping-Pong delay
  - The delayed sound bounces between the left and right channel after each delay loop

Flanger

- Flanging effect occurs when a signal made up of a fixed delay signal and variable delayed signal
- Variable delay between 1-10ms controlled by an LFO
- The slight variations in phase between the constant and variable signal causes filtering effects

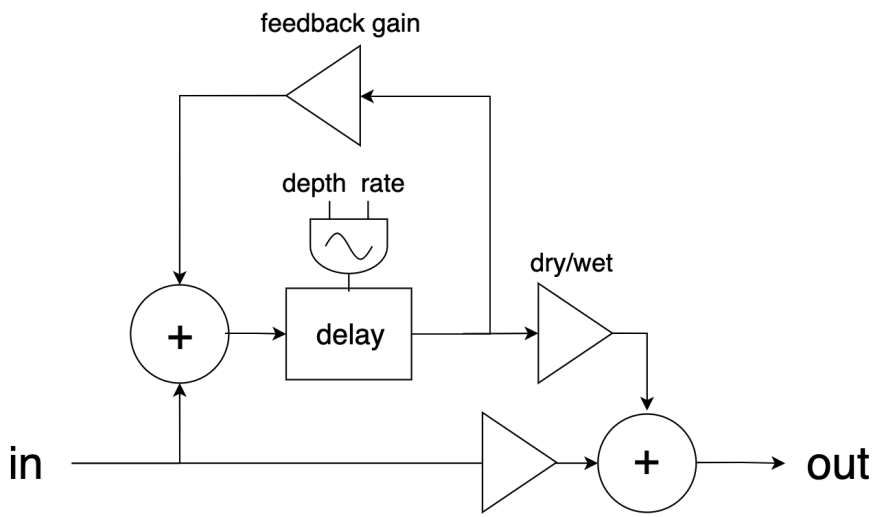

Flanger Filtering Frequencies

- If a 100 Hz signal is delayed by 5 ms, it will cancel out its original input (because 100 Hz signal has a period of 10 ms)
- This also happens at 300 Hz, 500 Hz, 700 Hz, etc
- Why?

$$\phi(f) = 2\pi f d$$

$$\phi(300) = 2\pi * 300 * 0.005 = 3\pi \; radians$$

(the same as a 180-degree phase shift)

- So, a flanger eliminates all frequencies corresponding to odd harmonics of a fundamental whose period is double that of a given delay time
- All odd harmonics have opposite phase of the non-delayed signal

Georgia Tech

Flanger Filtering Frequencies

- What about even frequencies?
- Even frequencies have the same phase of the delayed signal
- Why?

$$\phi(f) = 2\pi f d$$

$$\phi(200) = 2\pi * 200 * 0.005 = 2\pi \; radians$$

- So, a flanger reinforces frequencies corresponding to all harmonics of a fundamental whose period is equal to that of a given delay time

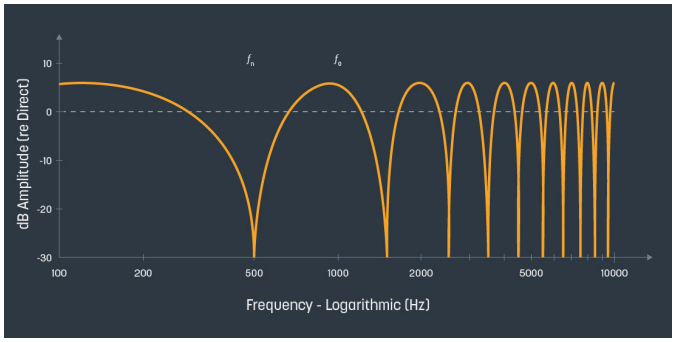

Common Parameters of Flanger Effects

- Depth
  - The dry/wet of the original and filtered signal
- Delay
  - The minimum delay time in the system
  - Corresponds to the max freq of the first band that will be reinforced (double the minimum delay corresponds to the max freq of the first band that will be attenuated)
- Width (or depth or sweep depth)
  - Amplitude of the LFO
  - The delay time oscillates between the min delay value and the min delay value plus width
- Feedback
  - Amount of feedback in the system
  - Negative causes notches and peaks in the spectrum to invert
- Link
  - Couple the LFO's pitch and amplitude to control "pitch deviation"

Chorus

- Simulates the presence of many voices creating more or less the same sound but from a single voice
- Variations are created by introducing a variable delay line
- Built the same as a flanger but with no feedback and with a delay larger than 30ms
- You increase the number of voices by adding more delay

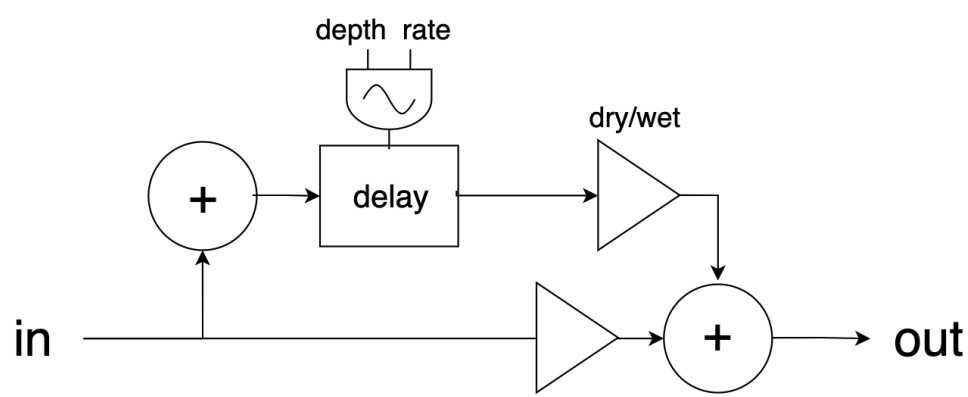

2nd Order Allpass Filters

- A 2nd order allpass filter performs a complete phase rotation from 0-Nyquist
- It has a flat frequency response, but shifts the phase of the signal
- Adding a filtered version to the original signal will cause phase cancellation and audible filtering

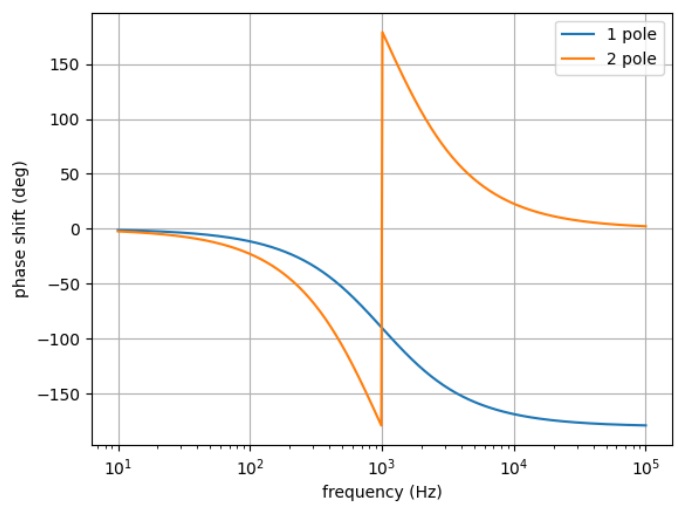

Phaser

- Rather than using a delay line, we can instead use allpass filters
- This produces a similar effect; however, the frequency bands are not equidistant, and you can control the bandwidth of the bands with the filter's q
- By adding more allpass filters in series, you create more attenuation bands
  - This is usually called the stages of a phaser
  - If a phaser has 4 stages, it has 2 allpass filters so 2 attenuated bands

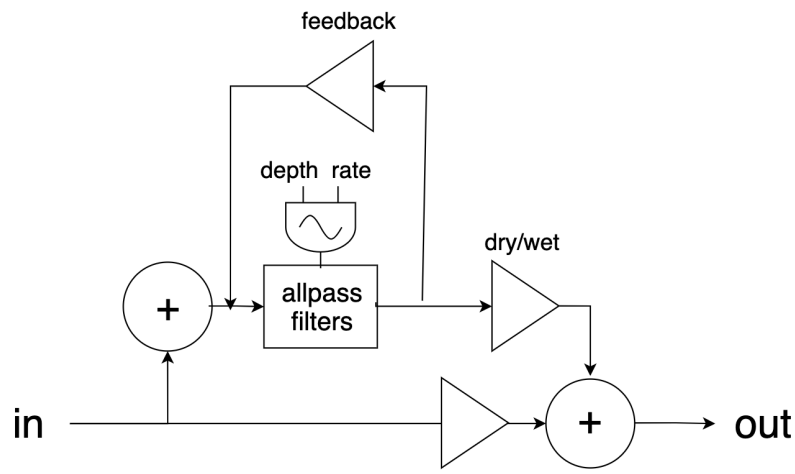

Phaser
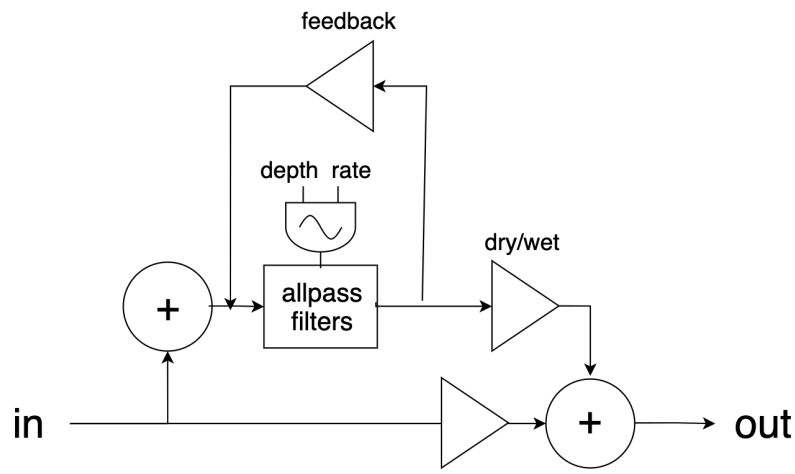
- Rather than using a delay line, we can instead use allpass filters
- This produces a similar effect; however, the frequency bands are not equidistant, and you can control the bandwidth of the bands with the filter's q
- By adding more allpass filters in series, you create more attenuation bands
  - This is usually called the stages of a phaser
  - If a phaser has 4 stages, it has 2 allpass filters so 2 attenuated bands