Building Filters (and delays)

Intro to Audio Tech 1
Jocelyn Kavanagh
Wednesday, November 5

Georgia Tech

Lesson Outline

- Filters and Delays in Max
- Up Next…

Georgia Tech

Filters in Max

- Max has a lot of prebuilt filter objects:
  - Onepole~
  - Biquad~
  - Reson~
  - Comb~
  - Allpass~

- However, we can construct our own filters using delays

Delay lines in Max

- Delay~
  - Delays a signal by a certain number of samples
- Tapin~ and Tapout~
  - Sets aside memory for the delay
  - Works well for continuously variable delay times
  - Delays a signal by a certain number of ms

- Why will these not work well for building filters?
  - Delay~ can delay 1 at a time, but it cannot handle feedback
  - Tapin~ and tapout~ can handle feedback, but their minimum delay is equal to the signal vector size

Gen~

- To work at the sample level with feedback/recursion, we can use a new set of “objects” in Max
- Low-level, “embedded code” in Max
- Lots of similar operators to normal Max, but everything can work at a sample level and is less “abstracted”

Gen~ Operators

- In and out
  - Passes continuous audio-rate signals though the gen~ patch
- Param
  - Passes messages from the main Max patch into gen~ (not at the sample level)
- History
  - Delays by one sample and allows feedback
- Delay
  - Like history but many samples delayed
- Clip
  - Limits a value between a min and max
- Accum (or +=)
  - Keeps a ”count” of incoming signals
- Mix
  - Crossfade between two signals

Georgia Tech

Back to Block Diagrams

- Block diagrams look a lot like Max patches
- Now that we have gen~, we can translate them *almost* directly

Y[n] = x[n] + b1*x[n-1]

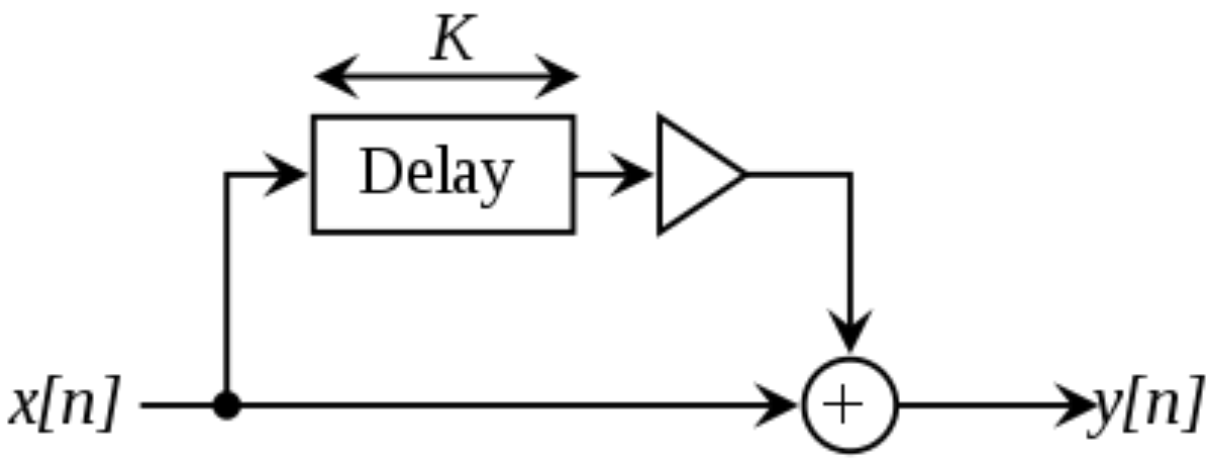

Back to Block Diagrams

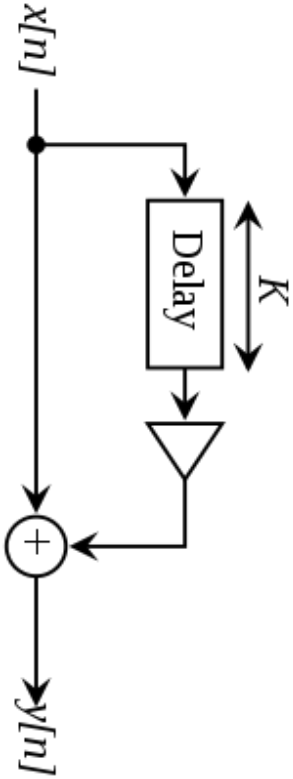

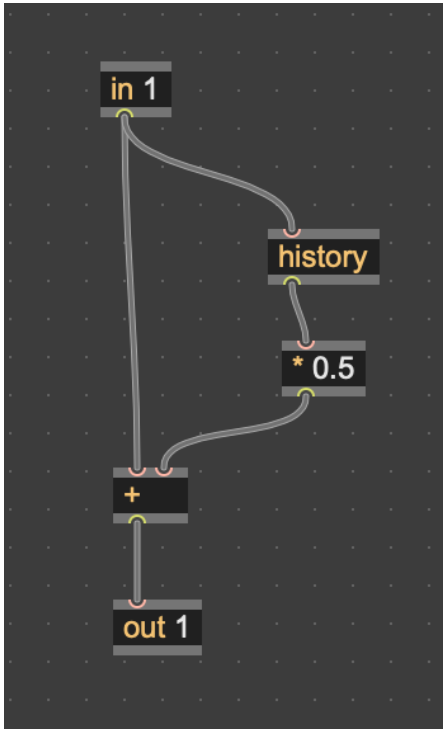

What about IIR

- Simple IIR filter -> single pole lowpass filter

$$Y[n] = (1-a)*x[n] + a*y[n-1]$$

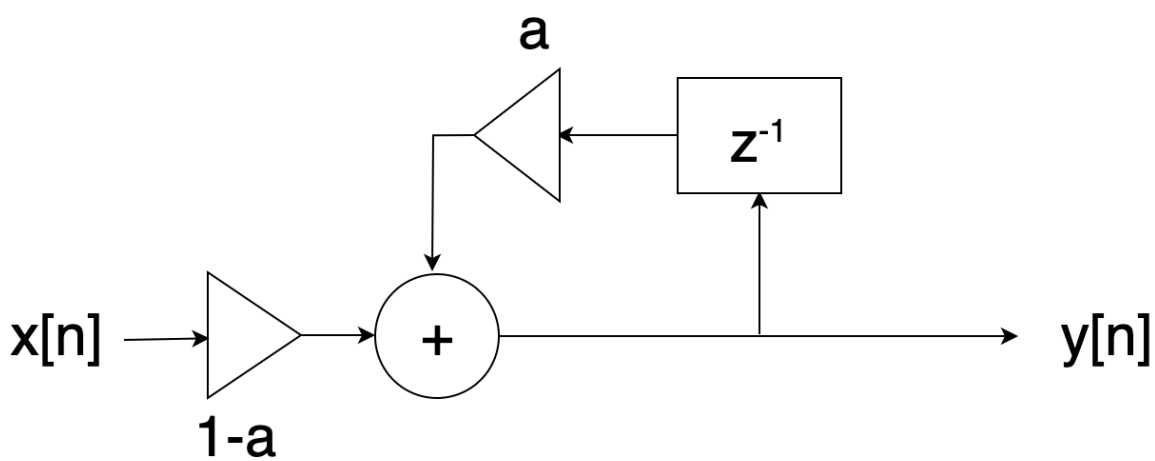

What about IIR

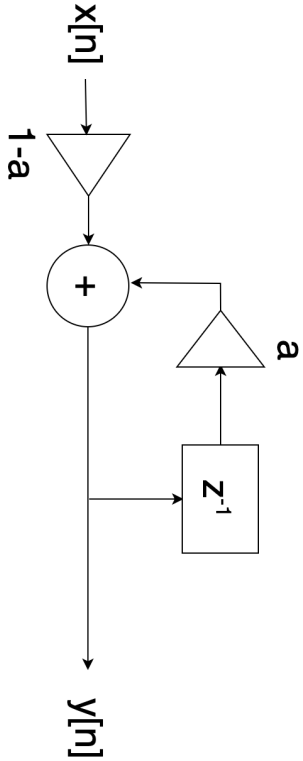

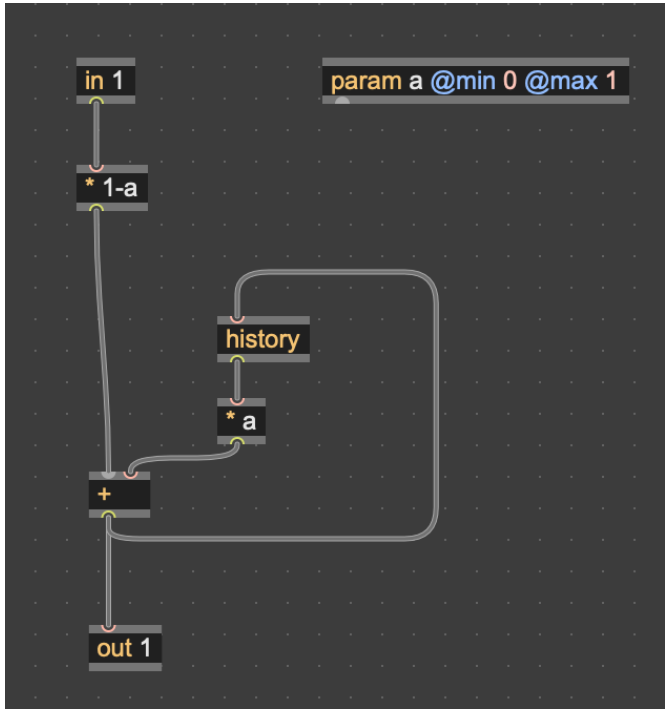

Rebuilding Biquad

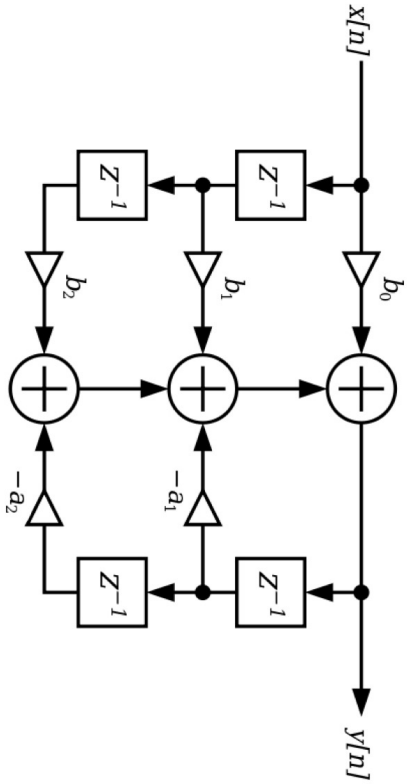

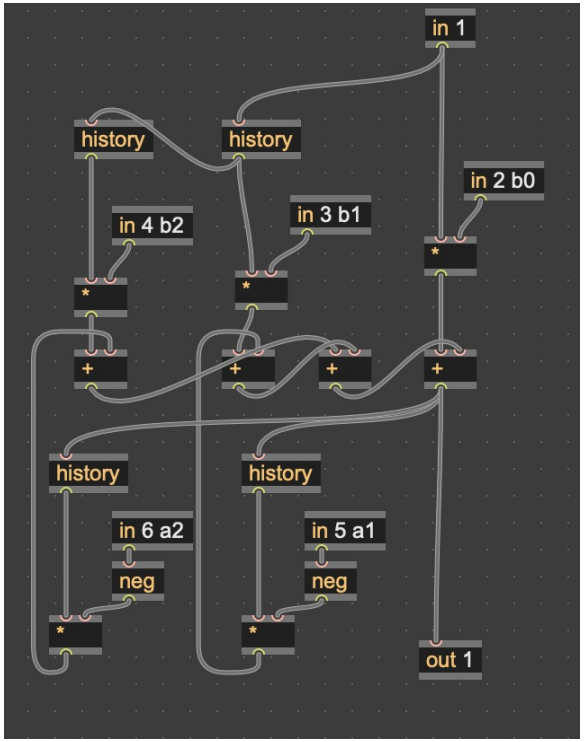

Topologies

- We can rearrange filters in a few different ways and get *mathematically* the same result
  - This is due to LTI's linearity so we can reorder sections of a filter as we refactor the math
- However, practically (and in the digital domain), these different implementations of the same filter have differences in output
- This is where building filters can become more intensive than just following the block diagram

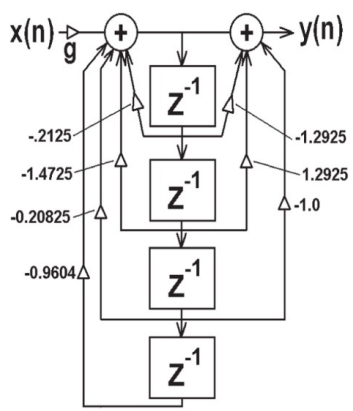

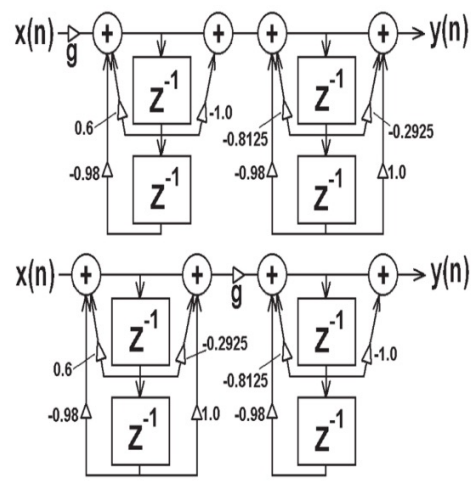

Connecting filters

- Often, we apply multiple filters to an audio signal (or an effect is built from multiple filters)
- If filters are connected in parallel, their outputs are summed (their transfer function)

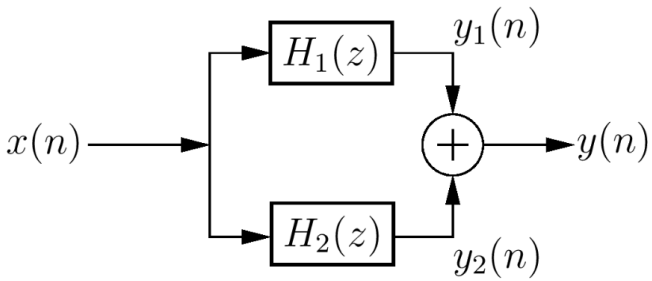

$$H(z) = H_1(z) + H_2(z)$$

- If filters are connected in series, their outputs are multiplied (their transfer function)

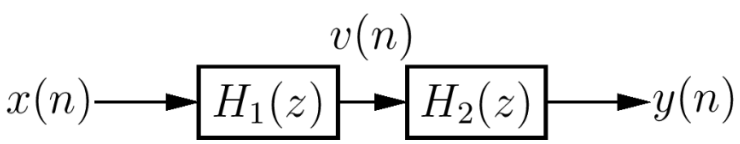

$$H(z) = H_1(z)H_2(z)$$

More filters: Comb and Allpass

- Comb and allpass filters are specific filter types that are often used to create delay-based audio effects
- Comb filters delay, add, and scale signals but their delay time does not live at the single sample level
- Allpass filters may not even seem like a filter at all. They delay all frequencies without changing amplitude – causing a phase shift

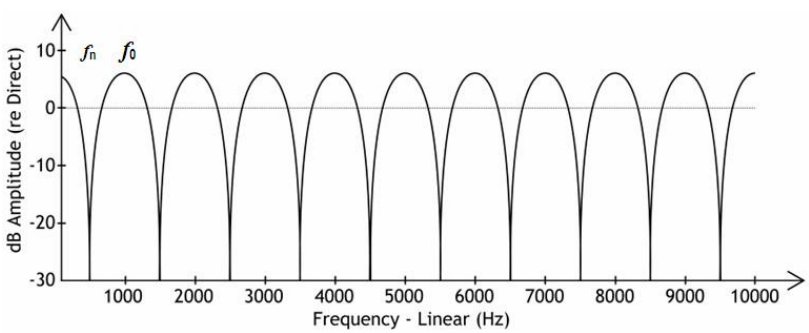

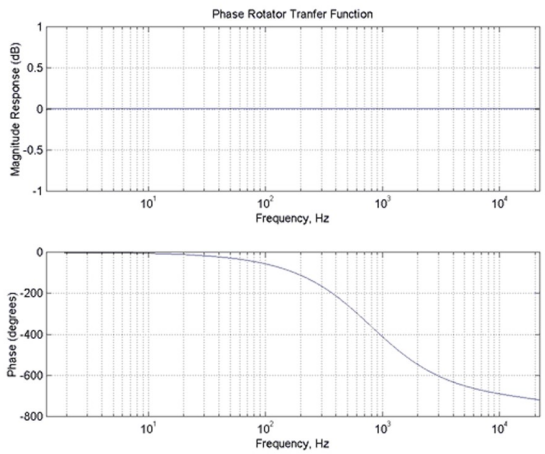

Comb filters

- Comb filters can be constructed as feedforward, feedback, and both feedforward/feedback filters
- When the delay time is less than ~10ms, we get phase cancellation that causes peaks/troughs at equally spaced frequencies
- When delay time is larger than ~10ms, we can hear those individual delays which sounds like an echo

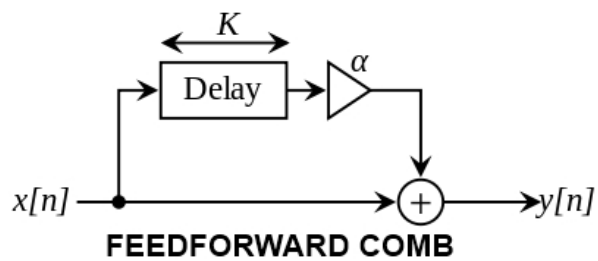

FEEDFORWARD COMB

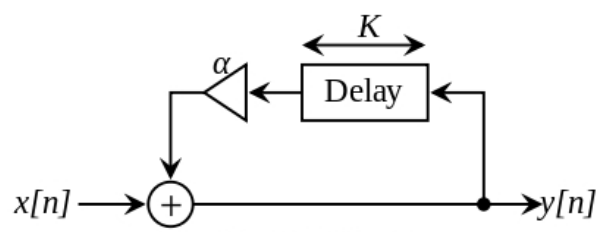

FEEDBACK COMB

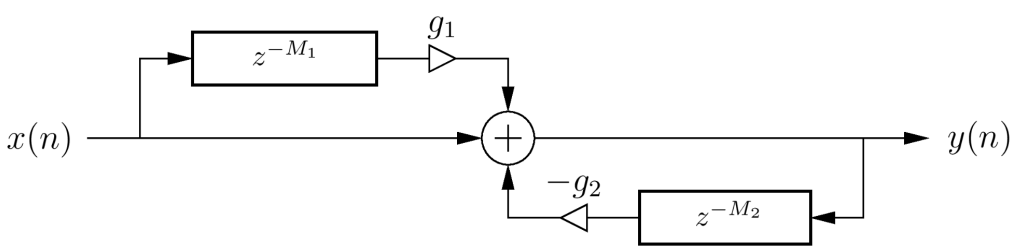

Comb filters

- In IIR comb filters, the delay time is the amount of time it takes to complete a feedback loop
- The inverse of the delay time is the resonant frequency of the filter
  - If delay time is 10ms, the resonant frequency is 100 Hz. So, you get peaks at harmonics of 100 Hz -> 100, 200, 300, 400, etc
- The feedback multiplier affects “how long the effect will last”. As the multiplier gets closer to 1, you will get more copies of the delayed sound

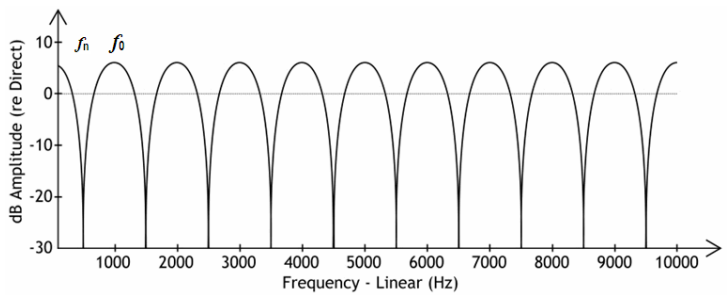

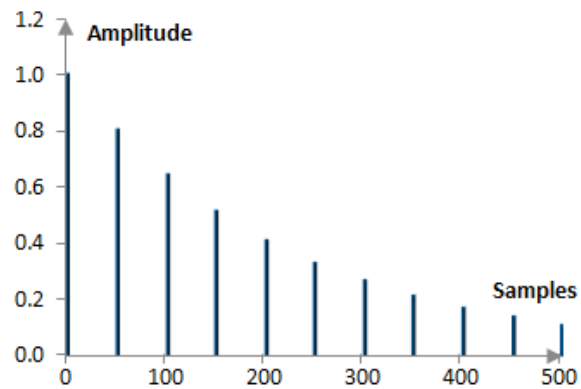

Allpass filters

- Allpass filters cause a frequency-dependent phase shift
- In time-changing signals, this can be heard as a coloration due to the phase cancellations, especially on transients
- At short delay times, you will get the phase cancellation, but the audible effects are smaller
- At long delay times, it will sound like a decaying echo

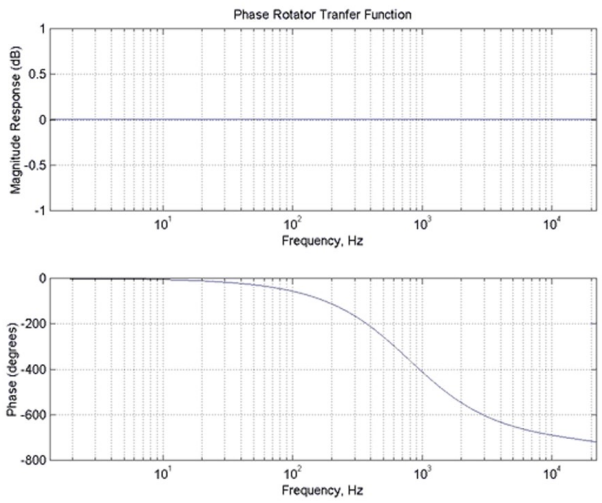

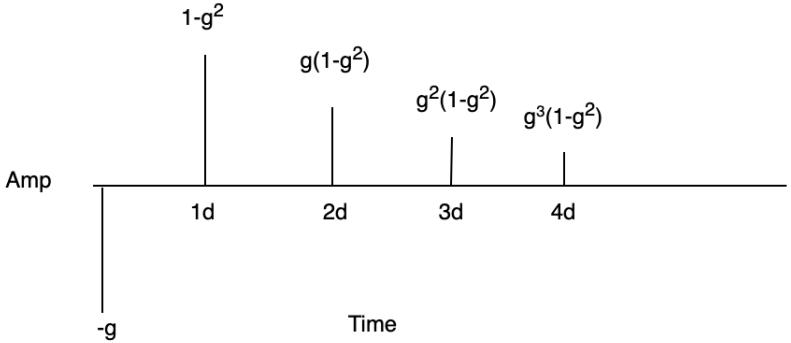

Allpass filters
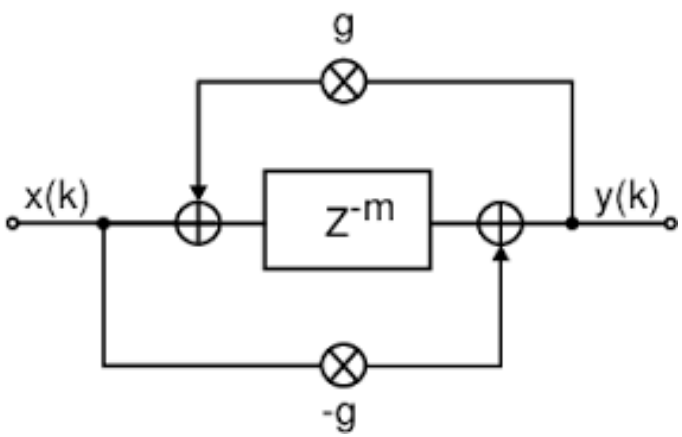
- There are multiple implementations of the allpass filter
- Below is the Schroeder allpass filter, also sometimes called a universal comb
- It combines the feedforward and feedback comb, but the positive/negative gain coefficients cancel each other out