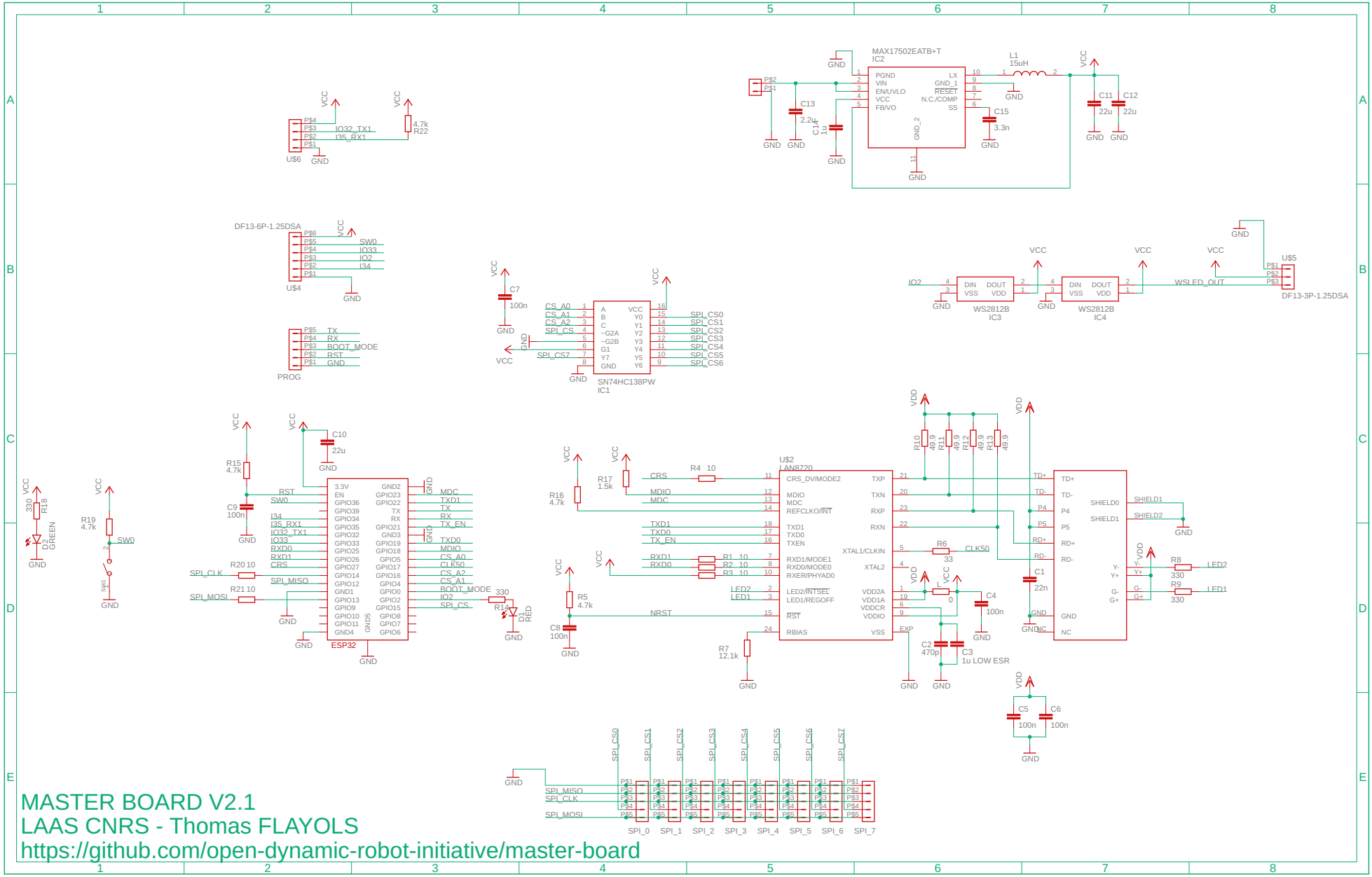

09/05/2020 16:21 f=0.60 /home/ada/git/master-board/hardware/V2/esp32_master_board.sch (Sheet: 1/1)