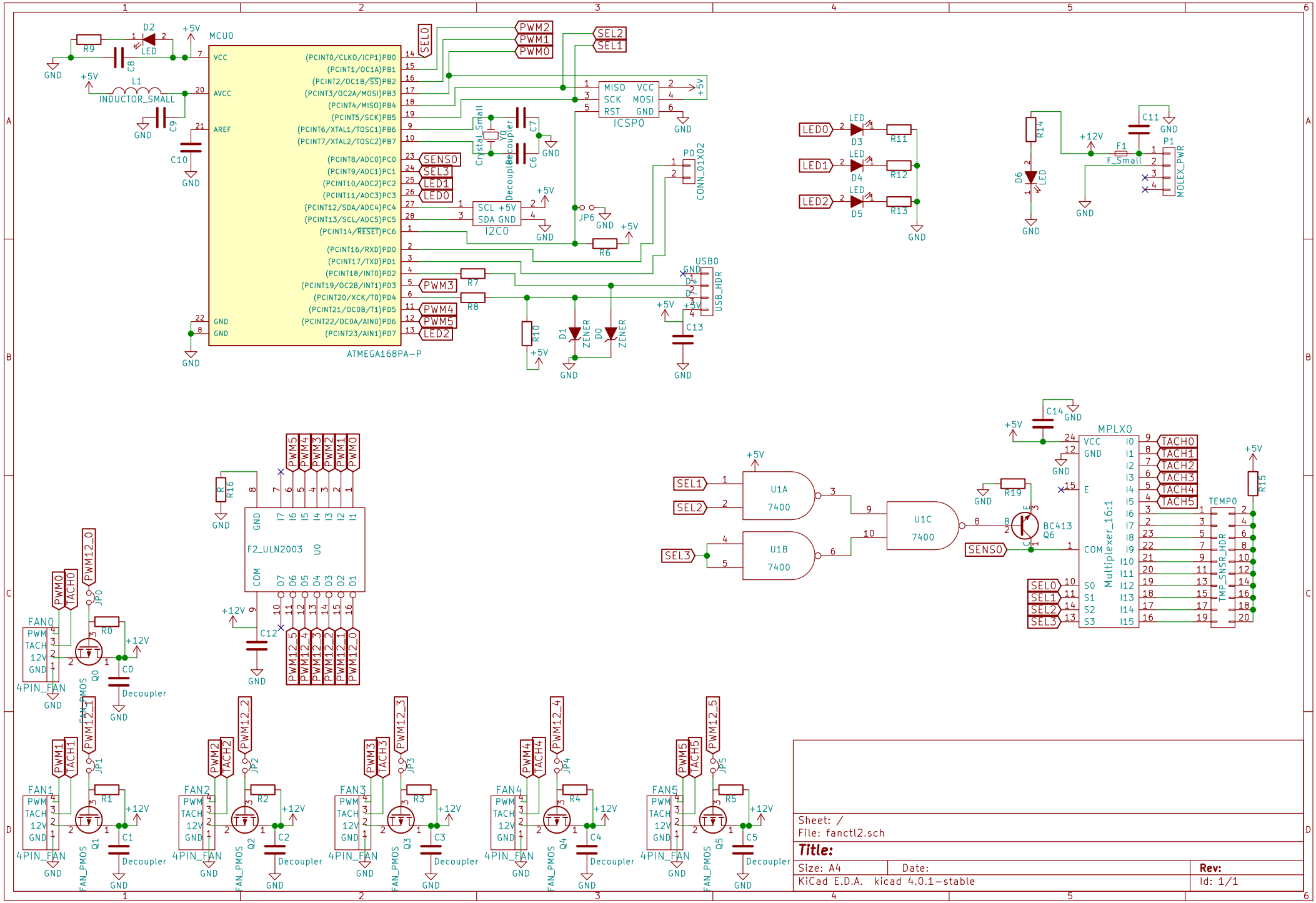
MCU0
ATMEGA168PA-P
VCC
AVCC
AREF
GND
(PCINT0/CLKO/ICP1)PB0
(PCINT1/OC1A)PB1
(PCINT2/OC1B/SS)PB2
(PCINT3/OC2A/MOSI)PB3
(PCINT4/MISO)PB4
(PCINT5/SCK)PB5
(PCINT6/XTAL1/TOSC1)PB6
(PCINT7/XTAL2/TOSC2)PB7
(PCINT8/ADC0)PC0
(PCINT9/ADC1)PC1
(PCINT10/ADC2)PC2
(PCINT11/ADC3)PC3
(PCINT12/SDA/ADC4)PC4
(PCINT13/SCL/ADC5)PC5
(PCINT14/RESET)PC6
(PCINT16/RXD)PD0
(PCINT17/TXD)PD1
(PCINT18/INT0)PD2
(PCINT19/OC2B/INT1)PD3
(PCINT20/XCK/T0)PD4
(PCINT21/OC0B/T1)PD5
(PCINT22/OC0A/AIN0)PD6
(PCINT23/AIN1)PD7
ICSP0
MISO VCC
SCK MOSI
RST GND
I2C0
SCL +5V
SDA GND
USB0
USB_HDR
CONN_01X02
MOLEX_PWR
LED0
LED1
LED2
SENS0
SEL0
SEL1
SEL2
SEL3
PWM0
PWM1
PWM2
PWM3
PWM4
PWM5
MPLX0
Multiplexer_16:1
TEMP0
TMP_SNSR_HDR
TACH0
TACH1
TACH2
TACH3
TACH4
TACH5
U1A
U1B
U1C
7400
BC413
F2_ULN2003
FAN0
FAN1
FAN2
FAN3
FAN4
FAN5
4PIN_FAN
FAN_PMOS
Decoupler
+5V
+12V
Sheet: /
File: fanctl2.sch
Title:
Size: A4
Date:
Rev:
KiCad E.D.A. kicad 4.0.1-stable
Id: 1/1