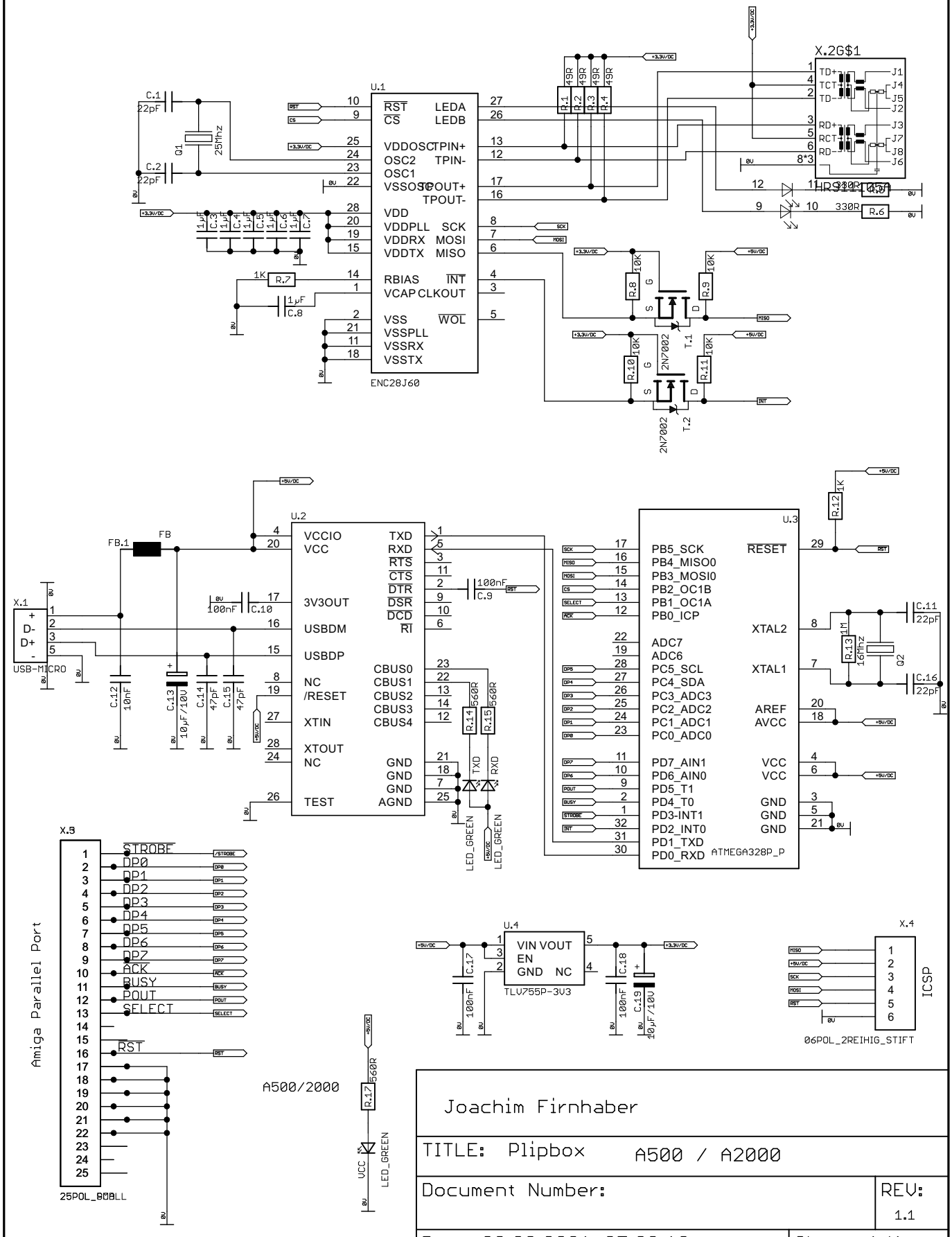
U.1
ENC28J60
RST
CS
LEDA
LEDB
VDDOSC
OSC2
OSC1
VSSOSC
TPIN+
TPIN-
TPOUT+
TPOUT-
VDD
VDDPLL
VDDRX
VDDTX
SCK
MOSI
MISO
RBIAS
VCAP
INT
CLKOUT
VSS
VSSPLL
VSSRX
VSSTX
WOL
X.2G$1
TD+
TCT
TD-
RD+
RCT
RD-
J1
J4
J5
J2
J3
J7
J8
J6
HRS330R
R.1
R.2
R.3
R.4
R.5
R.6
R.7
R.8
R.9
R.10
R.11
R.12
R.13
R.14
R.15
R.17
C.1
C.2
C.3
C.4
C.5
C.6
C.7
C.8
C.9
C.10
C.11
C.12
C.13
C.14
C.15
C.16
C.17
C.18
C.19
Q1
Q2
T.1
T.2
2N7002
U.2
VCCIO
VCC
3V3OUT
USBDM
USBDP
NC
/RESET
XTIN
XTOUT
TEST
TXD
RXD
RTS
CTS
DTR
DSR
DCD
RI
CBUS0
CBUS1
CBUS2
CBUS3
CBUS4
GND
AGND
X.1
USB-MICRO
FB.1
FB
LED_GREEN
U.3
ATMEGA328P_P
PB5_SCK
PB4_MISO0
PB3_MOSI0
PB2_OC1B
PB1_OC1A
PB0_ICP
ADC7
ADC6
PC5_SCL
PC4_SDA
PC3_ADC3
PC2_ADC2
PC1_ADC1
PC0_ADC0
PD7_AIN1
PD6_AIN0
PD5_T1
PD4_T0
PD3-INT1
PD2_INT0
PD1_TXD
PD0_RXD
RESET
XTAL2
XTAL1
AREF
AVCC
VCC
GND
X.3
Amiga Parallel Port
STROBE
DP0
DP1
DP2
DP3
DP4
DP5
DP6
DP7
ACK
BUSY
POUT
SELECT
RST
25POL_BUBLL
A500/2000
U.4
VIN
VOUT
EN
GND
NC
TLV755P-3V3
X.4
ICSP
06POL_2REIHIG_STIFT
Joachim Firnhaber
TITLE: Plipbox A500 / A2000
Document Number:
REV: 1.1
Date: 03.02.2021 07:33:13
Sheet: 1/1