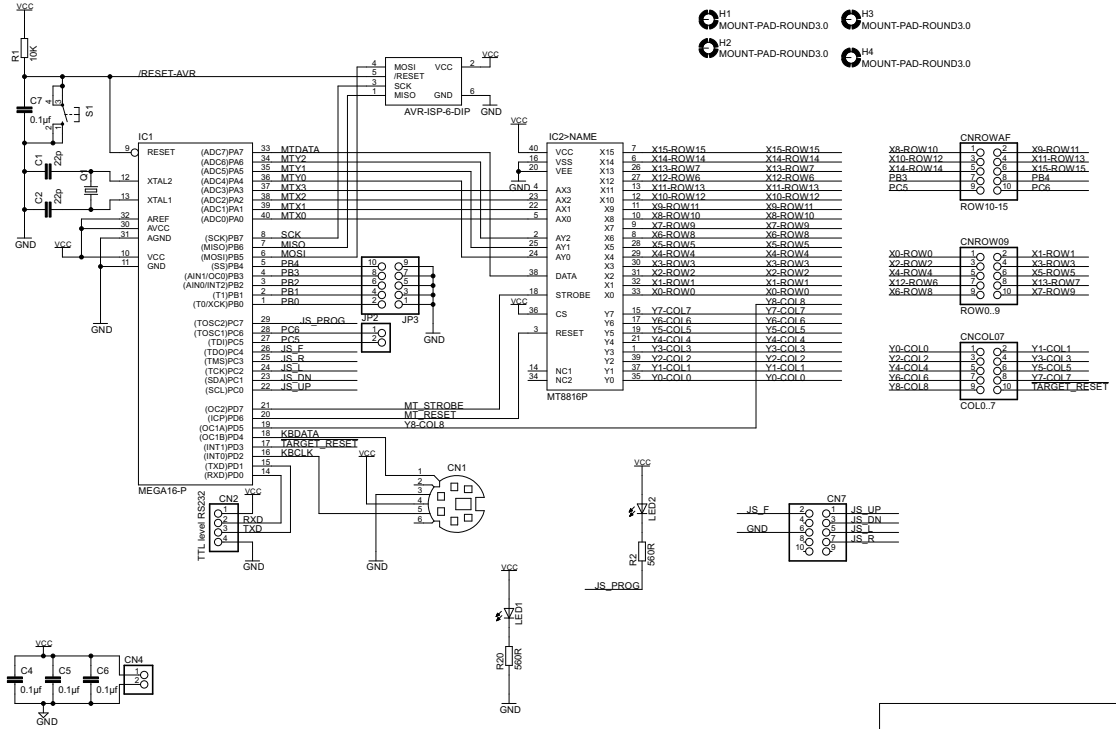

TITLE: PS2Kbd	
Document Number:	REV:
Date: 27/02/2021 16:58:24	Sheet: 1/1