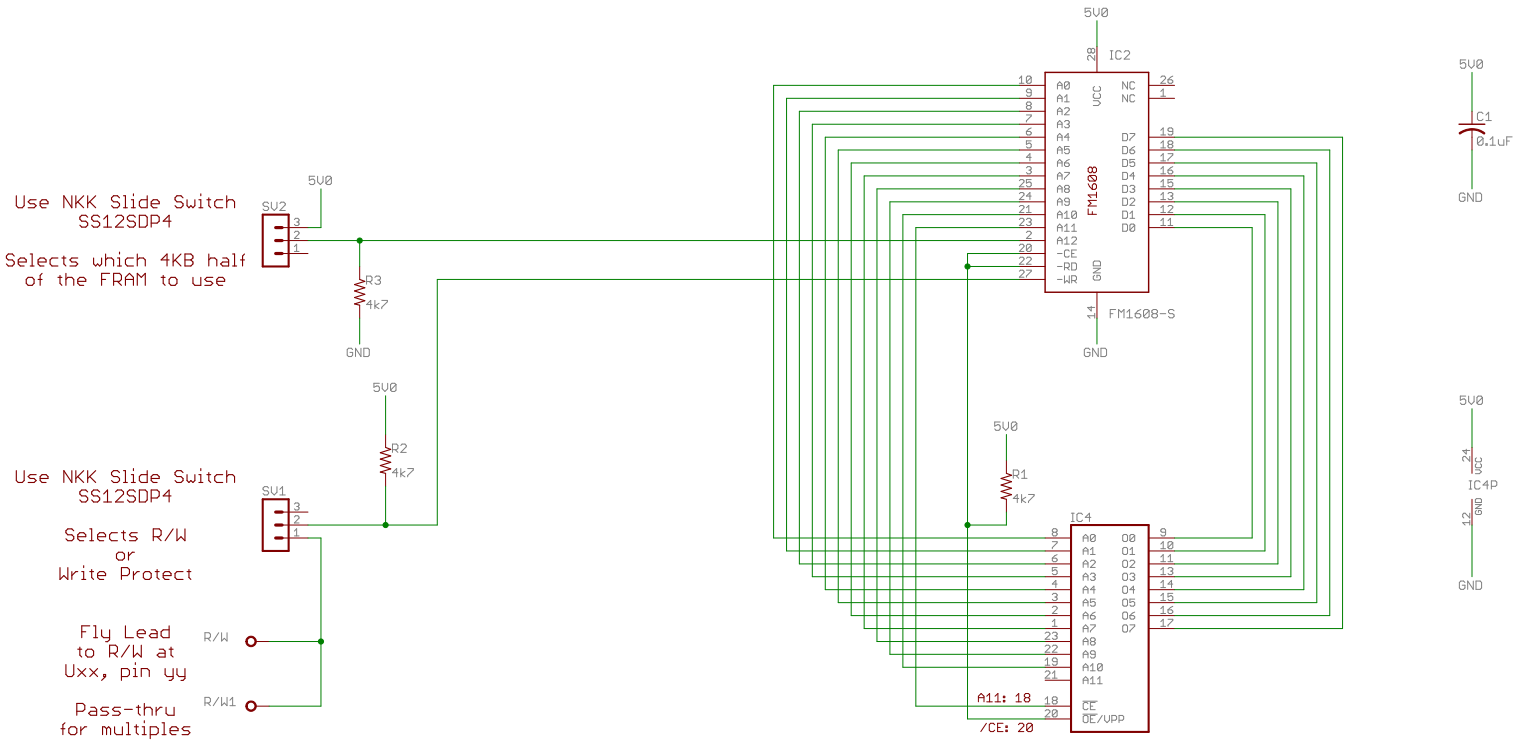


NOTE
2332 pinout is slightly different from 2732.
I didn't create a new 2332 part, but added annotations
describing the pin differences.
See the A11 and /CE notes next to the part above.

# AIM-65 Nonvolatile RAM replacement for 2332 ROMs

britt@shapetable.com
Copyright 2020

TITLE: AIM65_FRAM

Document Number:

REV:

Date: 11/1/20 17:12

Sheet: 1/1