Service Manual Roland SH-101

This file is a scan from the original service manual.
Never pay for a copy of this file. It should be available
for free!

SH-101 SERVICE NOTES *First Edition*

SPECIFICATIONS

Keyboard	32 key, F-scale
VCO	Range (16', 8', 4', 2') Pulse Width Modulation (50% ∿ 0%) Tune (±50 cent)
VCF	Cutoff Frequency (10Hz ∿ 20kHz) Key Follow (0 ∿ 100%)
ENV	Attack Time (1.5ms ∿ 4s) Decay Time (2ms ∿ 10s) Sustain Level (0 ∿ 100%) Release Time (2ms ∿ 10s)
Modulator	LFO/CLK RATE (0.1Hz ∿ 30Hz)
Controller	Portamento Time (0 ∿ 5s) Transpose (L/M/H)
Sequencer	100 steps max.
Output	Audio (0dBm max.) Phones (8Ω) Gate (OFF=0V, ON=12V) CV (1V/1 OCT, 0.415V ∿ 5V)
Input	Gate (+2.5V or more) CV (1V/1 OCT, 0 ∿ 7V) EXT CLK (+2.5 or more) DC (9V ∿ 12V)
Power	Drycells 1.5V x 6 or 9V ∿ 12V AC Adaptor
Power Consumption	1W
Dimensions	570(W) x 311(D) x 80(H)mm $22^{7}/_{16}$(W) x $12^{1}/_{4}$(D) x $3^{1}/_{8}$(H) in.
Weight	4.1 kg/9 lb. (without Drycells)

TOP VIEW

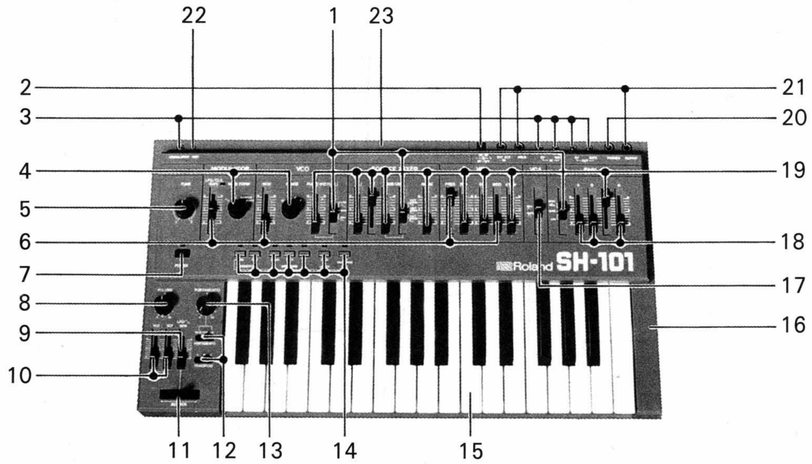

1.	Switch	SSB02358	(13159319)	12.	Switch	SLE-623-18P	(13139135)
2.	Jack	HEC0470-01-230	(13449706)	13.	Pot.	EVH-5XAP20A26-2MA	(13219275)
3.	Jack	HSJ0789-01-020	(13449611)	14.	Switch	KHD10901	(13169608)
4.	Switch	SRM1034-K15	(13119303)	15.	Keyboard	SK-331-AR	(004H014)
5.	Pot.	EVH-5XAP20B15-100KB	(13219242)	16.	Case	Panel (Cabinet)	(072H133)
6.	Pot.	S3018P405-100KA	(13339420)	17.	Switch	SSB022F3	(13159121)
7.	Switch	SUT113	(13129120)	18.	Pot.	S3018P405-1MA	(13339422)
	Button	TK-305	(12479225)	19.	Pot.	S3018P405-100KB	(13339421)
8.	Pot.	EVH-5XAP20A15-100KA	(13219274)	20.	Jack	HLJ0520-01-010	(13449126)
9.	Pot.	S2018P405-100KA	(13339328)	21.	Jack	HLJ0520-01-110	(13449125)
10.	Pot.	S2018P405-100KB	(13339329)	22.	Jack	HSJ0785-01-030	(13449409)
11.	Bender Unit	PB-5	(029H001)	23.	Case	Battery cover	(065H115)

- All rotary knobs (016H071)
- All LEDs GL-9PR2 (15029128)
- All slide knobs (016H057) yellow/(016H059) green/(016H060) orange

BOTTOM VIEW

How to Disassemble
Remove 2-TP screws and
10-P tight screws.

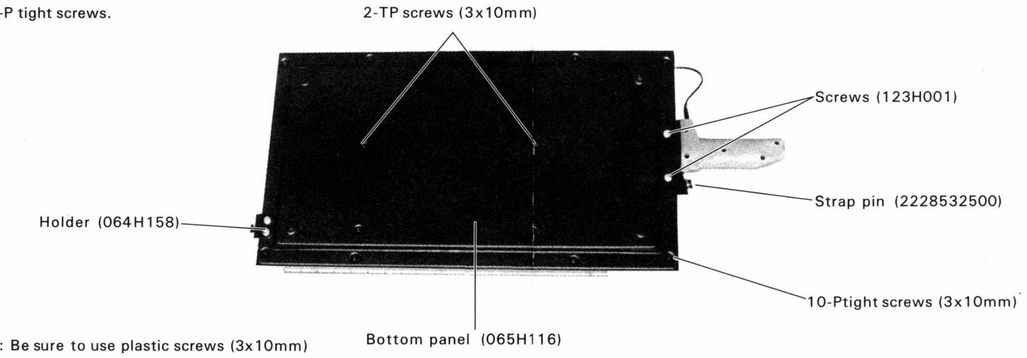

Note: Be sure to use plastic screws (3x10mm) when reassembling.

INNER PARTS LOCATION

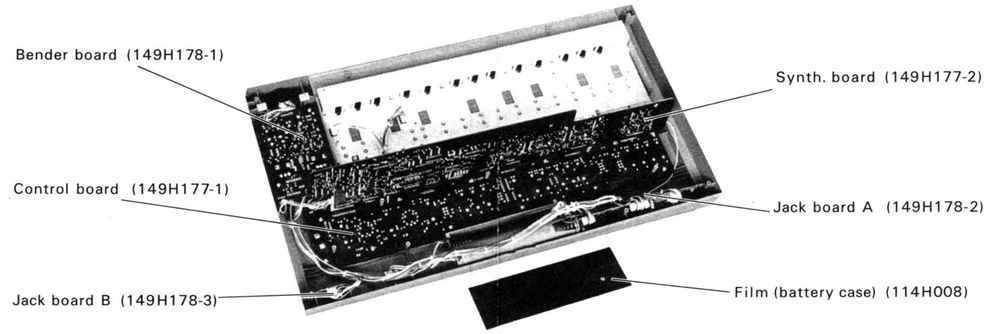

MGS-I

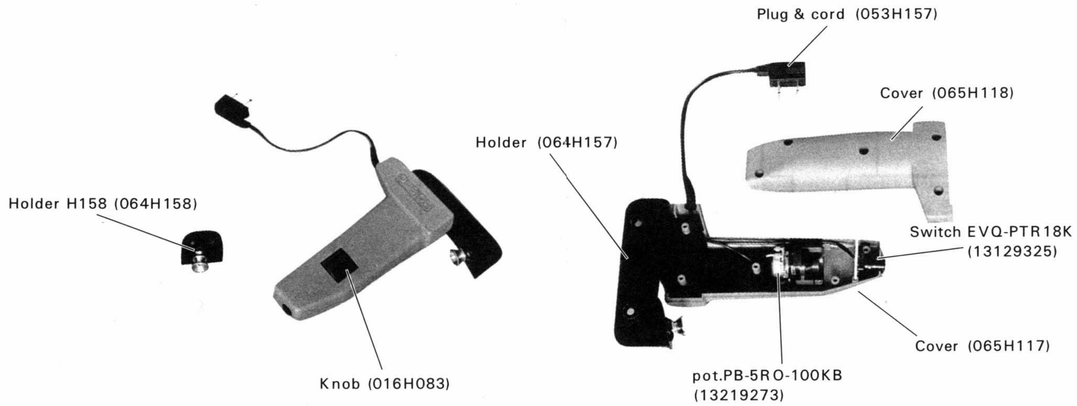

BLOCK DIAGRAM

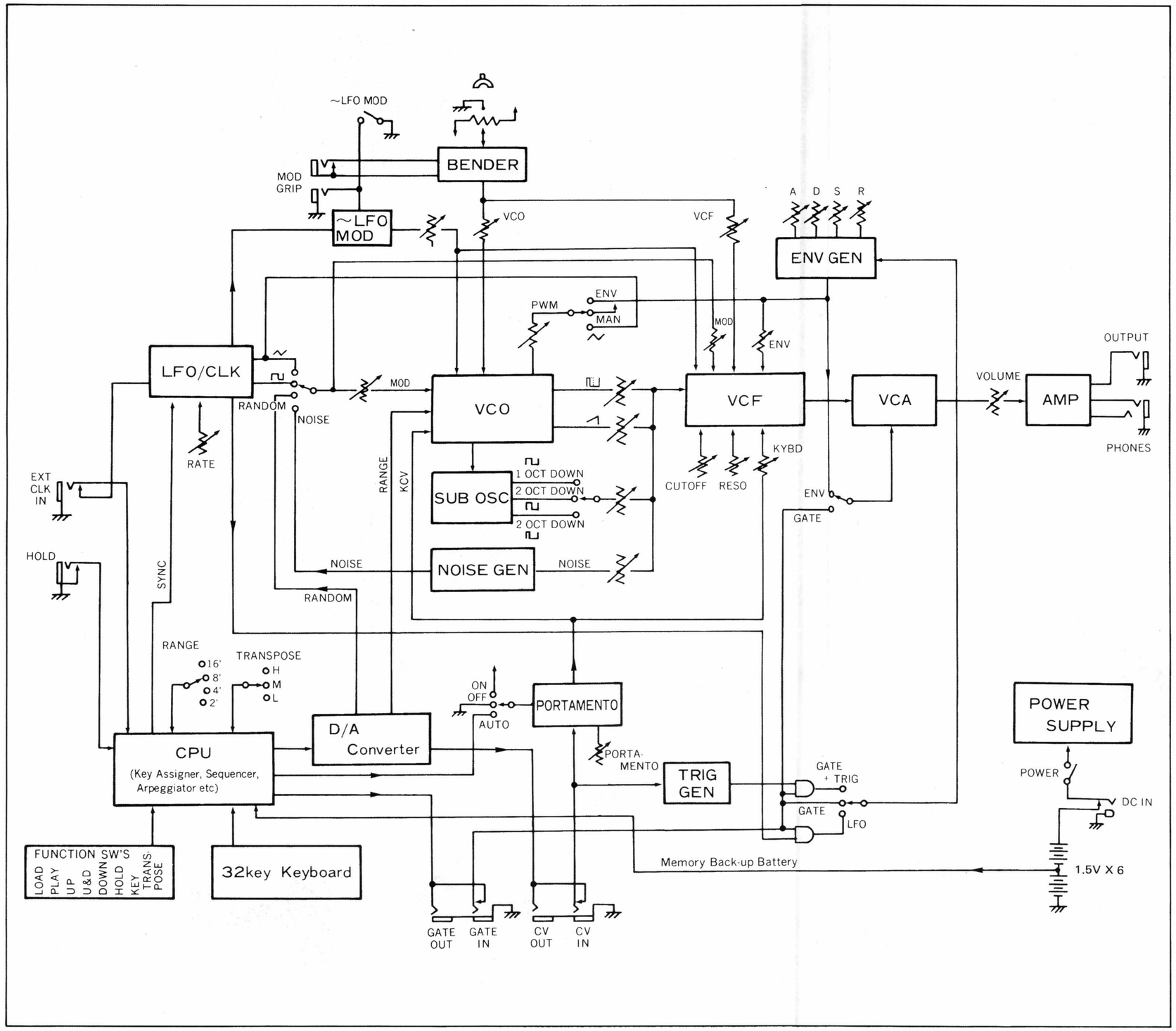

● CEM3340 BLOCK & CONNECTION DIAGRAM

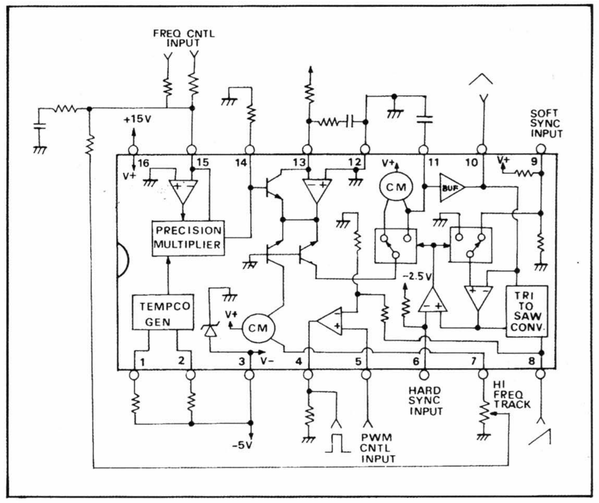

● KEYBOARD CIRCUIT DIAGRAM

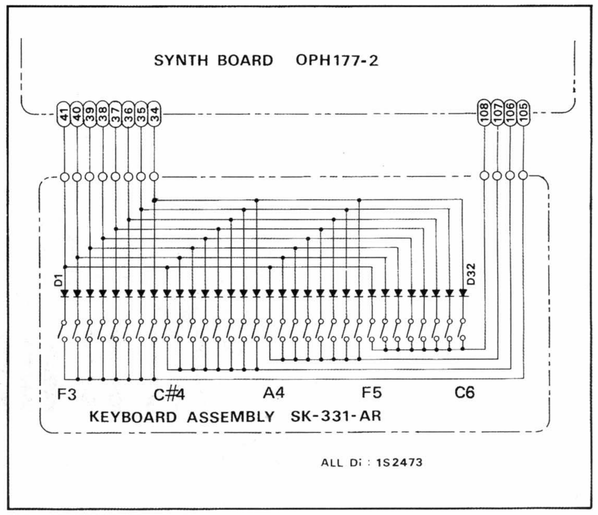

Technical Information

- Effective from SN-243200.
  The CPU may overrun if excessive static electricity is fed through the jacks, etc. To prevent this, the GND of the GATE OUTPUT jack on the Jack Circuit Board and the GND lug on the Keyboard are connected with a larger wire.
  It is advisable that this precautionary measure also be applied to the models prior to SN-243200.
- If there is an improper connection in the Keyboard keys, clean the contact (foil pattern) on the side of the Switch P.C. Board with alcohol.

NOV. 1st, 1982

CPU PROGRAM

The CPU 80C49-6-7301 controls the various modes and functions of the SH-101 through a series of programmed steps, as shown in the attached flow chart. These actions are described below.

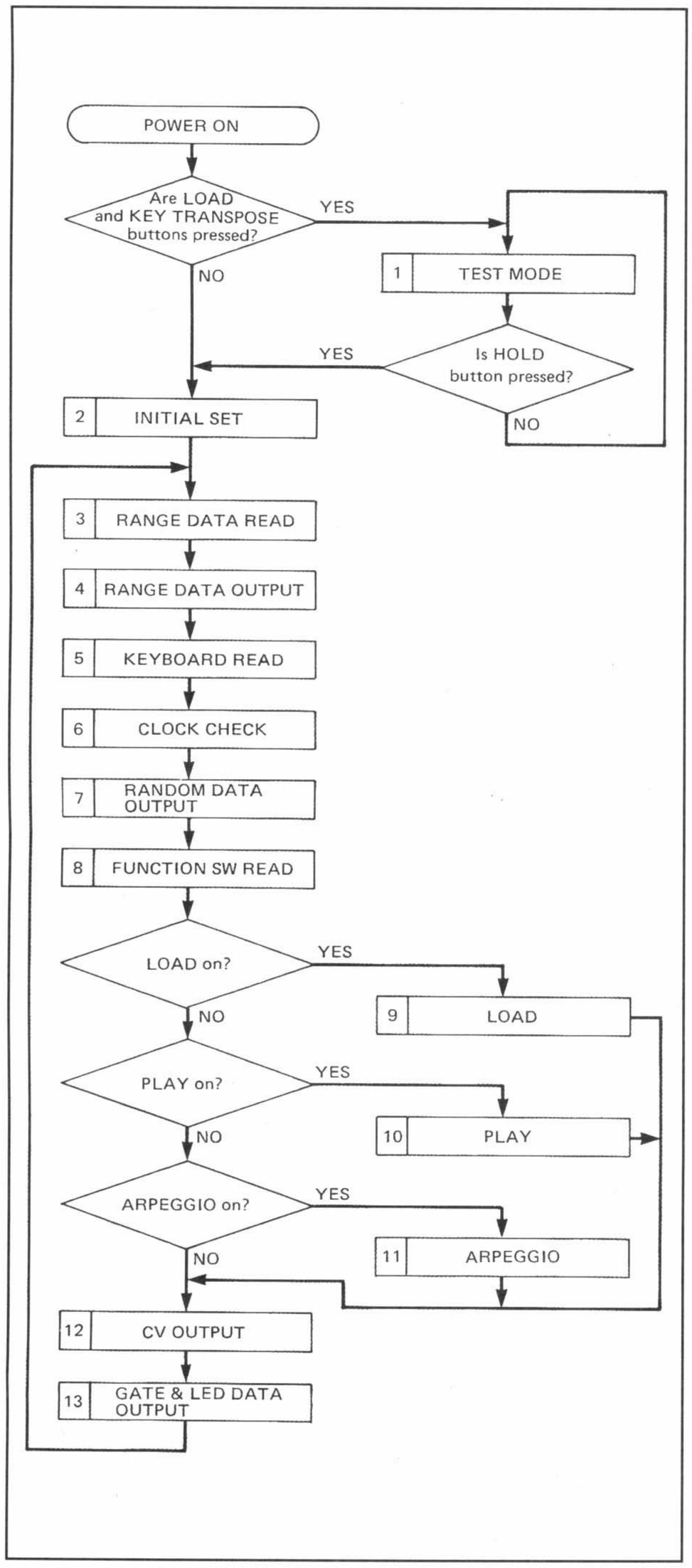

Note:

Steps 3 through 13 are a series of program steps that are sequentially executed by the CPU at 1.5 to 3.5msec intervals. The CPU can modify this sequence any time new data is input.

1. TEST MODE

The Test mode allows easy adjustment of the SH-101. To enter the Test mode, first turn the power switch Off. This is necessary as the Test mode cannot be entered while the SH-101 is in any of the normal operating modes. Now simultaneously press both the LOAD and KEY TRANSPOSE buttons and turn the power switch On. The CPU sets the voltage at the KCV and at the Range to zero and turns the Gate Off. The unit is now in the Test Mode. The voltage values at the KCV and the Range, and the status of the Gate change in each of the function modes listed below.

Function Button	KCV	Range	Gate
PLAY	2.75V	0V	Off
ARPEGGIO DOWN	2.5V	0V	Off
ARPEGGIO U&D	4.75V	0V	On
ARPEGGIO UP	0V	4.75V	On
LOAD	0V	0V	Off

To enter a normal mode, either press the Hold button down, or turn the power switch Off and then back On again.

2. INITIAL SET

The CPU performs Initial Set when the power switch is turned On or when the HOLD button is pressed during the Test mode. This operation deletes all the data that is stored in the built-in RAM, such as Keyboard and switch mode data, but does not delete the Sequencer data.

3. RANGE DATA READ

The CPU reads and memorizes the positions of the VCO Range, TRANSPOSE (L, M and H) and GATE/TRIG (LFO) switches.

4. RANGE DATA OUTPUT

The CPU sends the VCO Range data (read in Step 3) to the D/A Converter where it is converted into analog-equivalent values.

Range Selector	Range Data
16′	1V
8′	2V
4′	3V
2′	4V

If the CPU contains Key Transpose data (stored during step 8 of the previous program execution), the Key Shift data is added to the Range Selector data. For example, if the user selects the lowest F-key and sets the Range Selector to 16′, the Range data value will be 0.417V. Likewise, if the user selects a higher C-key and sets the Range Selector to 2′, the Range data value will be 5V.

5. KEYBOARD READ

The CPU uses a 4 x 8 matrix to read the number and position of the keys being pressed on the keyboard, and determines the output priority of the CV data and whether new Gate signal should be output according to the key mode (LEGATO or NON-LEGATO) and the settings of the panel controls (PORTAMENTO, ARPEGGIO, GATE/TRIG, etc.)

6. CLOCK CHECK

Any variation in the voltage of the Clock signal (LFO or EXT CLK) is detected at the T1 terminal. If a low Clock signal turns high, TR11 inverts it to low and sends it to the CPU, which then performs the following operations.

(a) Generates Random data.

(b) Prepares the data for Arpeggio and Sequencer playing.

7. RANDOM DATA OUTPUT

The CPU outputs to the D/A Converter the random data generated and stored in step 6(a).

8. FUNCTION SWITCH READ

The CPU scans all the function switches in order to detect any changes made by the user. If an On/Off change is detected, the CPU jumps to the appropriate step.

Refer to the flow chart. The CPU can detect the On/Off status of the HOLD function at both the Panel button and the Pedal switch. When the KEY TRANSPOSE button is pressed and a new key selected, the CPU identifies the key that was pressed on the keyboard and thus identifies the key (pitch) to be transposed.

9. LOAD

If a Keyboard key, the LEGATO (HOLD) button or the REST (KEY TRANSPOSE) button is pressed, the CPU stores that information in the RAM, then jumps to step 12. If no key or button is pressed, the CPU jumps directly to step 12.

10. PLAY

In the Play mode, the CPU reads the Sequencer data stored in the RAM and prepares both the KCV and Gate data, then jumps to step 12.

11. ARPEGGIO

If the CPU detects during step 6 that the Clock signal has turned high, the CPU prepares the KCV data according to the order of the key numbers stored in the 4-byte (32 keys) Arpeggio Key Buffer, then jumps to step 12. If the Clock Signal remains low, the CPU jumps directly to step 12.

12. CV OUTPUT

During the Arpeggio and Sequencer Play modes, the CPU sends to the D/A Converter the necessary CV data for executing the relevant steps for Arpeggio or Sequencer playing. During all other modes, the TRANSPOSE Switch data (L, M or H) is either added to or subtracted from the Keyboard information, and the resulting value is sent to the D/A Converter. Examples of this operation are shown below.

Transpose Switch Position	Key	CV Data (After D/A Conversion)
L	Lowest F	0.417V
M	Lowest F	1.417V
H	Lowest F	2.417V
H	Highest C	5.0V

13. GATE & LED DATA OUTPUT

Port 2 of the CPU outputs the Gate, Clock Reset (CLK RST) and LED Illumination signals. The Clock Reset signal resets the Clock signal whenever a key on the keyboard is pressed while either the GATE/TRIG Selector is set to LFO or the ARPEGGIO mode is activated. The LED Illumination signal illuminates the LEDs above the function switches, but does not illuminate the LEDs for the LFO and powerswitches.

At the end of step 13, the CPU returns to program 3 and repeats the sequence of steps from 3 through 13.

• PIN CONNECTION (Top View)

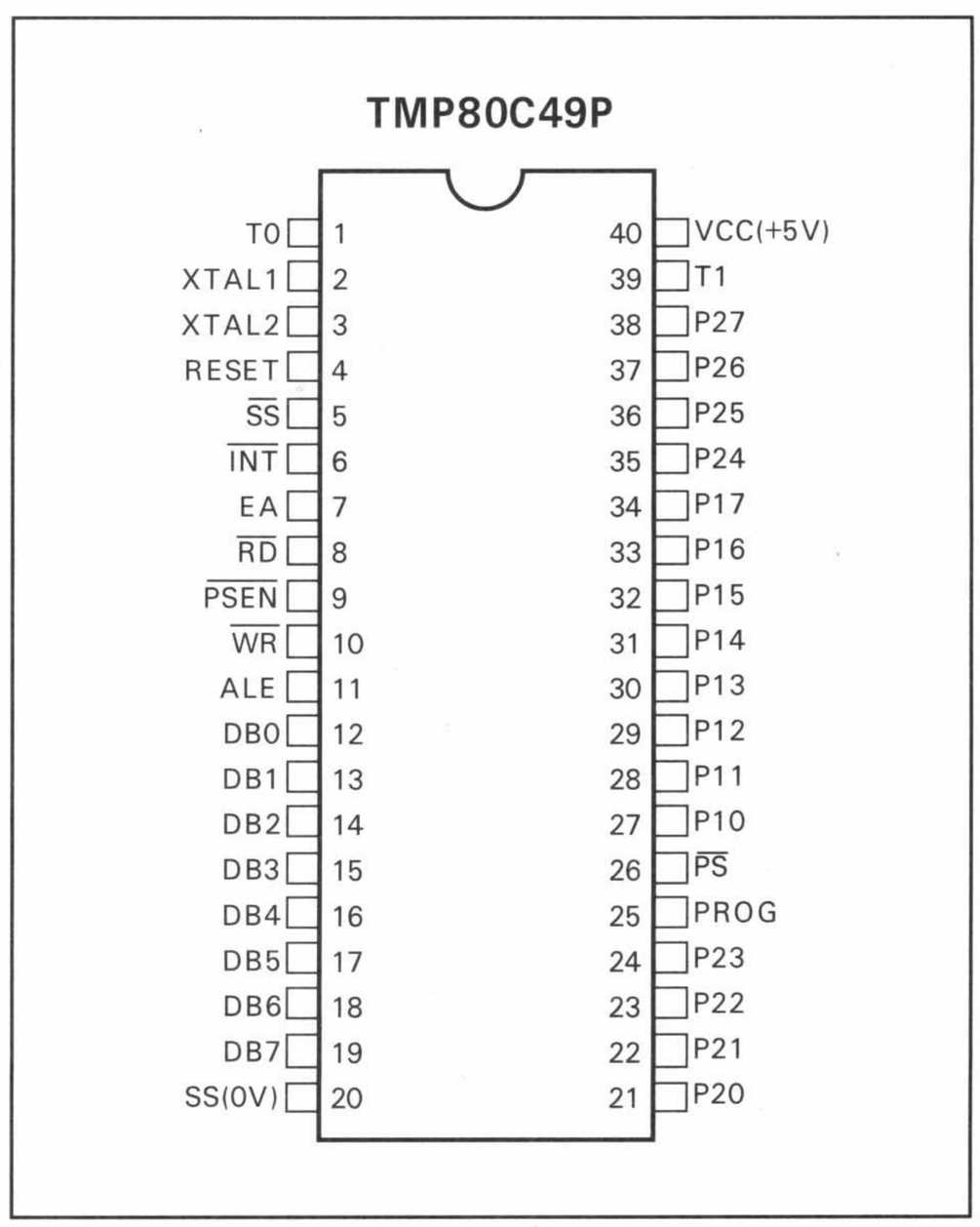

ADJUSTMENT PROCEDURES

Precautions:

The order of the adjustment procedures in these adjustment specifications were determined assuming that the SH-101 unit has not been adjusted at all. Therefore, when only a few sections are to be adjusted, please keep the following points in mind.

- When adjusting the VCO Width, VCO Tune, and/or VCF, be sure that the D/A Converter adjustment has first been completed. (This is because D/A Converter failure may affect these circuits.)
- Because the VCO Width and the VCO Tune interact with each other, be sure to perform both adjustments.

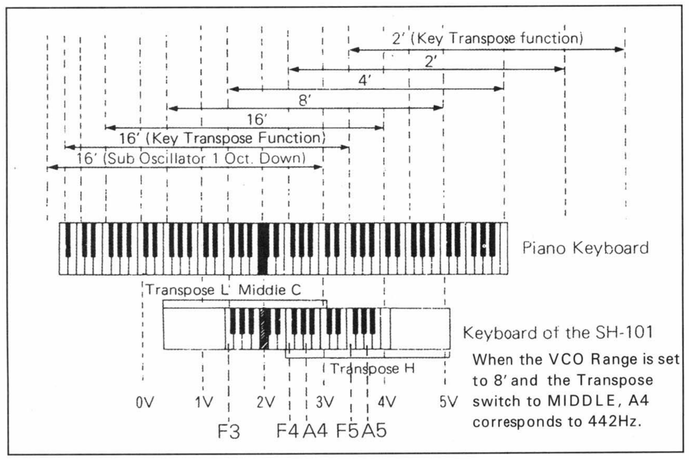

1. D/A CONVERTER ADJUSTMENT

Preparations:

- Connect the digital voltmeter (with more than 4 significant digits) to the CV OUT jack.
- While pressing both the LOAD button and the KEY TRANSPOSE button on the SH-101 unit, turn the Power Switch On. (The SH-101 unit is now in the Test mode.)

(A) D/A Tune

1. Confirm that the LOAD and TRANSPOSE LEDs are illuminated.
   If any of the LEDs other than the LOAD LED is illuminated, press the LOAD button.
2. Adjust VR-2 (D/A TUNE) on the Synth. Circuit Board until the digital voltmeter reads 0V ± 1mV.

(B) D/A Width (+5V)

1. Press the PLAY button.
2. Adjust VR-1 (+5V) on the Synth. Circuit Board until the digital voltmeter reads 2.75V ± 1mV.

(C) D/A Linearity

1. Press the ARPEGGIO DOWN button.
2. Adjust VR-3 (D/A LINEAR) on the Synth. Circuit Board until the digital voltmeter reads 2.5V ± 1mV.

(D) Repeat the above procedures (A) through (C) until all the voltage readings are within ±1mV of the specifications.

2. VCO ADJUSTMENT

Preparations:

- If the unit is in the Test mode, release the mode by either pressing the HOLD button or resetting the Power Switch to On.
- Set the panel controls as shown in Fig. 1.
- Connect the oscilloscope to SH-101 OUTPUT. Supply the reference F note (based on A = 442Hz) to the scope EXT. Input for the Lissajous figure.

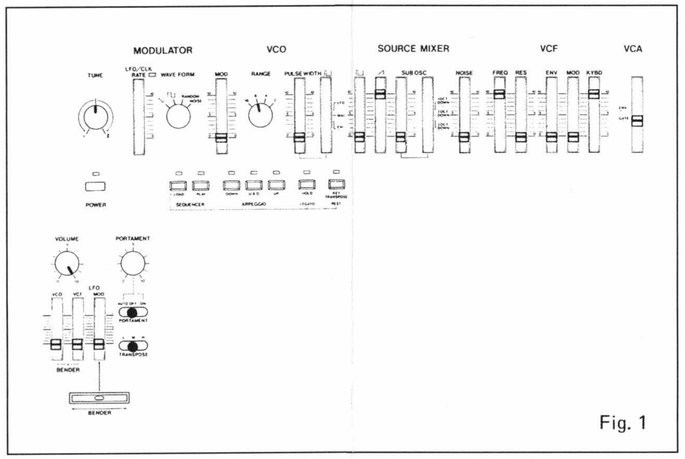

Fig. 1

Note:

To compensate for the variations of the components, the VCO Tune Circuit is designed so that a +15V voltage can be supplied or inhibited. (The position is shown in the circuit diagram with the ⬍ mark.)
If the adjustment cannot be properly performed by adjusting VR-7, short-circuit the break in the pattern on the back of resistor R102. If it is already bridged or wired, open it.

(A) VCO Width

1. Hold the F5 key down, and adjust either VR-7 (VCO TUNE) or VR-9 (TUNE) until the Lissajous figure is motionless.
2. Hold the F3 key down, and adjust VR-6 (VCO WIDTH) until the figure is again motionless.
   The F5 pitch will vary as VR-6 (VCO WIDTH) is turned.
3. Repeat steps 1 and 2 until the F3 and F5 figures are motionless.

(B) VCO Tune

1. Place the unit in the Test mode. (While pressing both the LOAD button and the KEY TRANSPOSE button, turn the Power Switch On.)
2. Press the U & D button.
3. Confirm that VR-9 (TUNE) is set in the center position.
4. Adjust VR-7 (VCO TUNE) until the output value is 442Hz.

(C) Range Width

1. Place the unit in the Test mode
2. Press the U & D button.
3. Press the UP button, and adjust VR-5 (RANGE WIDTH) until the output pitch is the same as the output pitch in the U & D mode.

(D) Pulse Width

1. Set the WAVEFORM to ⊓⊔.
2. Adjust VR-2 (D/A TUNE) until the mark/space ratio is 1:1.

3. VCF ADJUSTMENT

Preparations:

- Set the panel controls as shown in Fig. 2.
- Connect the oscilloscope to the SH-101 OUTPUT.

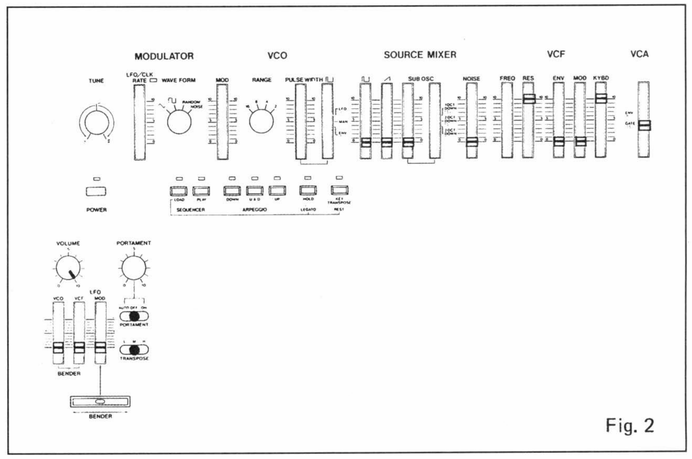

Fig. 2

1. Hold the A4 key down, and set the CUTOFF FREQ. for approximately 1kHz.
2. Alternately, play the F4 and F5 keys, and adjust VR-8 (VCF WIDTH) until the F5 figure cycle is twice the F4 cycle.

4. LFO MOD OFFSET

Preparation:

- Connect the digital voltmeter to test points TP-1 and TP-2 on the Bender Circuit Board as shown in Fig.3.

1. Adjust VR-3 (D/A LINEAR) until the voltmeter reads 0 ± 2mV

Note:

The adjustment can be performed from the direction of the foil pattern.

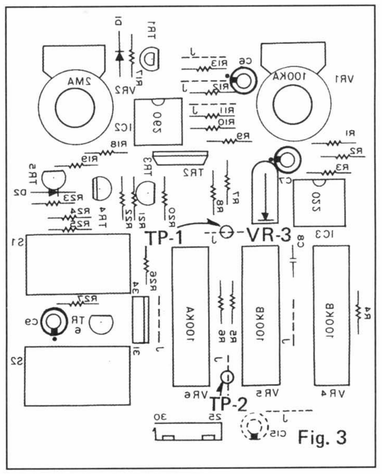

Fig. 3

CIRCUIT DIAGRAM & CIRCUIT BOARD DIAGRAM

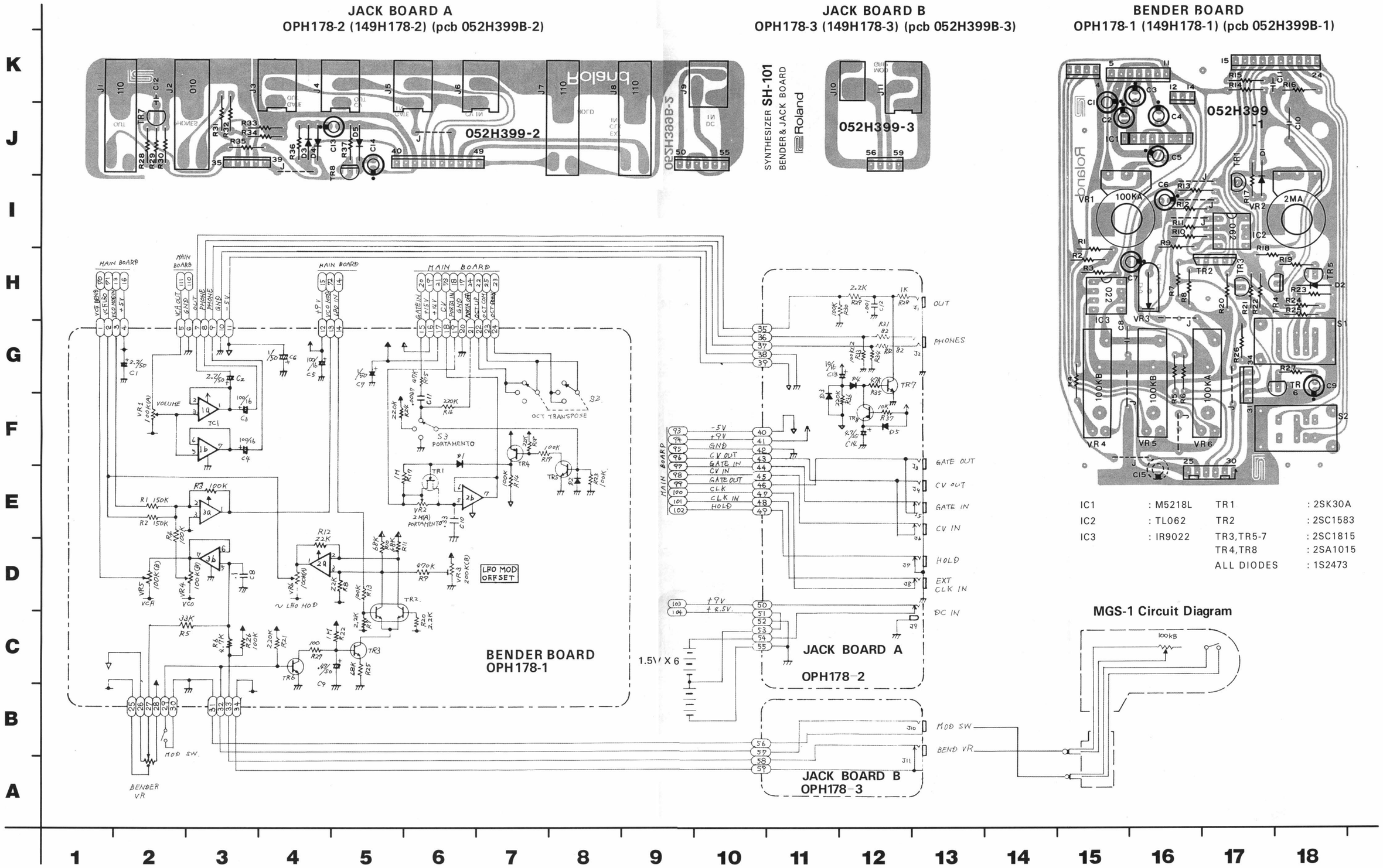

IC1	: M5218L	TR1	: 2SK30A
IC2	: TL062	TR2	: 2SC1583
IC3	: IR9022	TR3,TR5-7	: 2SC1815
		TR4,TR8	: 2SA1015
		ALL DIODES	: 1S2473

CIRCUIT BOARD DIAGRAM

CONTROL BOARD View from foil side

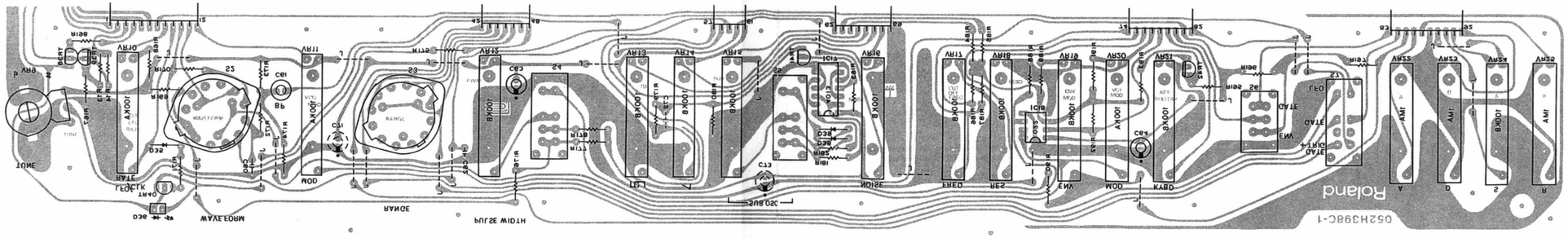

CONTROL BOARD OPH 177-1 (149H 177-1) (pcb 052H398C-1)

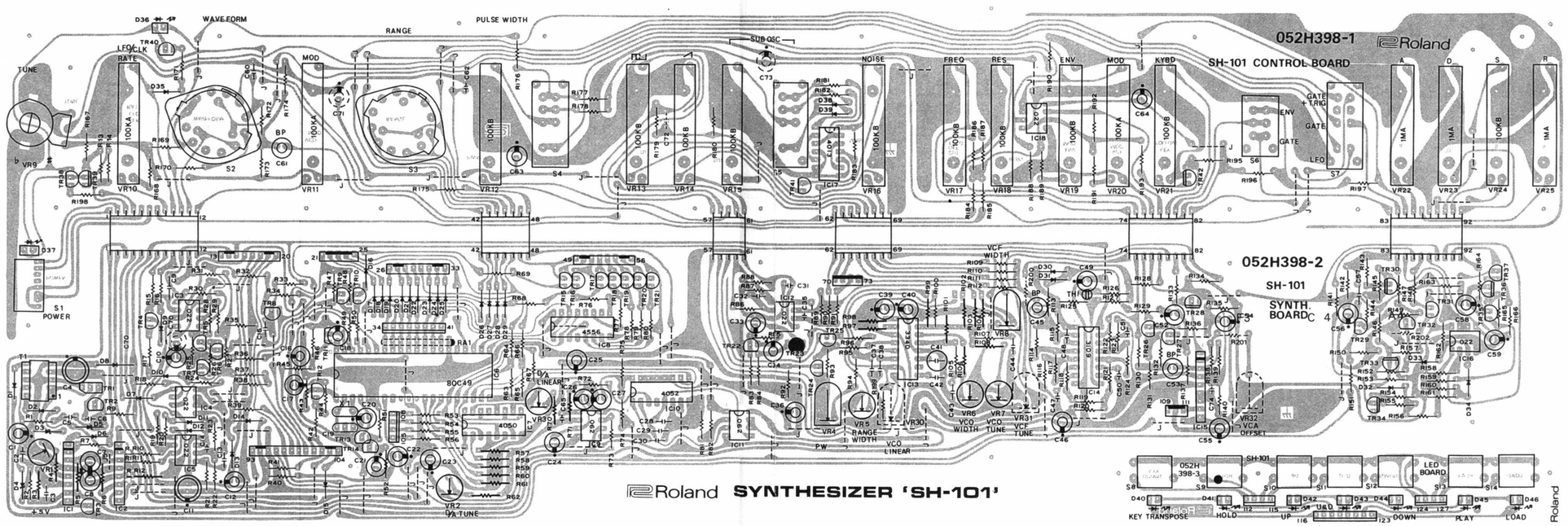

SYNTH BOARD
OPH177-2 (149H177-2) (pcb 052H398C-2)

SWITCH BOARD
OPH177-3 (149H177-3) (pcb 052H398C-3)

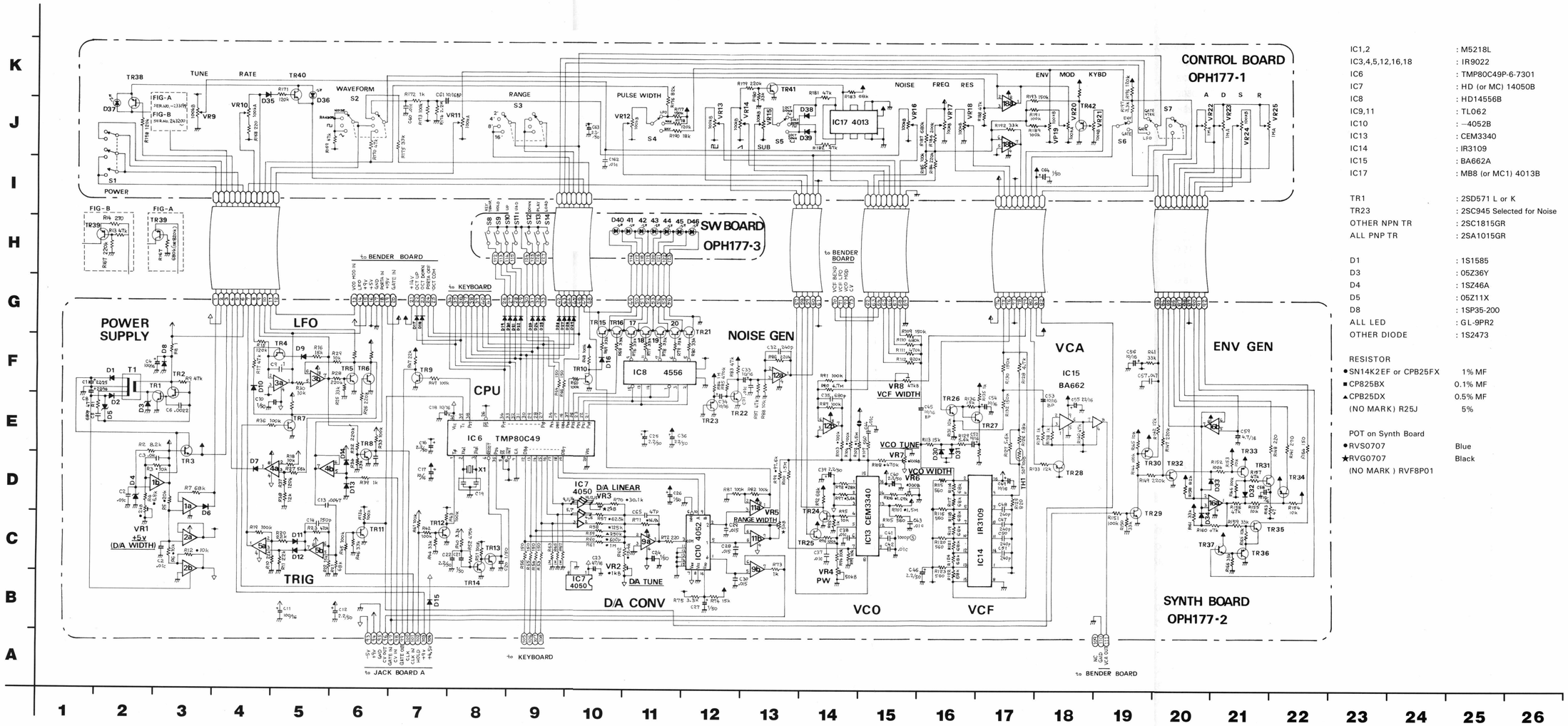

IC1,2	: M5218L
IC3,4,5,12,16,18	: IR9022
IC6	: TMP80C49P-6-7301
IC7	: HD (or MC) 14050B
IC8	: HD14556B
IC9,11	: TL062
IC10	: —4052B
IC13	: CEM3340
IC14	: IR3109
IC15	: BA662A
IC17	: MB8 (or MC1) 4013B
TR1	: 2SD571 L or K
TR23	: 2SC945 Selected for Noise
OTHER NPN TR	: 2SC1815GR
ALL PNP TR	: 2SA1015GR
D1	: 1S1585
D3	: 05Z36Y
D4	: 1SZ46A
D5	: 05Z11X
D8	: 1SP35-200
ALL LED	: GL-9PR2
OTHER DIODE	: 1S2473

RESISTOR

●SN14K2EF or CPB25FX	1% MF
■CP825BX	0.1% MF
▲CPB25DX	0.5% MF
(NO MARK) R25J	5%

POT on Synth Board

●RVS0707	Blue
★RVG0707	Black
(NO MARK) RVF8P01	

PARTS LIST

KEYBOARD

004H014	SK-331-AR	

CASE

072H133	Panel (cabinet)	
065H115	Battery cover	
065H116	Bottom panel	

BENDER UNIT

029H001	PB-5	

PCB

149H177-1	Control board	OPH177-1	(pcb 052H398C-1)
149H177-2	Synth. board	OPH177-2	(pcb 052H398C-2)
149H177-3	LED board	OPH177-3	(pcb 052H398C-3)
149H178-1	Bender board	OPH178-1	(pcb 052H399B-1)
149H178-2	Jack board A	OPH178-2	(pcb 052H399B-2)
149H178-3	Jack board B	OPH178-3	(pcb 052H399B-3)

SWITCH

13119303	SRM1034-K15	rotary
13169608	KHD10901	function
13129120	SUT113	push
13159121	SSB022F3	slide
13159319	SSB02358	slide
13139135	SLE-623-18P	lever

KNOB

016H071	Rotary pot or switch	
016H057	Slide switch	(yellow)
016H059	Slide pot	(green)
016H060	Slide pot	(orange)

BUTTON

2247019200	Function-switch	
12479225	TK-305	power switch

JACK

13449125	HLJ0520-01-110	Mono, ϕ6.5
13449126	HLJ0520-01-010	Stereo, ϕ6.5
13449409	HSJ0785-01-030	ϕ3.5
13449611	HSJ0789-01-020	ϕ2.5
13449706	HEC0470-01-230	AC Adaptor

IC

15179136	TMP80C49P-6-7301	CPU
15229810	CEM3340	VCO
15159105F0	MB84013B	Dual D-type Flip-Flop
15159128	HD14050B	Hex Buffer
15159114	TC4052BP	Dual 4-ch Multiplexer
15159308	HD14556B	Dual BCD to 4 Decoder
15189146	IR9022	Low power OP Amp
15229801	IR3109	VCF
15189119	TL062	Low power Bi-FET OP Amp
152298020A	BA662A	(offset selected) white dot
15189136B0	M5218L	OP Amp

TRANSISTOR

15199113	2SA1015-GR	
151291080A	2SC945 (NZ)	Noise generator
15129114	2SC1815-GR	
15129130	2SC1583	Pair-TR (common E)
15129600	2SD571-L or K	
15139103	2SK30A-GR	

DIODE

15019123	1S1585	
15019103	1S2473	
15019208	1SR35-200	
15019630	1SZ46A	
15019636	05Z-11X	
15019637	05Z-36Y	
15029128	GL-9PR2	LED

POTENTIOMETER

Slider (30mm)

13339420	S3018P405-100KA	
13339421	S3018P405-100KB	
13339422	S3018P405-1MA	

Slider (20mm)

13339328	S2018P405-100KA	
13339329	S2018P405-100KB	

Rotary

13219274	EVH-5XAP20A15	100KA
13219242	EVH-5XAP20B15	100KB
13219275	EVH-5XAP20A26	2MA

Trimmer

13299558	RVS0707V101-3-301	thermet (blue)	300
13299553	RVS0707V101-3-102		1K
13299559	RVS0707V101-3-202		2K
13299557	RVS0707V101-3-104		100K
13299560	RVG0707V101-10-202	thermet (black)	2K
13299561	RVG0707V101-10-502		5K
13299136	RV F8P01-503	carbon	50K
13299141	RV F8P01-204		200K

RESISTOR (metal film)

13799701	CRB25BX	62.5K	0.1%	100ppm
13799702	CRB25BX	125K	0.1%	100ppm
13799703	CRB25DX	250K	0.5%	100ppm
13769247D0	CRB25FX	500K	1%	100ppm
13769154K0	SN14K2EF	1.69K	1%	100ppm
13769167K0	SN14K2EF	5.6K	1%	100ppm
13769169K0	SN14K2EF	6.8K	1%	100ppm
13769173K0	SN14K2EF	10K	1%	100ppm
13769258K0	SN14K2EF	15.4K	1%	100ppm
13769259K0	SN14K2EF	16.9K	1%	100ppm
13769180K0	SN14K2EF	20K	1%	100ppm
13769256K0	SN14K2EF	28K	1%	100ppm
13769260K0	SN14K2EF	30.1K	1%	100ppm
13769261K0	SN14K2EF	97.6K	1%	100ppm
13769197K0	SN14K2EF	100K	1%	100ppm
13769213K0	SN14K2EF	470K	1%	100ppm
13769221K0	SN14K2EF	1M	1%	100ppm
13769257K0	SN14K2EF	1.5M	1%	100ppm

OTHERS

12389800	Ceramic resonator CSA 6MHz with CSC 300	
15229908	SDT-1000 thermister	
12449224	S1671140 coil	DC/DC converter
2345012500	Terminal board	battery + side
2345012600	Terminal board	battery − side
065H119	Dust cover	under panel
114H008	Film	battery case

●MGS-1 PARTS LIST

CASE

065H117	Cover	
065H118	Cover	
064H157	Holder	
064H158	Holder	

KNOB

016H083		

PCB

052H401		

POTENTIOMETER

13219273	PB-5RO	100KB

SWITCH

13129325	EVQ-PTR18K	

OTHERS

070H040	Coil Spring	
053H157	Plug Cord	
2228532500	Strap Pin	
133H005	Strap	
123H001	Screw	
107H041	Rubber Cushion	

●SK-331-AR (004H014) PARTS LIST
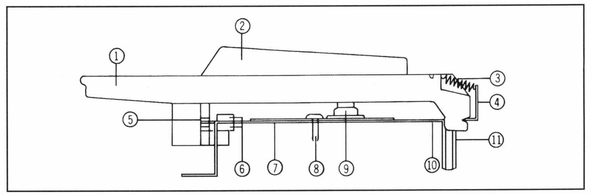
1	106H026	Natural Key	C.F
1	027	"	D
1	028	"	E.B
1	029	"	G
1	030	"	A
1	031	"	C'.F'
2	032	Sharp Key	
3	070H029	Key Spring	H29
4	061H142	Chassis	H142
5	068H004	Guide Bush	
6	101H139	Level Felt	H139
7	149H193	OPH193 (pcb 052H381)	
8		3x10 Self Tapping Binding Head	
9	102H007	Contact Rubber	
9	102H009	"	
10	098H006	Key Stopper	H6
11		Nuts	No. 13