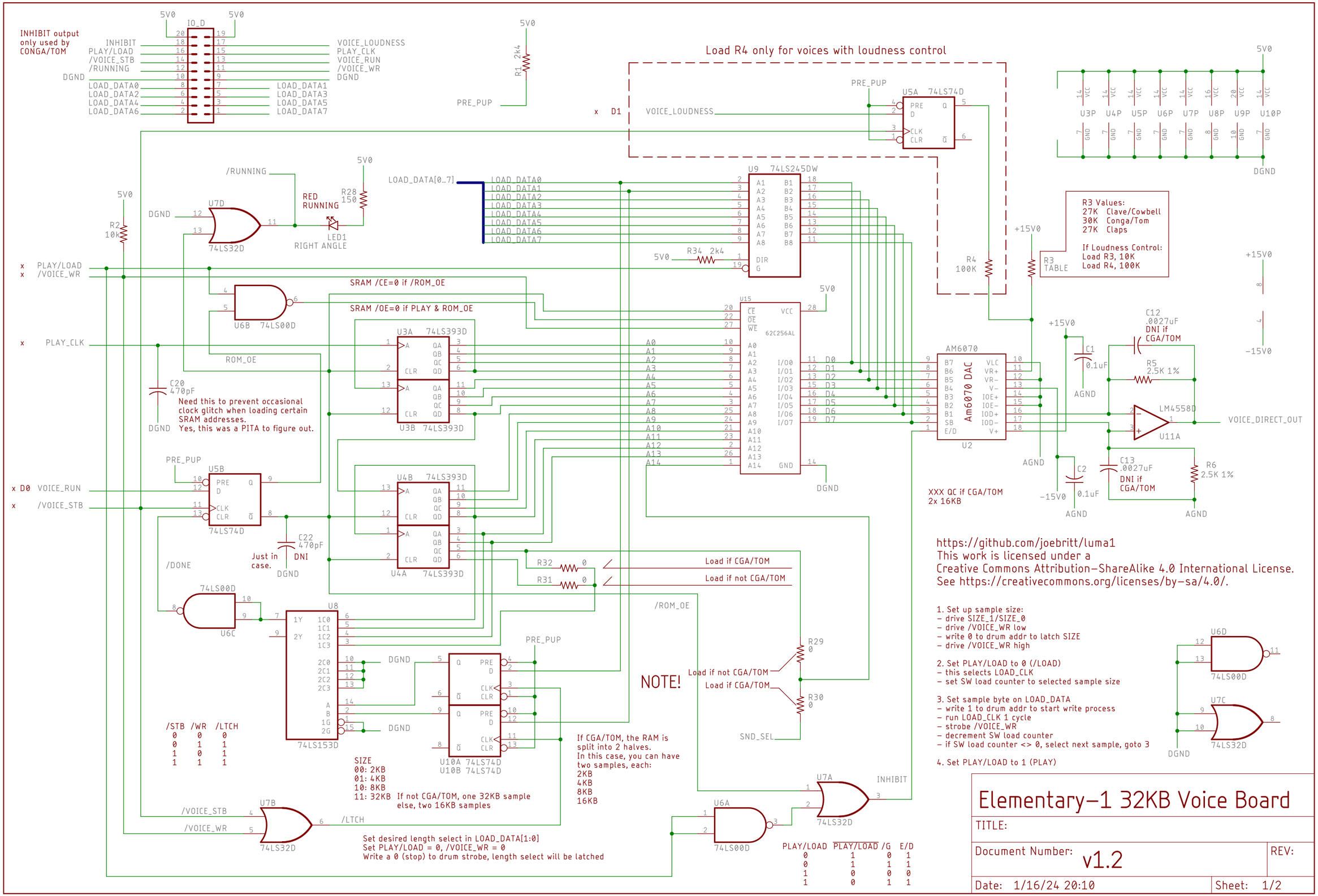
INHIBIT output only used by CONGA/TOM
IO_D
INHIBIT
PLAY/LOAD
/VOICE_STB
/RUNNING
DGND
LOAD_DATA0
LOAD_DATA2
LOAD_DATA4
LOAD_DATA6
VOICE_LOUDNESS
PLAY_CLK
VOICE_RUN
/VOICE_WR
DGND
LOAD_DATA1
LOAD_DATA3
LOAD_DATA5
LOAD_DATA7
5V0
R1 2k4
PRE_PUP
Load R4 only for voices with loudness control
D1
VOICE_LOUDNESS
PRE_PUP
U5A 74LS74D
U3P U4P U5P U6P U7P U8P U9P U10P
DGND
/RUNNING
RED RUNNING
R28 150
LED1 RIGHT ANGLE
U7D
74LS32D
R2 10k
LOAD_DATA[0..7]
U9 74LS245DW
R34 2k4
R4 100K
+15V0
R3 TABLE
R3 Values:
27K Clave/Cowbell
30K Conga/Tom
27K Claps
If Loudness Control:
Load R3, 10K
Load R4, 100K
PLAY/LOAD
/VOICE_WR
U6B 74LS00D
SRAM /CE=0 if /ROM_OE
SRAM /OE=0 if PLAY & ROM_OE
U15
62C256AL
PLAY_CLK
U3A 74LS393D
U3B 74LS393D
ROM_OE
C20 470pF
Need this to prevent occasional clock glitch when loading certain SRAM addresses.
Yes, this was a PITA to figure out.
AM6070
Am6070 DAC
U2
C1 0.1uF
AGND
C12 .0027uF
DNI if CGA/TOM
R5 2.5K 1%
LM4558D
U11A
VOICE_DIRECT_OUT
C13 .0027uF
DNI if CGA/TOM
R6 2.5K 1%
C2 0.1uF
-15V0
XXX QC if CGA/TOM
2x 16KB
PRE_PUP
U5B
74LS74D
VOICE_RUN
/VOICE_STB
U4B 74LS393D
U4A 74LS393D
C22 470pF
Just in case.
DNI
/DONE
74LS00D
U6C
U8
74LS153D
R32 0
R31 0
Load if CGA/TOM
Load if not CGA/TOM
/ROM_OE
R29 0
R30 0
Load if not CGA/TOM
Load if CGA/TOM
SND_SEL
NOTE!
U10A 74LS74D
U10B 74LS74D
/STB /WR /LTCH
0 0 0
0 1 1
1 0 1
1 1 1
SIZE
00: 2KB
01: 4KB
10: 8KB
11: 32KB
If not CGA/TOM, one 32KB sample else, two 16KB samples
If CGA/TOM, the RAM is split into 2 halves.
In this case, you can have two samples, each:
2KB
4KB
8KB
16KB
/VOICE_STB
/VOICE_WR
U7B
74LS32D
/LTCH
Set desired length select in LOAD_DATA[1:0]
Set PLAY/LOAD = 0, /VOICE_WR = 0
Write a 0 (stop) to drum strobe, length select will be latched
U6A
74LS00D
U7A
INHIBIT
PLAY/LOAD PLAY/LOAD /G E/D
0 1 0 1
0 1 1 1
1 0 0 0
1 0 1 1
https://github.com/joebritt/luma1
This work is licensed under a
Creative Commons Attribution-ShareAlike 4.0 International License.
See https://creativecommons.org/licenses/by-sa/4.0/.
1. Set up sample size:
- drive SIZE_1/SIZE_0
- drive /VOICE_WR low
- write 0 to drum addr to latch SIZE
- drive /VOICE_WR high
2. Set PLAY/LOAD to 0 (/LOAD)
- this selects LOAD_CLK
- set SW load counter to selected sample size
3. Set sample byte on LOAD_DATA
- write 1 to drum addr to start write process
- run LOAD_CLK 1 cycle
- strobe /VOICE_WR
- decrement SW load counter
- if SW load counter <> 0, select next sample, goto 3
4. Set PLAY/LOAD to 1 (PLAY)
U6D
74LS00D
U7C
74LS32D
Elementary-1 32KB Voice Board
TITLE:
Document Number: v1.2
REV:
Date: 1/16/24 20:10
Sheet: 1/2

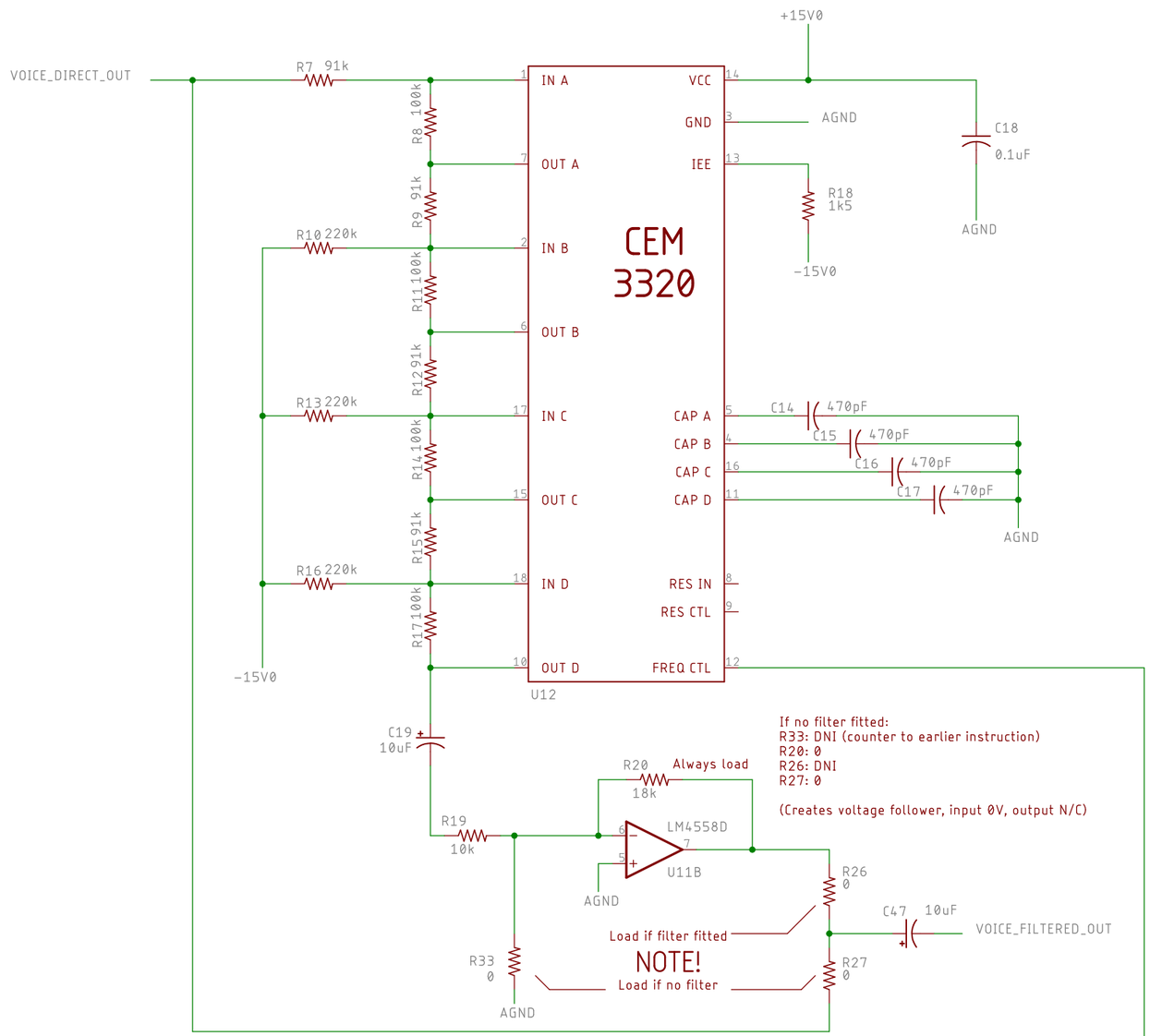

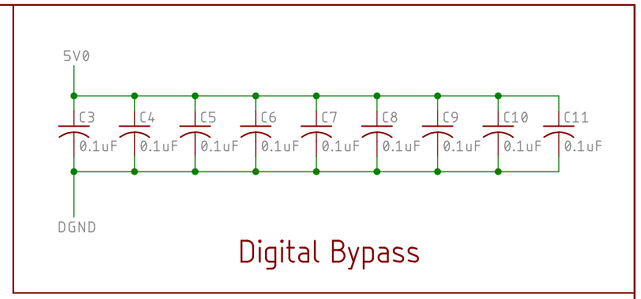

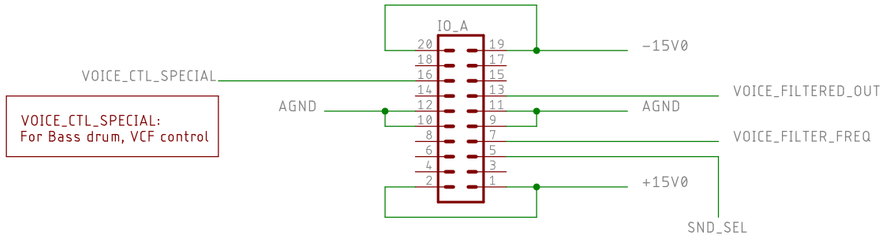

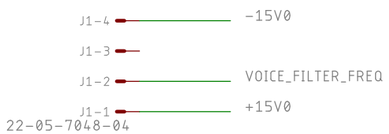

https://github.com/joebritt/luma1
This work is licensed under a
Creative Commons Attribution-ShareAlike 4.0 International License.
See https://creativecommons.org/licenses/by-sa/4.0/.

Elementary-1 32KB Voice Board

TITLE:

Document Number: v1.2

REV:

Date: 1/16/24 20:10

Sheet: 2/2