SALES ORDER:	DATE:	FITTING DATE:

FORTRESS SECC600–VERT LIFT LOW SPRING

CUSTOMER:		
JOB TITLE:		
SITE ADDRESS:		
DOOR REF	INTERNAL	EXTERNAL
MEASURED BY	DRAWN BY	SITE CONTACT

SPECIFICATION

FIXING TO		
KEYSWITCH DEADMAN	INSIDE	
	OUTSIDE	
PUSH BTN DEADMAN	INSIDE	
	OUTSIDE	
IMPULSE	RADAR	
	IND LOOP	
	FOBS	
	*SPECIAL	
FIRE LINK	FUSIBLE	
	PANEL	
	*SPECIAL	
FITTING ANGLES DETAIL OPPOSITE		
SAFETY EDGE		
PHOTOCELLS		
COIL CASING		
FASCIA		
MOTOR HOOD		
FIRE RATING		
COLOUR/FINISH		
FLASHINGS	INSIDE	
	OUTSIDE	

OTHER ITEMS:

FORTRESS SEFA
SECURITY ENVIRONMENTAL FIRE ARCHITECTURAL

6 TRENCH ROAD,
MALLUSK,
NEWTOWNABBEY,
CO.ANTRIM,
N.IRELAND,
BT36 4TY
TEL:+44 (0)2890 342655

EMAIL:
INFO@FORTRESS-SEFA.COM

WWW.FORTRESS-SEFA.COM

17C_SECC600_NBS_V6 2016_REV1 _ 10.8.18

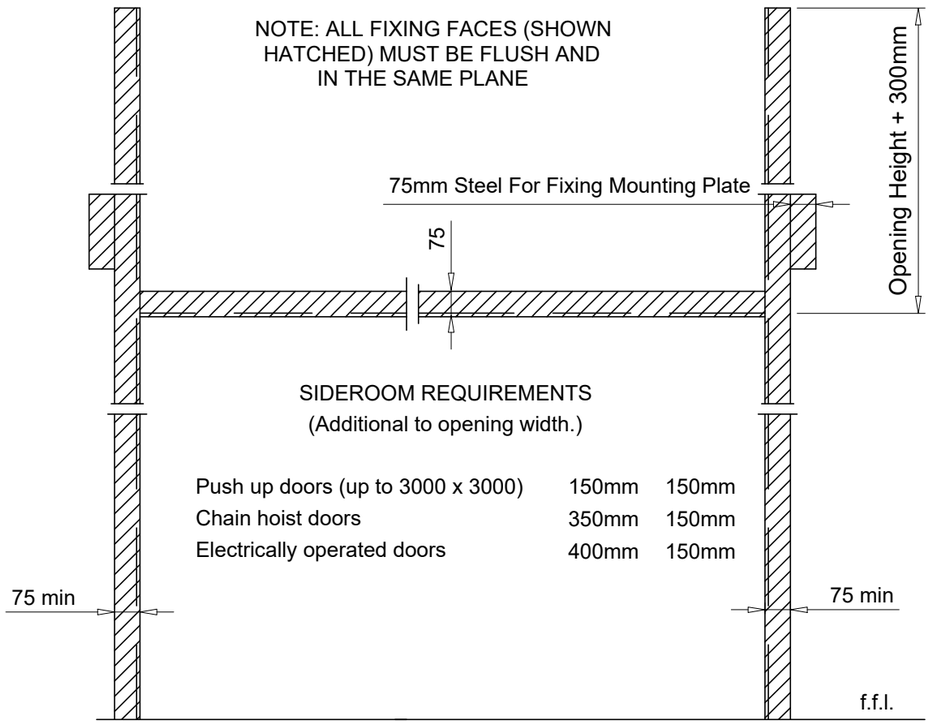

Elevation from inside building

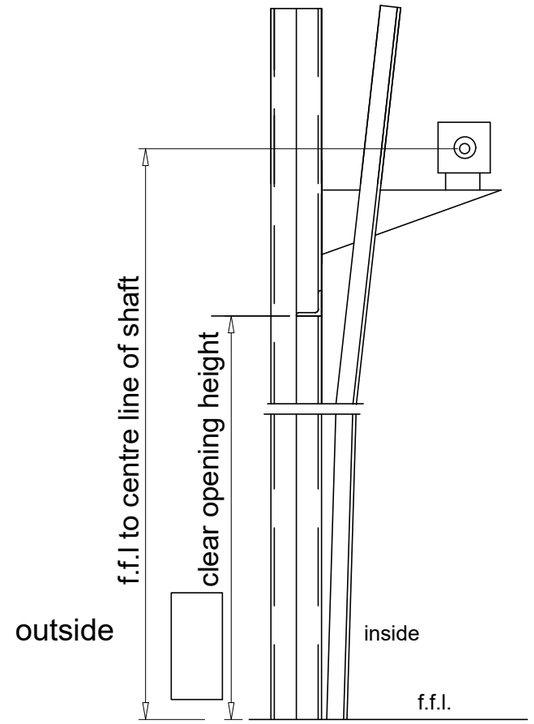

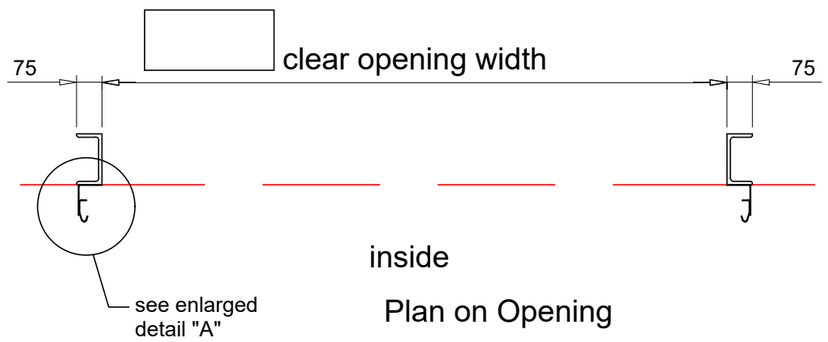

Plan on Opening

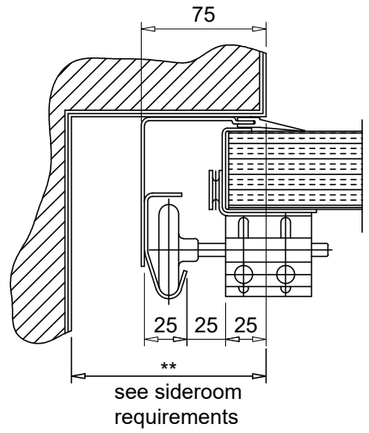

DETAIL "A"

SKETCHES, NOTES & DETAILS – STEELWORK/ANGLES ETC