DRAFT MODULE

DRAFT PHYSICS II MODULE

By

Thomas Nyanda Reuben, PhD

and

Duncan Nkolokosa Elia, MSc

Note: This module is under development and must be used for LUANAR ODL purposes only unless permission is sought from the LUANAR ODL Coordinator

Module Objectives

By the end of the module, you should be able to:

1) Acquire knowledge on fluids, heat transfer, simple machines, simple harmonic motion, work, power and energy, electricity, light and optics
2) Relate concepts of fluid statics and dynamics to design and evaluation of hydraulic structures
3) Relate concepts of heat transfer, simple machines, simple harmonic motion, work, power and energy, electricity, light and optics to design, operation and evaluation of agricultural and natural resource equipment and instruments

DRAFT MODULE

UNIT 1: Fluid Mechanics

1.0 Introduction

Welcome to Unit 1!!! In this unit we will discuss the properties of fluids and their application to design of hydraulic structures. You will agree that our day to day lives depend on and deal with fluids. Before we proceed, let us remind each other what fluids are. McDonough (2009) defined a fluid as a substance that will undergo continuous deformation when it is subjected to shear stress regardless of how small the shear stress is. We can, alternatively simply define a fluid as any substance that has the capability to flow and occupy the shape of a container in which it is placed. There are two groups of fluids, namely, gases and liquids. The air (gas) that we breathe and the water (liquid) that we use day after day are examples of fluids. Our discussion in this unit will cover the nature of fluids at rest (statics) and in motion (dynamics).

1.1. Objectives

By the end of this unit you should be able to:

- Define fluid concepts
- Differentiate one fluid concept from another
- Solve and analyze real-life problems related to fluids
- Relate fluid concepts to design of hydraulic structures and equipment

Key terms

Ensure that you understand the key terms or phrases used in this unit as listed below.

- Absolute viscosity
- Buoyancy
- Capillarity
- Critical velocity
- Density
- Energy head
- Fluid dynamics
- Fluid mechanics
- Fluid statics
- Fluid viscosity

DRAFT MODULE

- Head loss
- Ideal fluids
- Kinematic viscosity
- Kinetic energy
- Laminar flow
- Newtonian fluids
- Potential energy
- Pressure
- Reynolds number
- Specific gravity
- Specific weight
- Steady flow
- Surface tension
- Turbulent flow
- Uniform flow
- Velocity head

1.2 Fluid Mechanics

We will start our discussion by talking about fluid mechanics. Fluid mechanics represents a branch of applied mechanics that deals with the behaviour of fluids at rest (statics) and in motion (dynamics). In general fluids cover the liquid and gaseous state of matter. Fluids are substances that are capable of flowing and conform to the shape of vessels containing them. Let us look at other properties of fluids are presented below.

1) Fluids cannot sustain tangential or shear forces when in equilibrium.
2) All fluids have some degree of compressibility and offer little resistance to change of form.

We can classify fluids as liquids or gases. The chief differences between liquids and gases are:

1) Liquids are practically incompressible
2) Gases are compressible and usually must be so treated
3) Liquids occupy definite volumes and have free surfaces whereas a given mass of gas expands until it occupies all portions of any containing vessel.

1.3 Properties of Fluids

We will now discuss different fluid properties in order to further our understanding of fluids. The properties include specific weight, density, specific gravity and viscosity.

DRAFT MODULE

1.3.1 Specific weight (γ)

The specific weight (γ or w) of a substance is the weight of a unit volume of the substance. For liquids, γ may be taken as constant for practical changes of pressure. The specific weight of water for ordinary temperature variations is 9.79 kN/m^3.

We can calculate the specific weight of a **gas** using the equation of state which reads

$$\frac{PV}{T} = nR \qquad \textbf{1.1}$$

Where pressure p is absolute pressure, v is the volume per unit weight, temperature T is the **absolute temperature**, n the number of moles and R is the gas constant of a particular gas species:

$$R = \frac{R_0}{Mg} = \frac{universal\ gas\ constant}{molar\ \ weight} \qquad \textbf{1.2}$$

Since an inverse relationship exists between the gas' specific weight and volume, i.e. γ = 1/v, then,

$$\gamma = \frac{P}{nRT} \qquad \textbf{1.3}$$

1.3.2 Density of a Fluid or Body

DRAFT MODULE

We define the density of a given fluid or a body as its mass (m) per unit volume (v). We can similarly define it as the specific weight (γ) of the fluid or body divided by the acceleration due to gravity (g) since $\gamma/g = W/vg = mg/vg = m/g$. Thus,

$$\rho = \gamma/g \text{ or } \gamma = \rho g$$

In SI units, the density of water is 1000kg/m^3 at 4°C.

1.3.3 Specific gravity of a body

The specific gravity of a body is the dimensionless ratio of the weight of the body to the weight of an equal volume of a substance taken as a standard. Solids and liquids are referred to water (20°C) as their standard while gases are often referred to air free of carbon dioxide or hydrogen (0°C).

$$Specific\ gravity = \frac{weight\ of\ substance}{weight\ of\ equal\ volume\ of\ water} \qquad \textbf{1.2}$$

$$= \frac{specific weight\ of\ substance}{specific weight\ of\ water}$$

$$= \frac{density of\ substance}{density of\ water}$$

Thus if the specific gravity of a given oil is 0.750, its specific weight is (0.750)(9.79kN/m^3) = 7.34kN/m^3.

1.3.4 Viscosity of a fluid

DRAFT MODULE

Viscosity is due primarily to interaction between fluid molecules. The viscosity of a fluid is that property which determines the amount of its resistance to a shearing force. The shear force required to move the particle in relation to one another depends on the type of liquid and upon its temperature. The shear force of a given fluid is measured in terms of the ***Viscosity*** of the fluid. A gas has a very low viscosity while that of a liquid is higher. The viscosity of a liquid will increase as its temperature is reduced. Referring to the figure below, consider two large, parallel plates a small distance y apart, the space between the plates being filled with a fluid. To keep the upper late moving at a constant velocity U, it is found that a constant force F must be applied. Thus there exists a viscous interaction between the plate and fluid manifested by a drag on the former and a shear force on the latter.

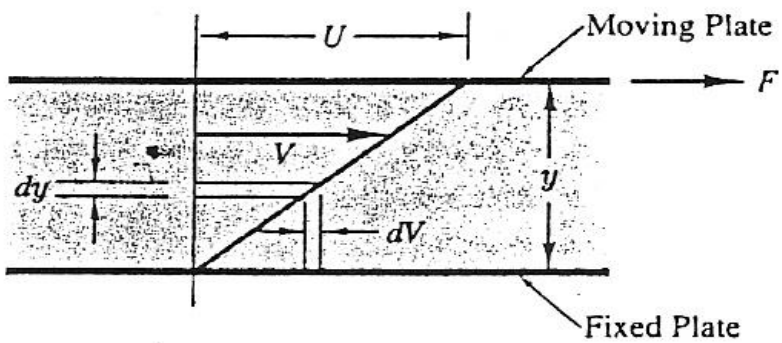

The fluid in contact with the upper plate will adhere to it and will move at velocity U, and the fluid in contact with the fixed plate will have velocity zero. If distance y and velocity U are not too great, the velocity profile will be a straight line. Experiments have shown that shear force F varies with the area of the plate A, with velocity U, and inversely with distance y. Since by similar triangles, U/y = dV/dy, we have:

$$F \propto (A.U/y = A.dV/dy) \quad \text{or} \quad (F/A = \tau) \propto dV/dy \qquad \textbf{1.3}$$

Where τ = F/A = shear stress.

If a proportionality constant, μ, called the ***absolute* (*dynamic*) *viscosity***, is introduced,

$$\tau = \frac{\mu dV}{dy} \text{ or } \mu = \frac{\tau}{dV/dy} = \frac{shear\,stress}{rate\ of\ shear\,strain} \qquad \textbf{1.4}$$

It follows that the units of μ are Pa-s. Fluids for which the proportionality of the above equation holds are called ***Newtonian fluids.***The above expression was postulated by Newton and is known as ***Newton's equation of viscosity.***An ***Ideal*** or ***perfect fluid*** is one which there are no tangential or shear stresses between the fluid particles. The forces always act normally at a section and are limited to pressure and accelerative forces. No ***real fluid*** fully complies with this concept, and for all fluids in motion there are tangential stresses present which have a dampening effect on the motion. However, some liquids, including water, are near to an ideal fluid, and this simplifying assumption enables mathematical or graphical methods to be adopted in the solution of certain flow problems.

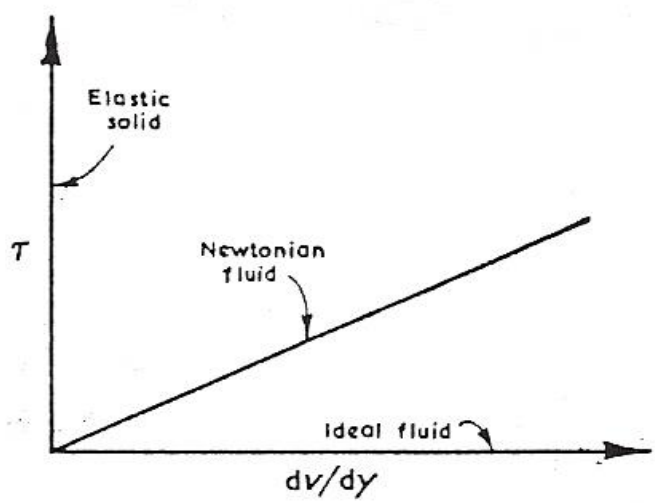

Figure 1. Relationship between shearing

Another viscosity coefficient, the ***coefficient of kinematic viscosity***, is defined as

$$kinematic\ viscosity,\ \nu = \frac{absolute\ viscosity}{mass\ density\ \rho}$$

$$\nu = \frac{\mu}{\rho} = \frac{\mu}{\rho / g} = \frac{\mu g}{\gamma} \qquad \textbf{1.5}$$

The units of ν are m^2/s.

1.4 Fluid statics

As we saw earlier on, fluid statics deals with the understanding and application of properties of fluids at rest. In this section we will fluid pressure, surface tension, capillarity, and buoyancy and floatation.

1.4.1 Pressure

We can define pressure as the perpendicular force per unit area. The pressure exerted on or by a fluid is thus a force exerted at right angles to a unit area of surface in contact with the fluid. Pressure exerted by a fluid varies directly with depth. Fluid pressure is transmitted with equal intensity in all directions and acts normal to any plane.

Having defined what pressure is, let us now look at **Pascal's Principle**. Pascal's principle states that "***when the pressure on any part of a confined fluid is changed, the pressure on every part of the fluid is also changed by the same amount***". For conditions where force F is uniformly distributed over an area, we have

DRAFT MODULE

$$p = \frac{F}{A} \tag{1.6}$$

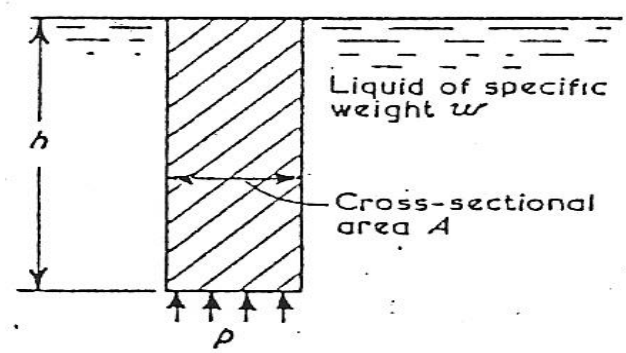

Figure 2. Pressure exerted by a column of fluid

The difference in pressure between any two points at different levels in a liquid is given by the following equation:

$$p_2 - p_1 = \gamma(h_2 - h_1) \tag{1.7}$$

where γ = Specific weight of the liquid and $h_2 - h_1$ = difference in elevation.

If point 1 is in the free surface of the liquid and h is positive downward, the above equation becomes

$$p = \gamma h \text{ (gauge pressure)} \tag{1.8}$$

We can apply these equations as long as long as γ is constant (or varies so slightly with h as to cause no significant error in the result). In the context of pressure, we use the term ***vacuum*** to refer to a space that has a pressure less than the atmospheric pressure.

DRAFT MODULE

Atmospheric pressure refers to the prevailing pressure in the air around us. It varies somewhat with changing weather conditions, and it decreases with increasing altitude.

The average atmospheric pressure that you would experience at sea level is 101.3kPa, or 760mm of mercury, or 1 atmosphere. We commonly call this the "standard atmospheric pressure". Now, you may have come across the term "vacuum". We can quantify a vacuum in terms of how much its pressure is below atmospheric pressure. For example, if we pump air out of a pressure vessel until the internal pressure is 68.9kPa, and if atmospheric pressure is standard (i.e. 101.3kPa), we could indicate the pressure in the vessel as a vacuum of 101.3kPa – 68.9 which is equal to 32.4kPa.

We generally indicate pressure measurements as either ***absolute pressure*** or ***gauge pressure***. Absolute pressure uses absolute zero, which is the lowest possible pressure and the pressure that would exist in a perfect vacuum, as its base (i.e. zero reading). Gauge pressure is measured with atmospheric pressure as its base.

Thus if a fluid pressure is 5.5kPa above standard atmospheric pressure (101.3kPa), its gauge pressure would be 5.5kPa and we can find its absolute pressure as 5.5 + 101.3, or 106.8kPa. Sometimes absolute and gauge pressures are indicated by appending "a" and "g", respectively, to the pressure units.

Note*: If no "a" or "g" (or other indication) is given, pressure is usually gauge pressure*.

DRAFT MODULE

1.4.1.1 Vapour Pressure

When evaporation takes place within an enclosed space, the partial pressure created by the vapour molecules is called vapour pressure. Vapour pressure depends upon temperature and increases with it.

1.4.1.2 Hydrostatic Pressure

We can define hydrostatic pressure as pressure due to a column of fluid height h and density ρ and represent this mathematically as:

$$P = \rho g h \tag{1.9}$$

1.4.2 Surface Tension and Capillarity

1.4.2.1 Surface Tension

We need to note that a molecule in the interior of a liquid is under attractive forces in all directions and the vector sum of these forces is zero. A molecule at the surface of a liquid is acted upon by a net inward cohesive force that is perpendicular to the surface.

1.4.2.2 Capillarity

You might have observed that a liquid can rise or fall in a capillary tube (thin tube or porous medium such as the soil). This rise or fall of the liquid is caused by surface tension and depends on the relative magnitudes of the cohesion of the liquid and the adhesion of the liquid to the walls of the containing vessel. Liquids rise in tubes they wet (adhesion > cohesion) and fall in tubes they do not wet (cohesion > adhesion). We can illustrate these phenomena using **Figure 3** (a) and (b).

DRAFT MODULE

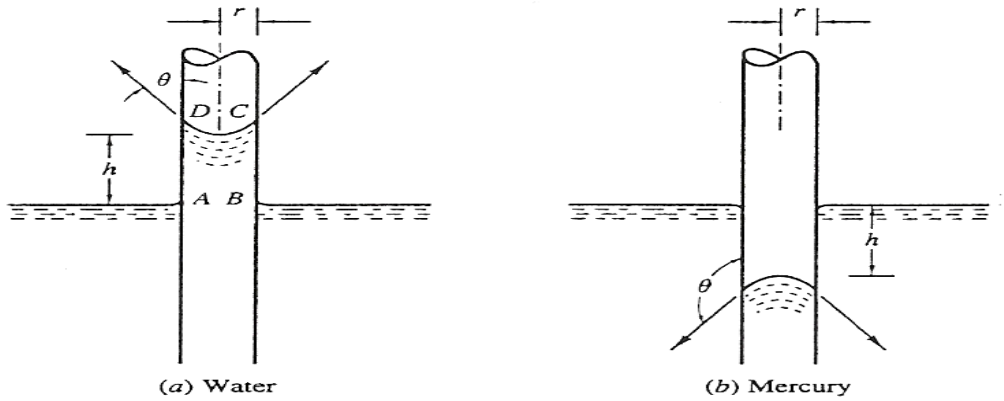

Figure 3. An illustration of capillarity

1.4.3 Buoyancy and Floatation

It is worthy for us to note that the basic principle of buoyancy and floatation was first discovered and stated by Archimedes over 2200 years ago. We can state **Archimedes principle** as follows:

A body floating or submerged in a fluid is buoyed (lifted) upward by a force equal to the weight of the fluid that would be in the volume displaced by the body

or

If a body floats, or is submerged, in a liquid, the liquid exerts an up thrust on the body equal to the gravitational force on the liquid displaced by the body.

The force that the liquid exerts on the body is known as the ***buoyant force.*** The point through which the buoyant force acts is called the ***centre of buoyancy*** and is located at the centre of gravity of the displaced fluid.

DRAFT MODULE

By applying Archimedes' principle, we can find volumes of irregular solids by determining the apparent loss of weight when a body is wholly immersed in a liquid of known specific gravity.

1.5 Fluid Flow

We have all encountered or seen fluids flowing through a given stream channel or pipeline. We can characterize fluid flow as

1) Steady or unsteady;
2) Uniform or non-uniform;
3) Laminar or turbulent;
4) One-dimensional, two-dimensional, or three-dimensional; and
5) Rotational or irrotational

When we have fluid flow in which the fluid particles do not experience any rotational motion about their centers of mass, the flow is termed **irrotational**. This kind of flow can be represented by a flow net. The fluid undergoing irrotational motion is referred to as an **ideal fluid.** We can define an ideal fluid as one in which no shear stresses occur and hence no torque exists.

1.5.1 Steady Flow

Steady flow occurs if, at any point, the velocity of successive fluid particles is the same at successive periods of time. Thus, velocity is constant with respect to time hence we can mathematically define this condition as $\partial V/\partial t = 0$. The velocity may vary at different points or with respect to distance. Based on this statement, we may as well say that other fluid variables will not vary with time, implying that $\partial p/\partial t = 0$, $\partial \rho/\partial t = 0$, $\partial Q/\partial t = 0$, etc.

DRAFT MODULE

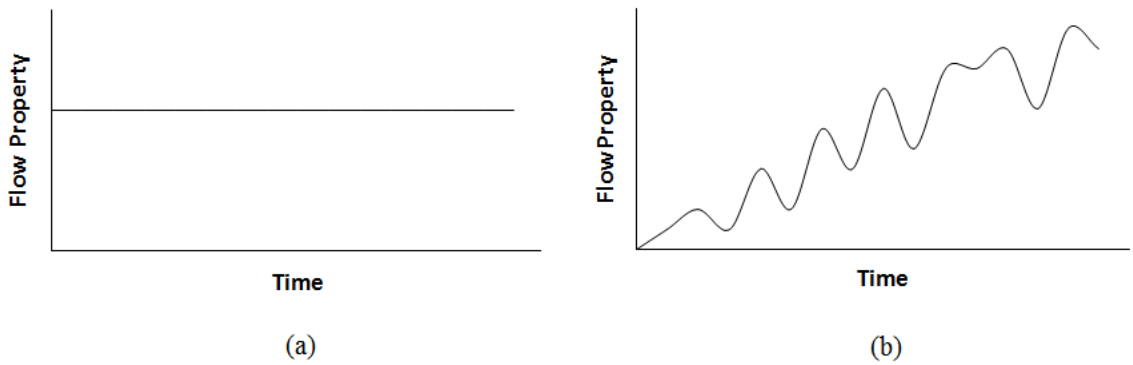

Figure 4. Steady flow (a) and unsteady flow (b)

Most practical engineering flow problems involve steady flow conditions. For example, pipelines carrying liquids under constant head conditions or orifices flowing under constant heads illustrate steady flow. These flows may be uniform or non-uniform.

1.5.2 Uniform Flow

Uniform flow occurs when the magnitude and direction of velocity do not change from point to point in the fluid. This statement can mathematically be represented by $\partial V/\partial s = 0$. The statement implies that other fluid variables do not change with distance, or, $\partial y/\partial s = 0$, $\partial \rho/\partial s = 0$, $\partial p/\partial s = 0$, etc. You should note that flow of liquids under pressure through long pipelines of constant diameter is uniform flow whether the flow is steady or unsteady. **Figure 5** is an illustration of uniform flow.

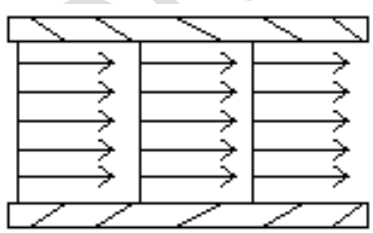

Figure 5. Uniform flow. Modified from McDonough (2009).

DRAFT MODULE

On the other hand, non-uniform flow occurs when the velocity, depth, pressure, etc., change from point to point as the fluid flows. In this case, $\partial V/\partial s \neq 0$ and this is true for the other fluid variables too. **Figure 5** illustrates non-uniform flow.

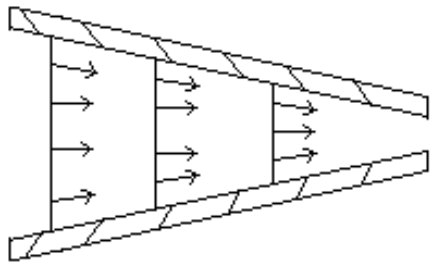

Figure 6. Non-uniform flow. Modified from McDonough (2009).

1.5.3 Stream lines

Stream lines are imaginary curves drawn through a fluid to indicate the direction of motion in various sections of the fluid flow system (**Figure 7**). McDonough (2009) stated that the tangent at each point on a streamline is the direction of the velocity vector at that point.

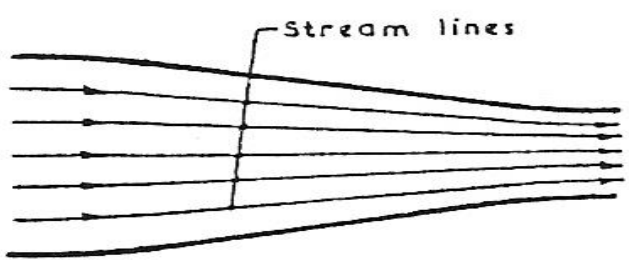

Figure 7. Stream lines for a converging pipe section

1.5.4 Stream tubes

A stream tube represents elementary portions of a flowing fluid bounded by a group of streamlines that confine the flow (see Figure 8). If the stream tube's cross-sectional area is

DRAFT MODULE

sufficiently small, we can take the velocity along the midpoint of any cross section as the average velocity for the section as a whole.

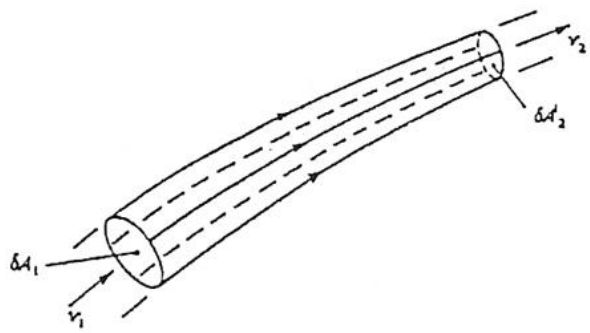

Figure 8. Elemental stream tube

1.5.5 Continuity Equation

The equation of continuity results from the principle of conservation of mass. We can conveniently define mass in terms of the quantity of liquid which passes a given section in unit time. This is referred to as mass flow.

For steady flow, the mass of fluid passing all sections in a stream of fluid per unit time is the same. This can be evaluated as the mass flow rate.

$$\rho_1 A_1 V_1 = \rho_2 A_2 V_2 = \text{constant} \qquad \textbf{1.10}$$

or

$$\gamma_1 A_1 V_1 = \gamma_2 A_2 V_2 \qquad \textbf{1.11}$$

For ***incompressible*** fluids and where $\gamma_1 = \gamma_2$ or $\rho_1 = \rho_2$ for all practical purposes, the equation becomes

DRAFT MODULE

$$Q = A_1V_1 = A_2V_2 = \text{constant (Volumetric flow rate)} \quad \textbf{1.12}$$

Where A_1 and V_1 are respectively the cross-sectional area and average velocity of the stream at section 1, with similar terms for section 2. Units of flow are cubic metres per second (m^3/s). This is known as the ***continuity equation***.

1.5.6 Energy head

Moving fluids possess energy. We need to consider three forms of energy when analysing fluid flow problems. The forms of energy are

1) Potential;
2) Kinetic; and
3) Pressure energy

We can illustrate these energy forms using **Figure 9**.

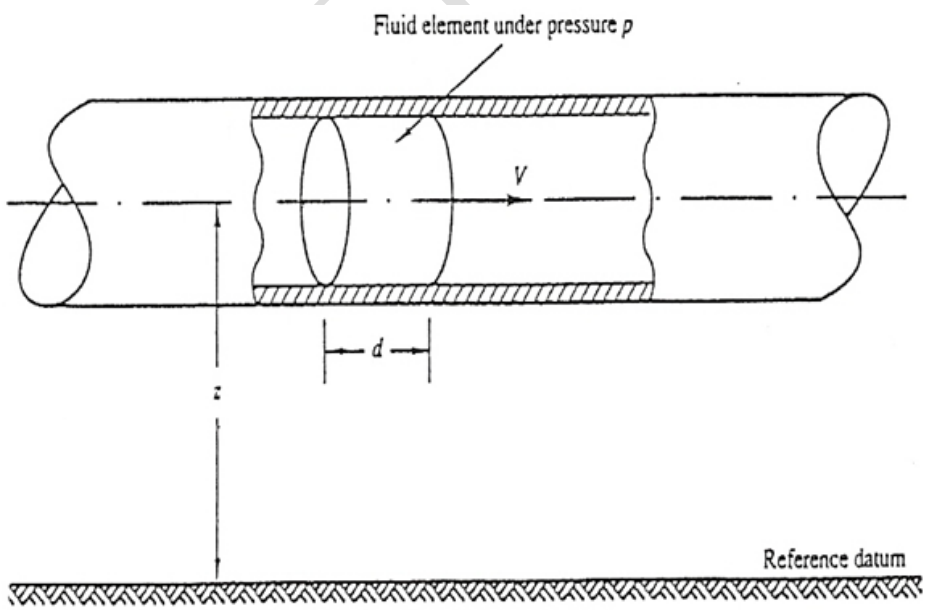

Figure 9. Fluid element within a conduit

Consider the fluid element within the conduit shown in the diagram above. The element is located a distance z above a reference datum and has a velocity v and pressure p.

1.5.6.1 Potential energy

Potential energy (PE) refers to the energy possessed by a fluid element due to its elevation above a reference datum. We can determine it quantitatively by multiplying the weight (W) of the element by the distance at which the element is located above the reference datum (z). Therefore,

$$PE = mgz \qquad \textbf{1.13}$$

In a continuous flow process, however, it is convenient for us to think in terms of unit mass at a particular point in the liquid stream. The energy per unit mass is called the ***specific potential energy*** of the liquid. Thus, specific potential energy is

$$PE = gz \qquad \textbf{1.14}$$

1.5.6.2 Kinetic energy

Kinetic energy refers to the energy possessed by an element of fluid due to its velocity. Kinetic energy (KE) is determined quantitatively by

$$KE = (\tfrac{1}{2})mV^2 \qquad \textbf{1.15}$$

Similarly since this is a continuous flow process, the energy per unit mass is called the ***specific kinetic energy*** of the liquid.

DRAFT MODULE

Thus per unit mass

$$KE = \frac{1}{2}V^2 \qquad \textbf{1.16}$$

1.5.6.3 Pressure energy

Pressure energy, sometimes called ***flow energy***, is the amount of work required to force the element of fluid across a certain distance against pressure

The pressure energy (FE) can be evaluated by determining the work done in moving the fluid element a distance equal to the segment's length (d).
The force causing work is the product of pressure (p) and cross-sectional area (A) of the element. Hence

$$FE = pAd \qquad \textbf{1.17}$$

The term Ad, is in fact, the volume of the element. Hence

FE = pv
but v = m/ρ

Therefore,

$$FE = pm/\rho \qquad \textbf{1.18}$$

Similarly, if we consider a unit mass, FE = p/ρ. This is called the ***specific pressure head*** of the liquid in the pipe line.

1.5.7 Energy equation

DRAFT MODULE

We can derive the energy equation by applying the principle of conservation of energy to fluid flow. Let us consider two points 1 and 2 as shown in **Figure 10.**

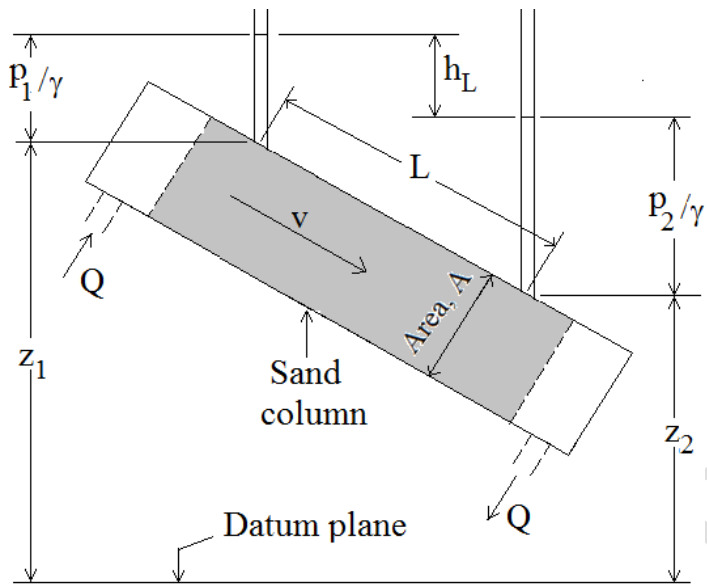

Figure 10. Illustration of the Energy Equation components

You will recall that the energy possessed by a flowing fluid consists of internal energy and energies due to pressure (p), velocity (v), and position (z). In the direction of flow, the energy principle is summarised by the general equation:

Energy at section 1 + energy added – energy lost – energy extracted = energy at section 2

1. 19 $$\left(\frac{P_1}{\gamma}+\frac{V_1^2}{2g}+Z_1\right)+H_A-H_L-H_E=\left(\frac{P_2}{\gamma}+\frac{V_2^2}{2g}+Z_2\right)$$

DRAFT MODULE

This equation is known as the ***Bernoulli theorem***. The Bernoulli's equation can be expressed in terms of equivalent heads. Thus, if we divide the above equation by g we have:-

1.20
$$\frac{P_1}{\rho g} + \frac{V_1^2}{2g} + z_1 = \frac{P_2}{\rho g} + \frac{V_2^2}{2g} + z_2$$

Each term of the Bernoulli equation is measured in metres of liquid. Many problems dealing with flow of liquids use this equation as the basis of solution. Flow of gases, in many instances, involves principles of thermodynamics and heat transfer. Many problems dealing with flow of liquids use this equation as the basis of solution.

1.5.8 Velocity head

Velocity head represents the kinetic energy per unit weight of a fluid at a particular point. If the velocity at a cross-section were uniform, then the velocity head that we would calculate with this uniform or average velocity would be the true kinetic energy per unit weight of fluid.

1.5.9 Power

Power is calculated by multiplying the number of Newtons of fluid flowing per second (γQ) by energy H in Nm/N.

$$\text{Power, } P = \gamma QH = N/m^3 \times m^3/s \times Nm/N = Nm/s \text{ or watts (W)} \quad \textbf{1.21}$$

1.5.10 Flow in Closed Conduits

DRAFT MODULE

The energy principle is applied in the solution of practical closed-conduit flow problems in different branches of engineering practice. Flow of a real fluid is more complex than that of an ideal fluid. Results of experimentation and semi-empirical methods must be used to solve flow problems.

Two types of steady flow of real fluids exist, which must be understood and considered. They are ***laminar flow*** and ***turbulent flow***. Different laws govern the two types of flow.

1.5.10.1 Laminar Flow

In laminar flow, fluid particles move along straight, parallel paths in layers or laminae. Magnitudes of velocities of adjacent laminae are not the same.

1.5.10.2 Turbulent Flow

In turbulent flow, fluid particles move in haphazard fashion in all directions. It is virtually impossible to trace the motion of an individual particle.

1.5.10.3 Critical Velocity

Critical velocity is of practical interest to engineers. It is the velocity below which all turbulence is damped out by the viscosity of the fluid. It is found that the upper limit of laminar flow of practical interest is represented by a Reynolds number of about 2000.

1.5.10.4 Reynolds Number

The Reynolds number (Re) is a dimensionless number which represents the ratio of inertia forces to viscous forces. For circular pipes that are flowing full, we can find the Reynolds number using the following equation:

DRAFT MODULE

1.22

$$Reynolds\ number, Re = \frac{Vd\rho}{\mu} = \frac{Vd}{\nu} = \frac{V(2r_o)}{\nu}$$

where V = mean velocity in m/s

d = diameter of pipe in m

ν = kinematic viscosity in m^2/s

ρ = mass density of fluid in kg/m^3

μ = absolute viscosity in Ns/m^2

For non-circular cross sections, we use the ratio of cross-sectional area to wetted perimeter, called the ***hydraulic radius,*** R (in metres), to calculate the Reynolds number. The following equation is used for non-circular cross sections:

1.23

$$Re = \frac{V(4R)}{\nu}$$

1.5.11 Loss of head for laminar flow

Loss of head for laminar flow is expressed by the ***Hagen-Poiseulle*** equation.
The expression is

$$Lost\ head = \frac{32(viscosity\ \mu)(length\ L)(average\ velocity\ V)}{(specific\ weight\ \gamma)(diameter\ d)^2}$$

1.24

$$= \frac{32\ \mu LV}{\gamma d^2}$$

The other equation used to determine head loss is known as the Darcy-Weisbach formula and it reads:

DRAFT MODULE

$$\text{Friction head loss } h_f = \text{Friction factor } f \times \frac{\text{Pipe length } L}{\text{Pipe diameter } d} \times \text{Velocity head } \frac{V^2}{2g}$$

1.25

$$= f\left(\frac{L}{d}\right)\left(\frac{V^2}{2g}\right)$$

For **laminar flow** in all pipes for all fluids, the value of *f* is:

1.26

$$f = \frac{64}{Re}$$

Re has a practical maximum value of 2000 for laminar flow. For ***turbulent flow***, many hydraulic engineers have endeavoured to evaluate *f* from the results of their own experiments and from those of others.

1.5.11.1 Minor head losses

Other head losses are generally categorised as "minor" head losses. They result when there is a significant change in flow pattern. Hence, they occur in conduit contractions and enlargements (both sudden and gradual)), valves, fittings, bends, etc., and entrance to or exit from a conduit. In some cases, a "minor" loss can be quite important.

1.5.11.2 Entrance losses

Entrance losses occur when a liquid enters a conduit from a large tank or reservoir.
The amount of head loss is significantly dependent on the shape of the entrance.
If an entrance is well rounded, the entrance loss will be very small.

1.5.11.3 Exit losses

DRAFT MODULE

Exit losses occur when a liquid exits a conduit and enters a large tank or reservoir. The losses can be due to sudden contractions, sudden expansions, gradual expansions or gradual contractions. ***Sudden contraction losses*** occur when there is an abrupt decrease in conduit size and ***sudden expansion losses*** happen when there is an abrupt increase in conduit size. Similarly, ***gradual expansion losses*** occur when there is a gradual increase in conduit size, and ***gradual contraction losses*** happen when there is a gradual decrease in conduit size.

Theoretical considerations of the various minor losses are quite complicated; therefore, minor losses are usually evaluated by empirical methods.
They are commonly expressed in terms of the applicable velocity head. In equation form,

$$Lost\ head\ (m) = K\left(\frac{V^2}{2g}\right) \qquad \textbf{1.27}$$

Activity: Example

Water is conveyed through a trapezoidal irrigation canal at a volumetric flow rate of $15m^3$/sec. The canal has a bottom width of 3 m and the water is flowing at an effective depth of 2 m. If the top width of the flowing water is 9 m. What is the velocity head of the water?

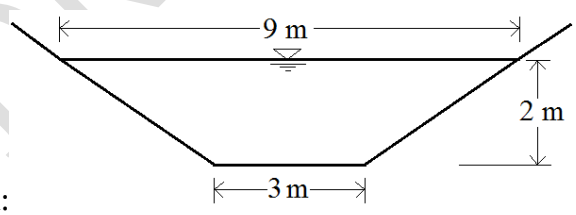

Solution:

We will start with an illustration of the canal:

DRAFT MODULE

From our knowledge about the area of a trapezium, we can find the cross area (A) of flow as follows:

$$A = \frac{1}{2}(b + T)h$$

where A is the cross sectional area (m^2); b the canal bottom width (m); T the water flow top width; and h the effective water depth

Hence, $$A = \frac{1}{2}(3m + 9m)2m$$

$$A = 12\ m^2$$

From the Continuity Equation, Q = AV. Therefore, $15m^3/s = 12\ m^2 \times V$

Hence, $$V = 1.25\ m/s$$

Now let us find the velocity head using the equation, $h_v = \frac{v^2}{2g}$

$$h_v = \frac{(1.25\ m/s)^2}{2(9.81\ m/s^2}$$

$$h_v = 0.08\ m$$

Unit Summary

In this unit we have discussed the nature and properties of fluids at rest and in motion. We encounter fluids in our everyday life. Therefore, the knowledge acquired in the unit will be essential in design, operation and evaluation of hydraulic structures such as irrigation canals, reservoirs and water pipelines.

Unit Test

Answer all questions.

DRAFT MODULE

1.6.1 Water is conveyed at a constant volumetric flow rate of 2.3×10^{-2} m^3/s through a pipeline whose internal diameter is 15 cm. The water flow condition is laminar (Re = 1,400). Find the following:

a) Friction factor
b) Water velocity
c) Velocity head

1.6.2 A fluid mass occupies 2 m^3.Calculate the density, specific weight, and specific gravity if the fluid mass is

a) 4 kg
b) 8 kg
c) 15 kg

1.6.3 A formula that provides a good estimate of the density in kg/m^3 of water is

$$\rho_{water} = 1000 - \frac{(T - 4)^2}{180}$$

where the temperature T is in degrees Celsius.

a) Use this formula and find the density of water at 80°C.
b) What is the error?

Suggested Answers to the Unit Test

Here are the suggested answers for the Unit Test:

Model Answer for Activity 1.6.1:

a) f = 0.0457
b) V = 1.3015 m/s

DRAFT MODULE

c) Velocity head = 0.086 m

Model Answer for Activity 1.6.2:

a) 2 kg = m^3; 19.62 N = m^3; 0.002

b) 4 kg = m^3; 39.24 N = m^3; 0.004

c) 7.5 kg = m^3; 73.6 N = m^3; 0.0075

Model Answers for Activity 1.6.3:

a) 968 kg/m^3

b) -0.4%

DRAFT MODULE

UNIT 2: HEAT AND CALORIMETRY

2.0 Introduction

Welcome to unit 2! In unit 1 we discussed fluid mechanics, however in this topic you will be introduced to key principals in heat transfer and thermodynamics.

2.1 Objectives

By the end of this unit, you should be able to:

- Differentiate heat from temperature
- State four examples of temperature scales
- Convert temperature from one scale to another scale
- Measure the amount of heat transfer using a calorimeter

Key terms

Ensure that you understand the key term phrases used in this unit as listed below.

- Temperature
- Heat
- Specific heat
- Calorimetry

2.2 Temperature

From our primary school knowledge we have always defined temperature as the degree of hotness or coldness. This definition is based on our sense of touch: cold or hot. We generally consider a hot oven to have high temperature than a cold tray of ice. However defining temperature by solely depending on the sense of touch might give us wrong results. For example, if your hands were placed in hot water and then you shift to place the same hands in lukewarm water you will feel cold, on the contrary if you place the hands in the cold water first and then shift them to lukewarm water you would feel water.

We shall now define temperature as, *the measure of average kinetic energy (thermal energy) of the molecules of the body*. Temperature is directly proportional to the average molecular kinetic energy. The greater the average kinetic energy of the molecules of a body, the greater is the temperature of the body. In this case we may conclude that temperature of a

DRAFT MODULE

body depends only on the molecular kinetic energy and it is independent of mass of a substance.

When we bring together two bodies of different temperatures into contact, heat flows from a body at higher temperature to the body at lower temperature till the temperatures of the two bodies are the same. Temperature guides the direction of heat flow between two bodies of different temperatures in contact.

2.2.1 Temperature Scales

There are four temperature scales

Celsius Scale

On this scale, the ice point (melting point) is marked as 0°C and the steam point (boiling point) is marked as 100°C. Both the melting and boiling points are taken at normal atmospheric pressure. The interval between these points is divided into 100 equal parts. Each of these divisions gives one degree Celsius (1°C). If the thermometer is needed to measure temperatures outside the ice and steam points, then the scale markings are continued below the 0°C mark and above 100°C mark. The distance between the consecutive marks on the scale remains the same.

Fahrenheit Scale

On this scale, the ice point is marked as 32°F and the steam point is marked 212°F. The interval between these two reference points is divided into 180 equal parts. Each division is called degree Fahrenheit and is written as °F

Temperature scale	Freezing Point of Water	Boiling Point of Water	SI Unit
FAHRENHEIT SCALE	32°F	212°F	F
CELSIUS SCALE	0°C	100°C	C
KELVIN SCALE	273.15K	373.15K	K

NEET MODULE

REAUMER SCALE	0°R	80°R	R

2.2.2 **Conversion Equations**

The relationship among Celsius, Fahrenheit and Reaumur scales is given as

$$t_C \div 100 = (t_F - 32)/180 = t_R \div 80 \qquad 2.1$$

Other relationships

a. $F = 1.8C + 32$ 2.2

b. $K = C + 273.15$ 2.3

Example 1

If the temperature of the room is 20°C, what is its temperature in degrees Fahrenheit?

Solution: We are going to apply equation 2.2 to convert degrees Celsius to degrees Fahrenheit.

Then $F = 1.8 \times 20 + 32 = 68°F$

Kelvin Scale and the absolute Zero

The Kelvin scale is setup so that its zero point is the coldest possible temperature--absolute zero, at which point a substance would have zero internal energy. This is -273.15 °C, or -459.69 °F. Absolute zero can never be reached, but there is no limit to how close we can get to it. Scientists have cooled substances to within 10^{-5} kelvins of absolute zero. How do we know how cold absolute zero is, if nothing has ever been at that temperature? The answer is by graphing Pressure vs. Temperature for a variety of gases and extrapolating.

DRAFT MODULE

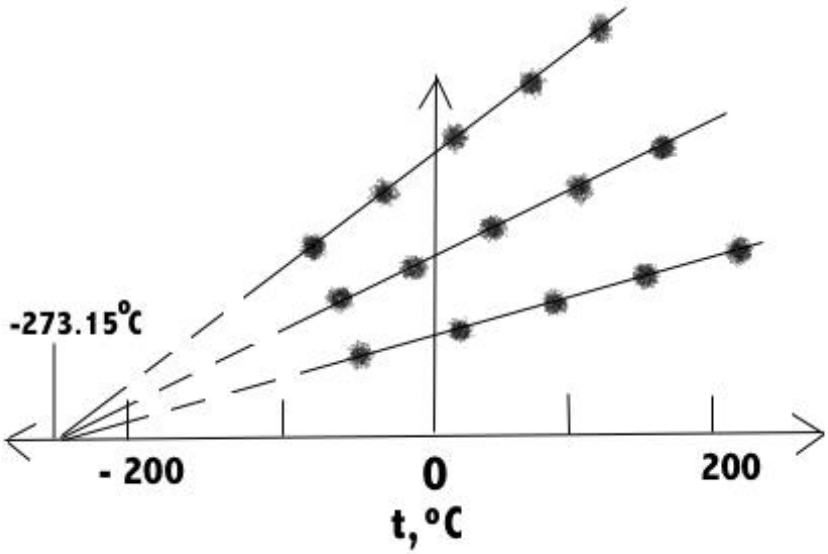

The Triple Point of Water

We can define the triple point of water as a point where water in a solid, liquid and gas states can coexist in aquarium and this occurs only at a unique temperature and pressure. The pressure at the triple point of water is 4.58 mm of Hg and the temperature is 273.16K or 0.01°C.

Activity 1

An object has a temperature of 50°F. What is its temperature in degrees Celsius and in Kelvin? [10°C; 283K]

2.3 Specific heats

Specific heat is the energy that is transferred from one body to another due to temperature difference between two bodies. Or is the transfer of internal (thermal) energy from one body to another. The SI unit for heat is joule, but can also be measured in calories Heat transfer depends on temperature gradient

2.3.1 Heat capacity

The amount of heat required to raise its temperature by 1°C.

Heat capacity is also called thermal capacity

Heat capacity = mc

Specific heat

DRAFT MOE

Is the heat capacity of a substance per unit mass

c = Heat capacity/m

Alternatively we may define heat capacity as the amount of heat required to raise the temperature of 1 kg of a substance by 1°C or 1K. The SI Unit is J/Kg/°C or J/Kg/K Specific heat is represented by c.

2.3.2 Water Equivalent

The mass of water that will absorb or loose the same amount of heat as the body for the same rise or fall in temperature is known as water equivalent. Water equivalent is measured in kg. For instance, if you are told that the water equivalent for a body is 12kg, this means that when a body is heated through 12°C, it will absorb the same amount of heat as absorbed by 12kg.

$Q = w\,\Delta T$

But $Q = cm\,\Delta T$

Equating the two equations we have

$w\Delta T = cm\,\Delta T$

$w = mc$

From Equation ---- we may conclude that water equivalent and heat capacity of a body are numerically equal.

2.3.4 Molar Specific Heat

Molar specific heat of a solid (liquid) is defined as the amount of heat required to raise the temperature of 1 mole of the solid (liquid) through 1°C OR 1 K. We can now represent the amount of heat Q required to raise the temperature ΔT of n moles is presented as:

$Q = nC\,\Delta T$ 2.5

But n = m/M and capital c (C) stands for molar specific heat.

$C = Mc$ 2.6

2.3.5 Specific heat of a gas

We shall adopt the same definition for specific heat as the one used in solids and liquid. On the contrary, the situation with gasses is quite different. When a gas is heated, there may be large changes in pressure and volume. When we want to define a specific heat, it is necessary to specify the particular conditions of pressure and volume. A gas can have any value of specific heat depending on how the heating has been carried out.

DRAFT MODULE

We are going to consider two practical conditions in which we have values of specific heat of a gas: specific heat of a gas at constant volume (C_v) and specific heat of a gas at constant pressure (C_p).

Specific heat at constant volume: The amount of heat required to raise the temperature of 1 mole of the gas through 1°C at constant volume is referred to as specific heat at constant temperature. It is measured in J/kg/K or cal/g/K. If we are given 1 mole of the gas instead of 1g, then we will be dealing with molar specific heat of a gas at constant volume.

Molar Specific heat of a gas at constant volume is the amount of heat required to raise the temperature of 1 mole of the gas through 1°C at constant volume. We use capital C_v to denote molar specific heat at constant volume where as c_v represents specific heat at constant volume.

$C_v = Mc_v$ 2.7

Where M = Molecular mass of the gas and the SI units of C_v J/mol/K or cal/mol/K.

Specific heat of a gas at constant pressure: this is the amount of heat required to raise the temperature of 1g of the gas through 1°C at constant pressure. The SI units are the same as those for specific heat capacity at constant volume. On the other hand, molar specific heat at constant pressure is defined as the amount of heat required to raise the temperature of 1 mole of a gas through 1 °C at constant pressure.

$C_p = Mc_p$ 2.8

Relationship between C_v and C_p

a. $\gamma = \frac{C_p}{C_v} = \frac{Mc_p}{Mc_v} = \frac{c_p}{c_v}$

b. $C_v = \frac{3}{2}R$; $C_P = \frac{5}{2}R$ for monoatomic gas

c. $C_v = \frac{5}{2}R$; $C_p = \frac{7}{2}R$ for diatomic gas

R = 8.31J/mol/K

When you want to calculate the amount of heat required to raise the temperature of a gas you use equation 2.5 but you substitute C_v and C_p for specific heat (C):

Q at constant volume: $Q = n\,C_v\,\Delta T$ 2.8

Q at constant pressure: $Q = n\,C_p\,\Delta T$ 2.9

DRAFT MODULE

Example:

How much heat is required to raise the temperature of an ideal monoatomic gas by 10K if the gas is maintained at constant pressure?

Solution:

Lets consider what we have first: n = 1 mole, ΔT = 10K, R = 8.31J/mol/K, we are also told that the gas is monoatomic and is at constant pressure. In this case we are going to employ equation 2.9.

$Q = n\, C_p\, \Delta T$

$C_P = \frac{5}{2} R = \frac{5}{2} \times 8.31 J/mol/K$

$Q = 1mol \times \frac{5}{2} \times 8.31 J/mol/K \times 10\ K = 207.5\ J$

Activity 3.

What is the specific heat of a substance if 36 Kcal of heat is needed to raise 4.5 Kg of the metal from 20° C to 42°C [0.36 Cal/g/°C]

2.3 Calorimetry

Is the experimental technique for quantitative measurement of heat exchange. The law of heat exchange is applied in calorimetry. Law of heat exchange states that, "*for completely an isolated closed system, no energy can flow into or out of the system.*"

Alternatively, **Heat lost** = **Heat gained**.

A calorimeter is used to determine the specific heat of a substance.

Heat lost by the substance is gained by and the calorimeter.

Heat gained by the calorimeter

$= (m_1+w) \times c' \times (T - T_1)$

Heat lost by the substance

$= m_2 c(T_2 - T)$

Where:

m_1=Mass of water in the calorimeter

w = Water equivalent of the calorimeter

DRAFT MODULE

T_1= Initial temperature of water + calorimeter

m_2= Mass of the substance

T_2= Initial temperature of a substance

T= Final temperature

c = specific heat capacity of the substance

c'= Specific heat of water

Heat gained = heat lost

$$(m_1+w) \times c' \times (T - T_1) = m_2c(T_2 - T) \qquad 2.4$$

And c can be given as

$$c = [(m_1+w) \times c' \times (T - T_1)]/m_2(T_2 - T)$$

Example

When a piece of metal of mass 48.3g at 10.7 °C was immersed in a current of stream at 100 °C, 0.762g of steam was found to condense. Calculate the specific heat of the metal (L_V of steam: 536 cal).

Heat gained = 48.3×c×(100-10.7) cal

Heat lost = mass of condensed matter × latent heat of steam

= 0.762×536 cal

Then: 48.3×c×(100-10.7) cal = 0.762×536 cal

c = (0.76×536)÷ [48.3×(100 – 10.7)

= 0.095 cal/g/°C.

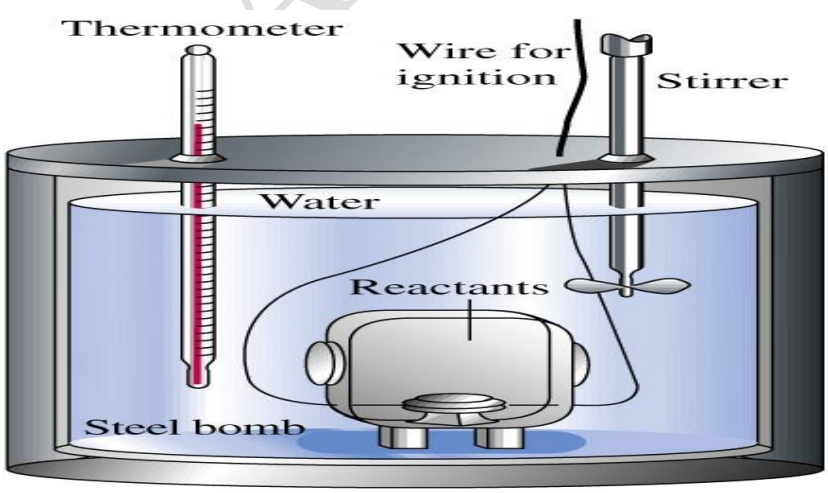

DRAFT MODULE

The outer and inner surfaces of the calorimeter are polished heat to reduce heat loss due to radiation

The space between a calorimeter and the insulating jacket is filled with some poor conductor (e.g. Air, cotton) to avoid heat loss by conduction

The lid is insulated to avoid heat loss by convection. The insulated lid has two holes, one for stirring (mixing contents) and the other for thermometer.

Activity 2

A copper block of mass 2.5 kg is heated in a furnace to a temperature of 500°C and then placed on a large ice block. What is the maximum amount of ice that can melt? (Specific heat of copper = 0.39 J/g/°C; Heat of fusion of water = 335J/g) [1.455kg]

2.6 Practice Activity

In an experiment on the specific heat of a metal, a 0.20 kg block of the metal at 150°C is dropped in a copper calorimeter (of water equivalent 0.025 kg) containing 150 cm^3 of water at 27°C. The final temperature is 40°C. Compute the specific heat of the metal. [0.434J/g/°C]

2.7 Unit summary

In this unit we have discussed important concepts of heat and temperature which will lead to heat transfer and thermodynamics. We have seen that though heat and temperature are related but they are not the same. Specific heat, mass and temperature are very significant in calorimetry. Calorimetry is the science of measuring heat.

Unit Test

1. If two temperatures differ by 25° on a Celsius scale, what is the difference on Fahrenheit scale?
2. A calorimeter contains 70.2 g of water at 15.3°C. If 143.7g of water at 36.5°C is mixed with it, the common temperature is 28.7°C. Find the water equivalent of the calorimeter.
3. A piece of iron of mass 16g is dropped at a temperature of 112.5°C into a cavity in a block of ice of which it melts 2.5g. If the latent heat of fusion of ice is 80 cal/g, find the specific heat of iron.

DRAFT MODULE

Suggested Answers to Unit Activities

Activity 1

10°C; 283K

Activity 2

1.455kg

Activity 3

0.36 cal/g/°C

Practice Activity

0.434J/g/°C

Unit Test

1. 45°F
2. 13.4g
3. 0.11cal/g/°C

DRAFT MODULE

UNIT 3: Heat and Heat Transfer

3.0 Introduction

Welcome to Unit 2. In this unit, we will discuss concepts of heat, its transfer and measurement. You will agree that heat forms an integral part of our daily life. For example, we need heat to cook our food and to keep us warm. This unit is therefore of prime importance because it will help us deepen our understanding of heat, its measurement and transfer.

3.1 Objectives

By the end of this unit, you should be able to:

1) Understand and state the different concepts of heat transfer
2) Acquire knowledge on measurement of temperature and heat
3) Apply the laws of heat transfer in solving problems related to the same

Key Terms

Ensure that you understand the key terms used in this unit as listed below.

- Heat
- Temperature
- Latent heat
- Specific heat
- Sublimation

- Convection
- Radiation
- Conduction
- Heat capacity
- Sensible heat

DRAFT MODULE

3.2 Heat and Temperature

3.2.1 Heat

We will start by discussing what heat is and have a quick overview of how heat gets transferred from one location to another. Heat is a form of energy. As you are aware, the molecules of a body are in constant motion. The moving molecules possess kinetic energy referred to as heat. Heat is transferred from a warmer to a colder body because of the temperature difference between the two bodies.

3.2.2 Temperature

We can define temperature as the intensity of heat or a measure of how hot or cold an object is. In other words, temperature is an indication of molecular activity since (as we saw earlier on) moving molecules possess kinetic energy referred to as heat. In the SI system, temperature is measured in degrees Celsius (named after Anders Celsius). Its temperature scale is referred to as the centigrade scale. The scale involves choosing two fixed points (i.e. two easily reproducible temperatures), and dividing the interval between them into a number of 'degrees'.

Anders Celsius chose the temperature of melting ice and boiling water (both at normal atmosphere), and the arbitrary number 100 degrees. The Celsius scale is still defined this way but an improvement has been made in which the scale is divided and a more reliable fixed point has been introduced.

The other temperature unit is Kelvin (named after Lord Kelvin). This is referred to as the absolute temperature scale. Lord Kelvin showed that a temperature scale might be divided in a way which does not depend on the properties of a particular substance.
He proposed that 'Zero' must be located at the lowest temperature possible. Both theoretical considerations and practical experience indicate that it is impossible to reach a temperature lower than -273.15^{o}C and this is known as the absolute zero temperature.

DRAFT MODULE

Th e resulting scale is the Kelvin Thermodynamic Temperature Scale and its unit is the Kelvin (K).

EqCelsius temperature (ºC) (t) = Kelvin temperature (K) – 273.15 (T)

Or

EquaAbsolute temperature (K) = Celsius temperature (ºC) + 273.15

Another temperature scale is known as the Fahrenheit. Its relationship to the centigrade scale is as follows:

1Celsius temperature (ºC) (t) = {Fahrenheit temperature (F) – 32 (t)} x 5/9]

Or

EFahrenheit temperature (F) = [{Celsius temperature (ºC) (t) x 9/5} + 32]

3.2.3 Temperature and Heat Measurements

Let us now look at the instruments and methods used to measure heat intensity. Table 1 presents a list of the measurements and their respective instruments:

Table 1. Instruments and methods for measuring heat intensity

Measurement	**Instrument/Method of Measurement**
Thermal expansion	Bi-metallic thermometers; Liquid-in-glass (mercury, alcohol) thermometers; Pressure thermometers
Thermo-electricity	Thermocouple
Resistance	Resistance thermometers; Thermistors (semi-conductor); Integrated circuit detectors (temperature transducers)

DRAFT MODULE

Radiation	Pyranometers

It is worth noting that the most common thermometers are mercury–in– glass.

Before we proceed, let us pause and define some of the important terms which we will be using in the discussions that follow. One of such terms is ambient temperature. Ambient temperature is the temperature of the medium surrounding a body or system, e.g. room air temperature. The other term is specific heat, the dimensionless ratio between the thermal capacity of a material to that of water. Heat quantity is measured in Joules. The amount of heat required to raise the temperature of one gram of water by 1° Kelvin is 4.187 Joules. This quantity is equivalent to one calorie of heat.

3.3 Specific Heat

The actual thermal capacity (specific heat capacity) measured in J/(kg°K) is often listed as specific heat. It is defined as the heat capacity of a substance per unit mass.
Specific heat is essentially a measure of how thermally insensitive a substance is to the addition of energy. The greater the material's specific heat, the more energy must be added to a given mass of the material to cause a particular temperature change.

For gases, heat capacity at constant pressure is a strong function of temperature.
Heat capacity is an additive property, i.e. the heat capacity of a mixture of gases can be determined from the heat capacities of the constituents weighted accordingly.
The heat capacities of solids cannot be predicted from fundamental relationships but they are amenable to experimental measurement. However, a particularly useful method of estimating heat capacity in the absence of experimental data is the Kopp's rule which is based on the fact that heat capacity is an additive property. It may be stated as follows:

The heat capacity of a solid compound is approximately equal to the sum of the heat capacities of its constituents.

DRAFT MODULE

The heat capacities of liquids are generally greater than those of solids and gases; heat capacity usually increases with temperature. For foodstuff, heat capacity is strongly dependent upon moisture content.

3.4 Sensible Heat

Sensible heat is the heat that causes a temperature change when there is a heat transfer. We can also define sensible heat as a measure of the energy that accompanies a temperature change. A good example of sensible heat is heat moving through the walls of a home causing a temperature rise in the process. We can determine total sensible heat using the following equation:

$$q_s = mc\ (t_1 - t_2) \qquad \textbf{3.1}$$

where q_s = total sensible heat (J); m = mass of material (kg); c = specific heat capacity of the material (J/(kg°K); t_1 = temperature (°C) of the material at condition 1; and t_2 = temperature (°C) of the material at condition 2.

3.5 Latent Heat

Latent heat is the heat that causes a change in state but no change in temperature. The heat that is absorbed when ice changes to water (solid to liquid) is known as latent heat of fusion (L_f). When boiling water changes to vapour (liquid to vapour), the heat involved is latent heat of vapourisation (L_v).

You will recall that at normal pressures, most chemical compounds and elements possess three different states (solid, liquid, gas) at different temperatures. In these cases, the transition from solid to gaseous state requires an intermediate liquid state. However, for some elements or substances at some pressures, the material may pass directly from solid to gaseous state. This can occur if the atmospheric pressure exerted on the substance is too low to stop the molecules from escaping from solid state. When a solid changes to vapour without going through the liquid phase (solid to vapour), the heat

DRAFT MODULE

involved is referred to as latent heat of sublimation (L_s). Carbon dioxide is a common example of chemical compounds that sublime at atmospheric pressure. A block of solid CO_2 (dry ice) at room temperature and at atmospheric pressure will turn to gas without becoming a liquid. The opposite of sublimation is deposition. The formation of frost is an example of meteorological deposition.

Let us now look at an example on the heat involved when water evaporates to water vapour. This occurs over a wide range of temperatures.

When air moves across the surface of water, some of the air's sensible heat is converted to latent heat causing the air temperature to drop. The latent heat of vaporisation changes with temperature as presented in **Table 2**.

Table 2. Latent Heat of Vaporisation for Water

°C	**kJ/kg**
0	2500
30	2430
100	2256

You should know that different materials have different properties hence latent heat of vaporization and latent heat of fusion vary from one material to another. **Table 3** presents latent heat properties of different substances.

DRAFT MODULE

Table 3. Latent heat of fusion and latent heat of vaporisation for various substances

Substance	Melting Point (°C)	Latent Heat of Fusion (J/kg)	Boiling Point (°C)	Latent Heat of Vaporization (J/kg)
Helium	− 269.65	5.23×10^3	− 268.93	2.09×10^4
Nitrogen	− 209.97	2.55×10^4	− 195.81	2.01×10^5
Oxygen	− 218.79	1.38×10^4	− 182.97	2.13×10^5
Ethyl alcohol	− 114	1.04×10^5	78	8.54×10^5
Water	0.00	3.33×10^5	100.00	2.26×10^6
Sulfur	119	3.81×10^4	444.60	3.26×10^5
Lead	327.3	2.45×10^4	1 750	8.70×10^5
Aluminum	660	3.97×10^5	2 450	1.14×10^7
Silver	960.80	8.82×10^4	2 193	2.33×10^6
Gold	1 063.00	6.44×10^4	2 660	1.58×10^6
Copper	1 083	1.34×10^5	1 187	5.06×10^6

When a gas cools, it eventually condenses – that is, it returns to the liquid phase. The energy given up per unit mass is called the latent heat of condensation (L_c) and is numerically equal to the latent heat of vaporisation. Likewise, when a liquid cools, it eventually solidifies, and the latent heat of solidification is numerically equal to the latent heat of fusion.

Activity: Phase Change Example

You will recall that there are three states (or phases) of matter namely gas, liquid and solid. In order for us to understand the role of latent heat in phase changes, consider the energy required to convert 1.0 g cube of ice at -30.0°C, to steam at 120°C. Figure 11 indicates the experimental results obtained when energy is gradually added to the ice. Let us examine each portion of the curve.

DRAFT MODULE

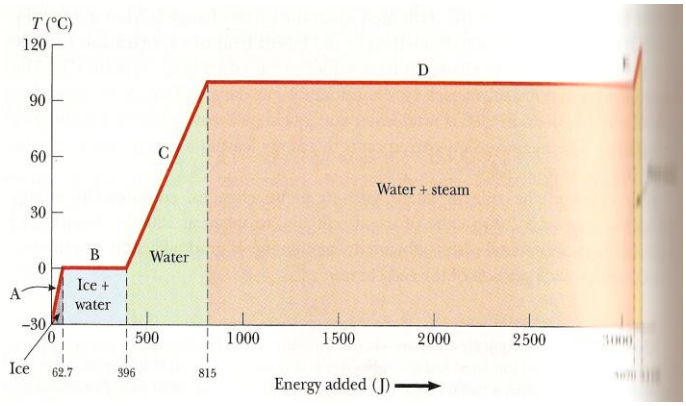

Figure 11. A plot of temperature versus energy added when 1.00g of ice initially at -30.0°C is converted to steam at 120.0°C

Part A. On this portion of the curve, the temperature of the ice changes from -30°C to 0°C. Because the specific heat of ice is 2090 J/kg°C, we can calculate the amount of energy added by:

$$Q = m_i c_i \Delta T$$
$$Q = (1.0 \times 10^{-3}\, kg)(2090 J/kg.°C)(30°C)$$
$$Q = 62.7 J$$

Part B. When the temperature of the ice reaches 0°C, the ice-water mixture remains at this temperature, even though energy is being added, until all the ice melts. The energy required to melt 1.0 g of ice is:

$$Q = m_i L_f = (1.00 \times 10^{-3} kg)(3.33 \times 10^5 J/kg) = 333 J$$

Thus we have moved to the 396 J (62.7J + 333J) mark on the energy axis in Figure 11.

Part C. Between 0.0°C and 100.0°C, no phase change occurs, and so all the energy added to the water is used to increase its temperature. The amount of energy necessary to increase the temperature from 0.0°C to 100.0°C is:

$$Q = m_w c_w \Delta T$$
$$Q = (1.00 \times 10^{-3} kg)(4.19 \times 10^3 J/kg.°C)(100.0°C)$$
$$Q = 419 J$$

DRAFT MODULE

Part D. At 100.0°C, another phase change occurs as the water changes from water at 100.0°C to steam at 100.0°C. The water-steam mixture remains at 100.0°C, even though energy is being added, until all of the liquid has been converted to steam. The energy required to convert 1.00g of water to steam at 100.0°C is:

$$Q = m_w L_v$$
$$Q = (1.00 \times 10^{-3}\, kg)(2.26 \times 10^{6}\, J/kg)$$
$$Q = 2.26 \times 10^{3}\, J$$

Part E. In this portion of the curve, as in parts A and C, no phase change occurs; thus, all energy added is used to increase the temperature of the steam. The energy that must be added to raise the temperature of the steam from 100.0°C to 120°C is:

$$Q = m_s c_s \Delta T$$
$$Q = (1.00 \times 10^{-3}\, kg)(2.01 \times 10^{6}\, J/kg.°C)(20.0°C)$$
$$Q = 40.2 \times 10^{3}\, J$$

The total amount of energy that must be added to change 1g of ice at -30.0°C to steam at 120°C is the sum of the results from all the five parts of the curve, which is equal to 3.11×10^3J. Conversely, to cool 1g of steam at 120.0°C to ice at -30.0°C, we must remove 3.11×10^3J of energy. The results show that a relatively large amount of energy is transferred into the water to vaporise it to steam.

Now, let us imagine reversing this process, there is a large amount of energy transferred out of steam to condense it into water. This is why a burn to your skin from steam at 100°C is much more damaging than exposure of your skin to water at 100°C. A very large amount of energy enters your skin from steam and the steam remains at 100°C for a long time while it condenses. Conversely, when your skin makes contact with water at 100°C, the water temperature immediately begins to drop as energy is transferred from the water to your skin.

3.6 Thermal Capacity

DRAFT MODULE

We define thermal (heat) capacity as the ability of a material to absorb and hold heat. Thermal capacity is measured in J/(g K). For example, the thermal capacity of water is 4.187kJ/(kg K) or J/(g K). Thermal capacity is also defined as the amount of energy needed to raise the temperature of 1g sample by 1°C.

3.7 Total Heat Content

Bodies with great mass can store large quantities of heat, even at low temperatures. For example, thick masonry walls are slow to warm up in the heat of the day and slow to cool down during a cool night. Also, a match has high temperature and little heat content. A large tank of water may be at low temperature but still have large heat content.

3.8 Heat Transfer Theory

Every body contains some internal energy. One component of internal energy is thermal (heat). Heat will transfer from one body to another if there is a temperature difference between the bodies. When designing an agricultural building, an engineer is often required to accelerate or slow down heat transfer. Steady state (constant in time) heat transfer problems can usually be solved with relatively simple equations. Non-steady state (varies with time) heat transfer problems require more complicated solutions.

3.8.1 Types of Sensible Heat Transfer

There are three modes of sensible heat transfer: conduction, convection and radiation.

3.8.1.1 Conduction

In conduction, heat energy is passed from molecule to molecule in a material. For heat to be conducted it is essential that there be physical contact between particles and some temperature difference. Thermal conductivity is a measure of how easily heat is passed

DRAFT MODULE

from particle to particle. The rate of heat flow depends on the magnitude of temperature difference and the thermal conductivity of the material.

You should take note that the thermal conductivity of a material is affected by density, size of fibres or particles, the degree of bonding between particles and their arrangement, moisture content, and temperature. The ability of many materials to conduct heat has been determined experimentally.

$$q = Ak\left(\frac{dt}{dx}\right) \qquad \textbf{3.2}$$

q = heat conduction rate (W)
A = cross-sectional area normal to the direction of heat flow (m2)
k = thermal conductivity of material (W/m2 K)
dt/dx = temperature gradient (K/m)

The term k(dt/dx) is known as Fourier's first law of conduction.

The above equation shows us that the rate of heat conduction is directly proportional to:

- The cross-sectional area, A;
- The thermal conductivity of the substance, k;
- The temperature gradient, dt/dx; and
- Values of k vary considerably.

It is worthy for us to know that metals have high thermal conductivities, the best being silver (k = 419 W/m ^{o}C), copper (k = 388 W/m ^{o}C), aluminium (k = 203 W/m ^{o}C). Non-metals have in general relatively low values of k, e.g. a cork has k = 0.04 W/m ^{o}C and is often used as a heat insulator.

Activity: Example

DRAFT MODULE

A small building has concrete walls 150 mm thick. If the thermal conductivity of the concrete is 1.1 W/m °C, what is the rate of heat leakage through a wall 2.5 m high and 5 m long when the inside temperature is 20°C and the outside temperature is 2°C?

Let us begin by illustrating the information contained in the question.

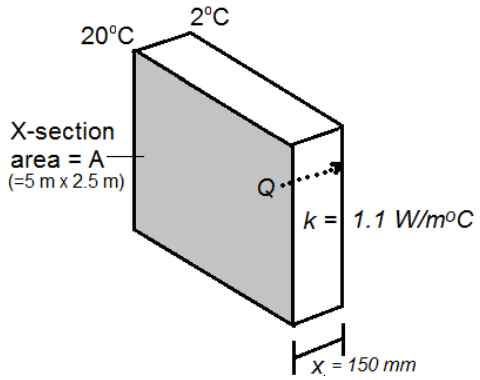

Figure 12. A single layered concrete wall

Let us Equation 1 to solve the problem. From this equation, we have:

$$Q = kA\left(\frac{T_1 - T_2}{x}\right) = \frac{\frac{1.1}{1} \times 1.5 \times 5(20 - 2)}{0.150}$$

$$Q = 1100 \text{ W} = 1.10 \text{ kW}$$

Conduction through a composite wall

You will agree that in many cases heat transfer involves more than one material. Let us consider a wall with three layers having a rate of heat transfer, Q passing through each layer. Here is our illustration for this:

DRAFT MODULE

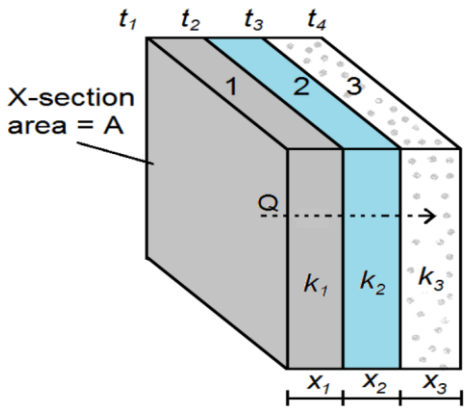

Figure 13. A 3-D illustration of a composite wall

From the 3-D illustration in Figure 13, we can extract a 2-D diagram that follows. You will notice that the 2-D diagram is the front view of the 3-D diagram.

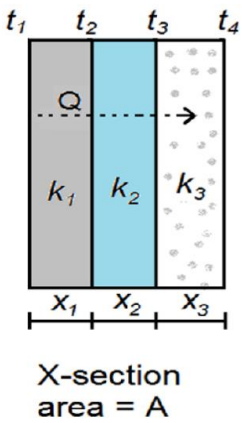

Figure 14. A 2-D illustration of a composite wall

We can now, using respective notations presented in the Figure 14, write the equations that define the rate of heat transfer through each of the three layers. The rate of heat transfer through the first layer is as follows:

$$Q = Ak_1\left(\frac{t_1 - t_2}{x_1}\right) \qquad \textbf{3.3}$$

Now, we can define the equation for the rate of heat transfer through layer two as follows:

DRAFT MODULE

$$Q = Ak_2\left(\frac{t_2 - t_3}{x_2}\right) \qquad \textbf{3.4}$$

Finally, we can define the rate of heat transfer through layer 3 as:

$$Q = Ak_3\left(\frac{t_3 - t_4}{x_3}\right) \qquad \textbf{3.5}$$

Using the equations that we have defined above, we can determine the rates of heat transfer through each of the three layers and the interface and surface temperatures. You will agree that it may not be easy for us to accurately measure the interface temperatures (t_2 and t_3) unless we have some sophisticated means of doing so. In view of this, it is usually unlikely that the interface temperatures are known while the outside temperatures are easily measured (known). We can compute the values of the interface temperatures by combining the three equations and simplify the result. The section that follows presents we can do this.

The first step is to transpose equations (1), (2) and (3). To transpose the equations, we will group temperature terms together in each equation by bringing them to the left side of the equation. Equation 2 becomes:

$$t_1 - t_2 = \frac{Qx_1}{k_1 A} \qquad \textbf{3.6}$$

while equation 3 is:

$$t_2 - t_3 = \frac{Qx_2}{k_2 A} \qquad \textbf{3.7}$$

DRAFT MODULE

and equation 4:

$$t_3 - t_4 = \frac{Qx_3}{k_3 A} \qquad \textbf{3.8}$$

If we add equations (4), (5) and (6) we will have:

$$t_1 - t_4 = \frac{Q}{A}\left(\frac{x_1}{k_1} + \frac{x_2}{k_2} + \frac{x_3}{k_3}\right) \qquad \textbf{3.9}$$

Making Q the subject of the formula gives us

$$Q = \frac{A(t_1 - t_4)}{\frac{x_1}{k_1} + \frac{x_2}{k_2} + \frac{x_3}{k_3}} \qquad \textbf{3.10}$$

Based on what we have found in equation 9, let us have a close look at t_4. You will agree that t_4 is the same as t_{3+1}. The number of layers in the composite wall from which we have derived the equation is 3. This implies that if the number of layers, 3, is replaced by n, the subscript for the latter temperature term would be t_{n+1}. Hence for n layers,

$$Q = \frac{A(t_1 - t_{n+1})}{\sum\left(\frac{x}{k}\right)} \qquad \textbf{3.11}$$

DRAFT MODULE

Example

A brick wall 250 mm thick is faced with concrete 50 mm thick. The brick has a coefficient of thermal conductivity of 0.69 W/m K while that of the concrete is 0.93 W/m K. The temperature of the exposed brick face is 30ºC and that of the concrete is 5oC.

Determine the heat loss per hour through a wall 10 m long and 5 m high. Find the interface temperature.

We can illustrate this problem as follows:

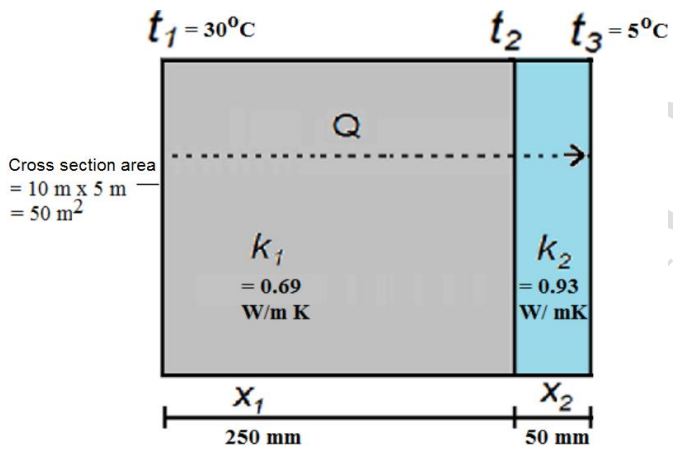

Figure 15. A two layered (composite) wall

a) We can find the rate of heat loss as follows:

$$Q = \frac{A(t_1 - t_3)}{\frac{x_1}{k_1} + \frac{x_2}{k_2}} = \frac{(10 \times 5)(30-5)}{\frac{0.25}{0.69} + \frac{0.05}{0.93}} \times \frac{(\mathrm{m})(\mathrm{m})\mathrm{K}}{\frac{\mathrm{m}}{\mathrm{W/mK}} + \frac{\mathrm{m}}{\mathrm{W/mK}}}$$

$$= 3{,}004\ J/\mathrm{s} = 3.0\ kJ/\mathrm{s}$$

Heat lost per hour = 3.004 kJ/s x 3600 s/hr

= 10, 815 kJ/h

b) Now, let us find the interface temperature. We can do this using either the brick wall or the concrete.

For the brick wall:

$$Q = \frac{A(t_1 - t_2)}{\frac{x_1}{k_1}}$$

Therefore,

$t_2 = t_1 - (Qx_1/k_1A)$

$= 30 – (3004 \times 0.25)/(0.69 \times 50) = 8.2^oC$

Alternatively you can use the concrete to get the same answer {i.e. $t_2 = t_3 + (3004 \times 0.05)/(0.93 \times 50) = 8.2^oC$}

3.8.1.2 Convection

You may recall that at ordinary temperatures most heat transfer in liquids and gases is by convection. In convection heat transfer, heat is transferred to or from an object by the mass movement of either a liquid or gas. We will now discuss heat transfer by convection in more detail.

3.8.1.2.1 Rate of heat transfer by convection

You should note that the rate of heat flow depends on the temperature of the moving fluid and the rate of flow. Convection transfer can occur in any liquid or gas. There are many factors that influence the value of convective heat transfer. Due to that, it is almost impossible to determine individual effects of each of the factors by direct experimental

DRAFT MODULE

methods.

You may be aware that the heat transfer rate per unit area is dependent on those physical properties which affect the flow pattern. These properties are as follows:

- Fluid viscosity and density;
- The specific heat capacity of the fluid;
- The fluid's thermal conductivity (thermal properties);
- The linear dimension of the surface
- The velocity of flow of the fluid over the surface;
- The temperature difference;
- The factor determining the natural circulation effect caused by the expansion of the fluid on heating; and
- Acceleration due to gravity.

Let us now define the rate of heat transfer by convection as follows:

Equation 32 $$q_c = hA(t_s - t)$$

where q_c = convective heat transfer rate (W)

h = heat transfer coefficient ($W/m^2 . K$)

A = surface area (m^2)

t_s = surface temperature (K)

t = free stream fluid temperature (K)

You should know that the laws governing the rate of heat transfer by convection are very complex because complex fluid dynamic phenomena are involved. We can determine the value of the heat transfer coefficient, h, from relationships that have been found experimentally.

3.8.1.2.2 Radiation

Classification of Heat Transfer by Convection

DRAFT MODULE

We can classify heat transfer by convection is usually classified as either natural or forced convection. Natural convection involves fluid motion resulting from differences in fluid density and the action of gravity while forced convection involves fluid motion created by a fan or pump. You should note that heat transfer coefficients for natural convection are generally much lower than those for forced convection.

Let us now discuss an example of heat transfer by natural convection between a cold fluid and a hot surface. The fluid in immediate contact with the surface is heated by conduction, expands and becomes lighter, and rises due to the density differences.
Forced convection heat transfer is determined by the flow conditions and by the fluid properties. The flow conditions may be laminar or turbulent and we can determine the flow condition using the Reynolds number. The fluid properties in question include density and viscosity and can be determined using the Prandtl number.

Under forced convection, the convection currents are sometimes assisted by means of a pump to enhance the transfer of heat. For example, a small pump is set up in the cooling system of motor vehicle engines to assist the convection currents.

3.8.1.3 Radiation

Let us now discuss heat transfer by radiation. The transfer of heat energy by radiation requires no transfer medium. Since no medium is required for the heat energy transmission, the phenomenon is closely allied to the transmission of light or radio waves.

A classic example of heat energy transmission by radiation is the transfer of heat energy from the sun to the earth. You should note that the temperature level of the emitting surface largely controls the quantity of the heat transmitted.

We need to note that the amount of energy a body will emit or absorb by radiation is affected by whether its surface is dark or light. Radiant energy transfer follows the same laws as light. The laws are:

- It is transmitted through space
- It follows a straight-line path

DRAFT MODULE

- It can be reflected
- It can be absorbed
- It can produce a heating effect or be re-transmitted

It is important for us to know that radiant energy must first be absorbed by a substance in order for it to be converted to heat. Also, heat cannot be transmitted by radiation through an opaque material but is instead partially absorbed by and reflected from the surface depending on the nature of the body and the wavelength of the radiant energy. You should know that the atmosphere, glass and translucent materials pass a substantial amount of radiant energy while absorbing and reflecting some. A glass window pane is practically transparent to radiant energy from the sun but it is almost entirely opaque to radiation emitted at a longer wavelength by objects within an enclosure (green house effect).

Prevost's theory of exchanges

We should note that a body emits radiation at a rate which is determined by the nature of its surface and its temperature. The body will absorb radiation at a rate which is determined by the nature of its surface and the temperature of its surroundings. Radiant energy is transferred between two bodies in both directions and not just from a warmer to a cooler body. However, the net transfer is from warm to cool bodies.

It follows that if the surface of a body is such that the body is a good absorber of radiation, it must be an equally good emitter otherwise its temperature would rise above that of its surroundings. In particular, matt black surfaces are the best absorbers and the best emitters of radiation; highly polished silver surfaces are both poor emitters and poor absorbers.

Black Body Radiation

You may be aware that objects vary in their capacity to absorb, reflect, and emit radiation. For example, if you put two objects (one shiny and the other one dark) made out of the same material under direct sunlight, the objects' temperatures would rise at

DRAFT MODULE

different rates because of the different natures of solar radiation absorption, reflection and emission. A "black" body absorbs all radiation it receives and reflects none. It also emits radiation at the maximum rate for a given temperature. However, there are no true black bodies in life. Real (gray) bodies reflect some of the incoming radiation and emit heat at a rate less than that of a black body. Highly absorptive bodies generally radiate readily while highly reflective ones radiate poorly. An example of a body whose properties are close to those of a black body is a ball covered with lamp black. The ball will receive and emit radiation at a high rate. In contract, brightly polished aluminium is a good reflector, a poor absorber, and a poor radiator.

Emissivity and Absorptivity

From our discussion in the previous section, we can draw the lesson that all real objects do not absorb or emit all the radiation that is incident upon them. Using a black body as a reference, we can determine the fraction (or ratio) of incident radiation that gets absorbed or the fraction of the absorbed radiation that gets emitted from a given body relative to the absorption or emission of radiation by a black body. We will call these ratios absorptivity and emissivity. Absorptivity, α, is the fraction of incoming radiation that is absorbed. Emissivity, ε, is the ratio of the emissive power of a real body to that of a black body at the same temperature.

We need to note that the emissivity and absorptivity of all real bodies are functions of absolute temperature and of the radiation wavelengths being absorbed or emitted.
For real bodies, ε and α can be average values over a range of wavelengths or for a specific wavelength.

Stefan-Boltzmann's Law

According to Stefan-Boltzmann, the total energy radiated per unit time per unit surface area of a black body is proportional to the fourth power of the temperature of the body expressed in Kelvin. We can use the Stefan-Boltzmann equation to calculate the total emissive power of a black body. The equation reads:

DRAFT MODULE

$$E_b = \alpha(T^4) \quad \textbf{3.12}$$

where α = Stefan-Boltzmann constant, 5.67×10^{-8} Wm^2K^4 (a numerical constant of a perfect radiator); E_b = total emissive power of black body; T = absolute temperature

From **Equation 12**, we can see that radiant heat transfer of a black body is proportional to the fourth power of the absolute temperature difference. You may recall that there are no true black bodies in life. We can, therefore, define the emissive power of a "gray" body as a fraction of the emissive power of a black body as follows:

$$E = \varepsilon E_b \quad \textbf{3.13}$$

where ε = emissivity

We can find the net heat, q_r, transferred by radiation between two bodies at temperatures T_1 and T_2, respectively, as:

$$q_r = F_E F_A A\alpha\left(T_1^4 - T_2^4\right) \quad \textbf{3.14}$$

where A = Area; α = Stefan-Boltzmann constant; F_E is a radiation factor allowing for part of the radiation being re-radiated to the body it came from; F_A is a geometric factor allowing for size, slope, and orientation of the two bodies

3.9 Unit Summary

In this unit, we have covered heat transfer and temperature measurement. These are important principles in our daily living because we encounter heat and heat transfer all the time. For example, we use solar energy to dry clothes, crops and animal feed. We also take temperature measurements in both human and livestock housing units to ensure that our living environment and that of livestock are conducive to optimal productivity. Our knowledge of heat transfer will also help us understand heat transfer

DRAFT MODULE

processes that occur in farm equipment and machinery in order for us to operate and maintain them properly.

3.10 Unit Test

3.10.1 The specific heat capacity of water vapour is 2.01 x 10^3 KJ/kg.K. How much energy must be added to raise the temperature of 1 gram of steam from 110.0°C to 120°C?

3.10.2 A liquid whose mass is 600 kg occupies a volume of 0.5 m^3 at a temperature of 20ºC. What is its specific gravity (*to 3 sig. figs*), assuming that 2,000 liters of water at the same temperature weigh 1,982 kg?

3.11 Suggested Answers to the Unit Test

Here are the suggested answers for the Unit Test:

Model Answer for Activity 2.10.1:	20.1 x 10^3 J
Model Answer for Activity 2.10.2:	1.2

DRAFT MODULE

UNIT 4: THERMODYNAMICS

4.0 Introduction

In Unit 2 and 3 you were introduced to heat and calorimetry. The concepts acquired from these two units shall be greatly applied in this unit. I want to welcome you to this unit, where we shall continue to look on the relation between heat and work and discuss various aspects of thermodynamics.

The science of thermodynamics was developed long before the atomic and molecular was accepted. It involves the description of matter in terms of macroscopic properties such as pressure, temperature, volume and heat flow. The laws of thermodynamics that

we shall discus in this unit are very important for our understanding of heat and energy flow. The first law of thermodynamics is an expression of the law of conservation of Energy. The second law of thermodynamics sets limits on the efficiency of the machines and processes that change one form of energy into another.

4.1 Objectives

By the end of this unit, you should be able to:

- Describe parts of a thermodynamic system
- Derive a characteristic gas equation
- State the first and second law of thermodynamics
- Apply the second law of thermodynamics in heat engines and refrigerators
- Calculate coefficient of performance of a refrigerator

Key terms

Ensure that you understand the key term phrases used in this unit as listed below.

- Characteristic gas equation
- Thermodynamics system
- Thermodynamics state
- Thermodynamic process
- Thermodynamic cycle
- Thermodynamic equilibrium
- Heat engine
- Phase
- Entropy
- Carnot Cycle
- Refrigerator
- Coefficient of performance

4.2 IDEAL/PERFECT GAS

This is the gas, which obeys the gas laws at all values of temperature and pressure.

Conditions of an ideal gas

1. Molecules of an ideal gas are point masses
2. There is no IMF between the molecules of an ideal gas.

4.2.1 Gas laws

BOYL'S LAW

States that, the volume of a given mass of a gas at constant is inversely proportional to its pressure.

DRAFT MODULE

Or for a given mass of a gas at constant temperature, the product of its pressure and volume is constant

PV = Constant or V α 1/P

If pressure changes from P_1 to P_2 and the corresponding volume changes from V_1 to V_2

Then $P_1V_1 = P_2V_2$

CHALRES LAW

At constant pressure, the volume of a given mass a gas increases with temperature at a nearly rate.

Vα T or V/T = Constant

PRESSURE LAW (GAY LUSSAC'S LAW)

The pressure of a given mass of a gas is directly proportional to its absolute temperature at its absolute temperature at constant volume.

PαT or P/T = Constant

$V\alpha\frac{1}{P}$ $V\alpha T$ $P\alpha T$

$P_1V_1 = P_2V_2$ COMBINED $\frac{V_1}{T_1} = \frac{V_2}{T_2}$ GAS $\frac{P_1}{T_1} = \frac{P_2}{T_2}$ EQUATION

If the amount of the gas is constant, then Boyle's, Charles' and Gay-Lussac's Laws can be combined into one relationship.

$$\frac{P_1V_1}{T_1} = \frac{P_2V_2}{T_2}$$

4.2.2 Characteristic gas equation

Consider the combined gas equation

$$\frac{P_1V_1}{T_1} = \frac{P_2V_2}{T_2}$$

$$\frac{PV}{T} = Constant$$

$$PV = Constant \times T$$

$$PV = nRT$$

We usually call the equation PV = nRT, the Characteristic gas equation. Where n is the number of moles and R is the universal gas constant (8.31J/mol/K).

Activity 1

DRAFT MODULE

An automobile tyre is filled to a gas pressure of 200 K pa at 10°C. After driving 100km, the temperature within the tire rises to 40°C. What is the pressure within the tyre now?

4.3 Thermodynamics

We define thermodynamics as the study of heat and its transformation to mechanical energy. It is a branch of Physics that deals with the relationship between heat and work. In thermodynamics we usually encounter the following terms; system, surrounding, boundary and universe.

4.3.1 Classification of thermodynamic systems

Open System: a system in which both mass and energy can cross the boundary.

Closed System: One in which mass does not cross boundaries of the system, but allows energy to pass through

Isolated System: one in which neither mass nor energy crosses the boundaries of the system.

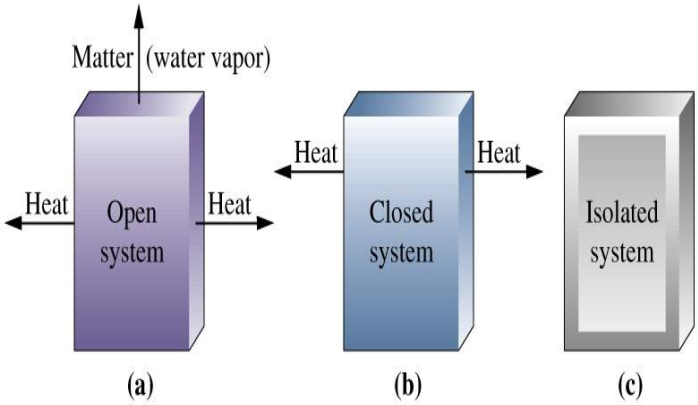

4.3.2 Thermodynamic properties

Property

It is defined as any measurable or observable characteristics of the substance when the system remains in equilibrium state. (i.e.) pressure, temp, density, volume, Energy, specific volume.

Intensive property

A property, whose value does not depend on the mass of the system is referred to as intensive property, like temperature, pressure, density, specific volume, etc. These properties are independent on the mass of the system and they are constant.

Extensive property

One whose value depends on the mass of the system, like volume, total Energy, etc.

4.3.3 Control Volume and Control Surface

Control Volume: a specified large number thermal device that has mass flow in and out of a system called as Control volume.

Control Surface: A system in which both mass and energy can cross the boundary of a control volume is called control surface

4.3.4 Categories of thermodynamic systems

Phase: A phase is a quantity of matter that is homogeneous throughout in chemical composition and physical structure.

Adiabatic system: An adiabatic system is one, which is thermally insulated from its surroundings. It can ever, exchange work with its surroundings. If it does not, it becomes an isolated system

Homogeneous system: a system which consists of a single phase (i.e.) mixture of air and water vapour, water plus nitric acid.

Heterogeneous system: a system that consists of two or more phases is called a heterogeneous system (i.e.) water plus steam, ice plus water, water plus oil.

4.3.5 A thermodynamic path and process

Any change a system undergoes from one equilibrium state to another is known as a process. We shall now define a thermodynamic path as a series of states through which a system passes during a process.

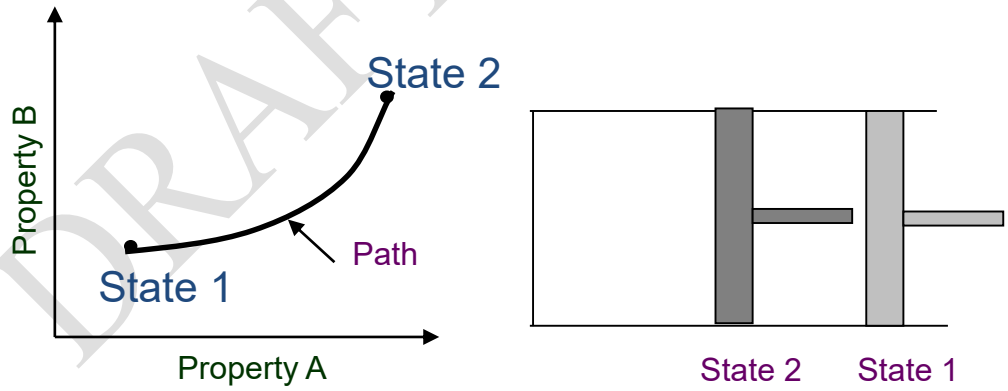

A Cycle

A system is said to have undergone a cycle if it returns to its original state at the end of the process. Thus, for a CYCLE, the initial and the final states are identical.

DRAFT MODULE

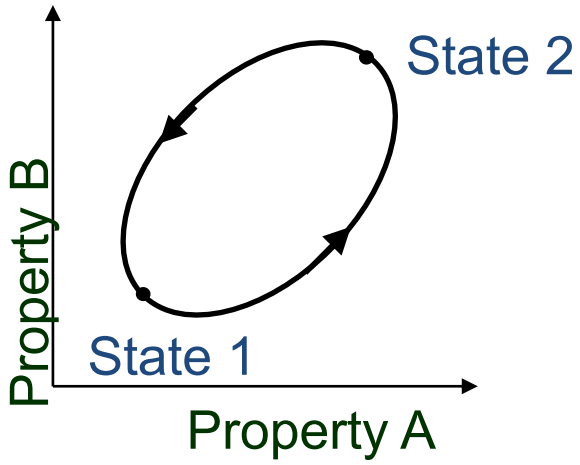

4.3.5.1 Thermodynamic Processes

Isothermal process: temperature is constant.

Isobaric process: pressure is constant

Isochoric process: volume is constant

Adiabatic process: no heat enters or leaves the system.

Isenthalpic process: enthalpy is constant

Isentropic process: entropy is constant

DRAFT MODULE

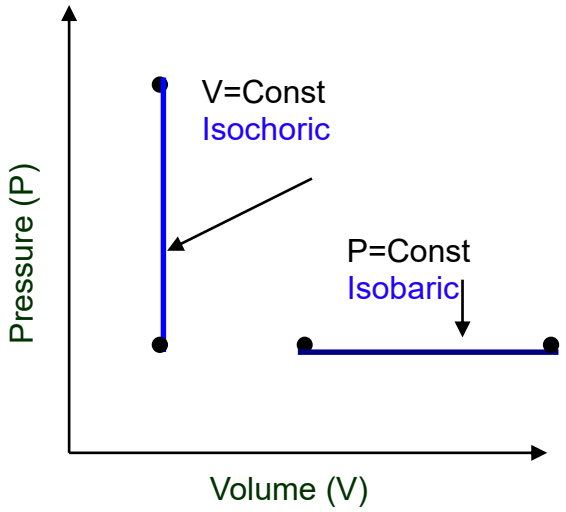

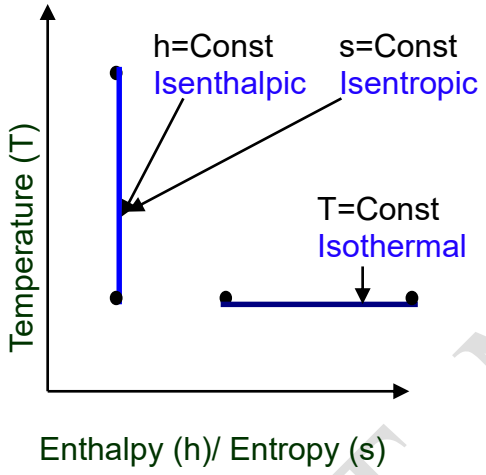

4.3.5.2 Reversible and irreversible process

Reversible process: Process that can be reversed without leaving any trace on the Surroundings. i.e. Both, System and Surroundings are returned to their initial states at the end of the Process. This is only possible when net Heat and net Work Exchange between the system and the surroundings is ZERO for the Process.

Irreversible process: Most of the Processes in nature are irreversible, i.e. Having taken place, they cannot reverse themselves spontaneously and restore the System to its original State.

4.3.6 Thermodynamic Equilibrium

Thermal Equilibrium - The temperature of the system does not change with time and has same value at all points of the system. Under thermal equilibrium, there is no transfer of heat.

DRAFT MODULE

Mechanical Equilibrium - There are no unbalanced forces within the system or between the surroundings. The pressure in the system is same at all points and does not change with respect to time.

Chemical Equilibrium - No chemical reaction takes place in the system and the chemical composition that is same throughout the system does not vary with time.

Phase equilibrium – Occurs to a system having more than one phase. Mass of each phase is in equilibrium

Activity 2

Explain the relationship between an isobaric process and mechanical equilibrium.

4.4 Zeroth law of Thermodynamics

We have seen in section 4.3.6 that in thermal equilibrium there is no heat transfer between or among the substances in contact. In Zeroth law we are simply applying the principal of heat transfer under thermal equilibrium.

Zeroth law states that, "***If two bodies are in Thermal Equilibrium with the third body, then they are also in Thermal Equilibrium with each other.***"

For instance, if A is in thermal equilibrium with B, and B is in thermal equilibrium with C, then A and C are in thermal equilibrium with each. Zeroth law serves as a basis of validity for temperature measurement in science.

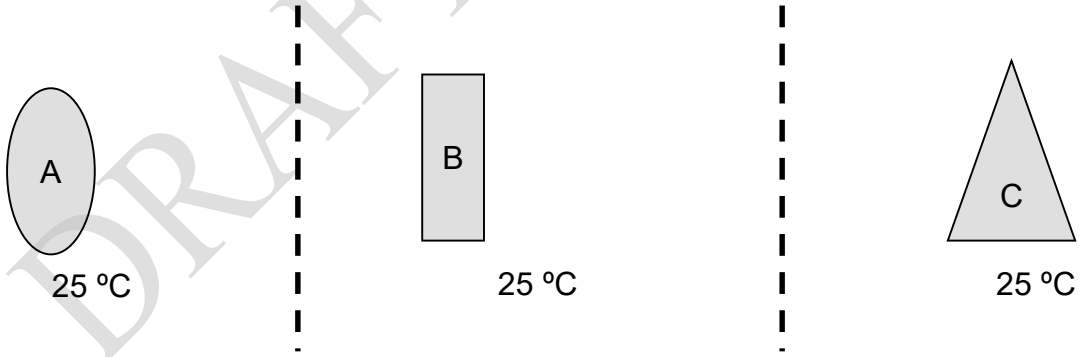

4.5 First law of thermodynamics

You may recall from unit 5 in Physics module 1, that we discussed the law of conservation of energy. The first law of thermodynamics is the application of the law of conservation of energy to thermal systems. The law states that:

"Whenever heat is added to a system, it transforms to an equal amount of some other forms of energy."

DRAFT MODULE

We may alternatively define the first law as

"The change in internal energy of a system is equal to heat added to the system minus the work done by system."

$$\Delta U = Q - W \qquad 4.1$$

You may deduce from this law that whenever you add heat to a system, it will be turned into internal energy of the system or it will do some work.

In order to avoid confusion of signs when dealing with the first law of thermodynamics we are going to summarize all sign conversion in a table.

VARIABLES	**SIGNS**
Work done by the system	Negative [- ve]
Work done on the system	Positive [+ ve]
Heat released by the system	Negative [+ ve]
Heat added to the system	Positive [+ ve]
Increase in internal energy	Positive [+ ve]
Decrease in internal energy	Negative [- ve]

Example

If 60J of work is done on a gas and the gas loses 150J of heat to its surroundings. What is the change in internal energy?

Solution:

60J of work is done on the system, and then work done is positive (+W)

W = 60J

150J of heat is released by the system, and then heat in the system is negative (- Q), Q = - 150J

$$\Delta U = -Q + W$$

$$\Delta U = -150 + 60J = -90J$$

Application of the first law of thermodynamics

We want to apply the first law of thermodynamics to some simple processes.

Limitations of the first law of thermodynamics

1. It does not indicate the direction of transfer of heat

Does not explain why heat cannot flow from cold to hot

2. It does not tell anything about the conditions under which heat can be converted into work

DRAFT MODULE

3. It does not tell why the whole of heat energy cannot be converted into mechanical work continuously.

Activity 3

A gas starts with 400J of internal energy. When 360J of heat is added to the gas, the gas does 140J of work. What is the final internal energy?

4.6 Second law of thermodynamics

Having discovered shortfalls in the first law of thermodynamics, scientists came up with a more clear explanation on heat transfer. The second law of thermodynamics stipulates that, ***"Heat flows naturally from a hot body to a cold body; heat will never of itself flow from a cold body to a hot body."***

Or ***"When work is done by a heat engine, running between two temperatures, T_H (Hot) and T_L (cold), only some of the input energy at T_H can be converted to work otherwise the rest is rejected as heat at T_L."***

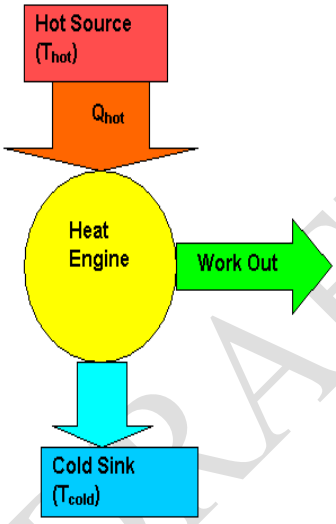

4.6.1 Kelvin-Plank and Clausius statements

a) Kelvin-Planck Statement

"It is impossible to construct a system which when operating in a cycle will extract heat energy from a single source and do an equal amount of work on the surroundings".Ie never possible to achieve 100% thermal efficiency

b) Clausius Statement

"It is impossible to construct a device which when operating in a cycle has no other effect than the transfer of heat energy from a cool to a hotter body".Ie some work is done on or by the working fluid to the surroundings or vice versa.

DRAFT MODULE

4.4.2 Entropy

May be defined in the following ways:

We may define entropy in a number of ways: *It is the measure of the disorderliness of a system.* Alternatively

Entropy is the measure of the amount of energy, which is unavailable to do work.

Is a state variable whose change whose change is defined for a reverse process at T where Q is heat absorbed

Entropy (S) = Heat absorbed (Q) / Temperature (T)

The 2nd Law of Thermodynamics says that during any process:

$$\Delta S_{universe} = \Delta S_{system} + \Delta S_{surroundings} \geq 0 \qquad 4.2$$

Change in entropy

When a system goes from state one to state two, its entropy changes by the same amount ΔS, whether a hypothetical reversible path is followed or a real irreversible path is taken.

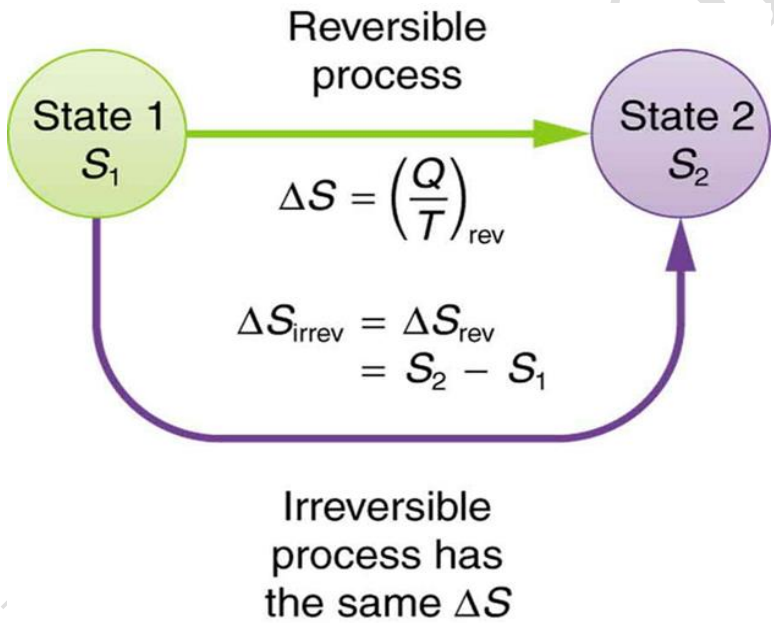

4.4.3 HEAT ENGINES

A heat engine is a device that converts heat into mechanical work

Characteristics of Heat Engines:

1.They receive the Heat from High-Temp Reservoir (i.e. Source)

2.They convert part of this Heat to Work

3.They reject the remaining Heat to Low-Temp Reservoir (i.e. Sink)

They operate on a <u>CYCLE</u>.

Heat Engines are generally Work – Producing devices,

e.g. Gas Turbines, I.C. Engines, Steam Power Plants, etc.

HEAT ENGINE :

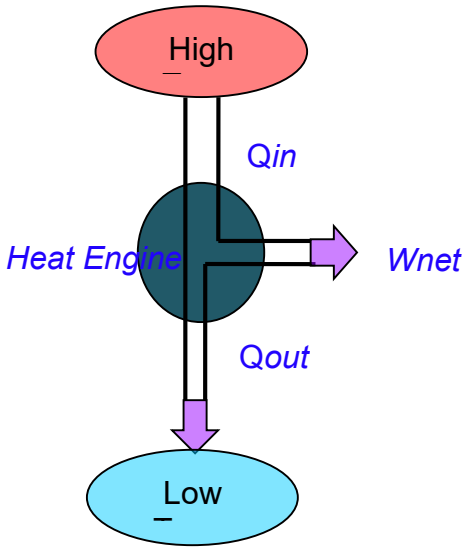

$$Q_H = Q_L + W \quad 4.3$$

$$W = Q_H - Q_L \quad 4.4$$

Efficiency of a heat engine

Is the ratio of the work done (W) to the input Heat (Q_{in}) at higher temperature

$$\eta = \frac{W_{net}}{Q_{in}} \quad 4.5$$

$$\eta = \frac{Q_{in} - Q_{out}}{Q_{in}} \quad 4.6$$

$$\eta = 1 - \frac{Q_{in}}{Q_{out}} \quad 4.7$$

A Carnot cycle consist of two reversible adiabatic and two isothermal processes operating between temperature T_H and T_C

DRAFT MODULE

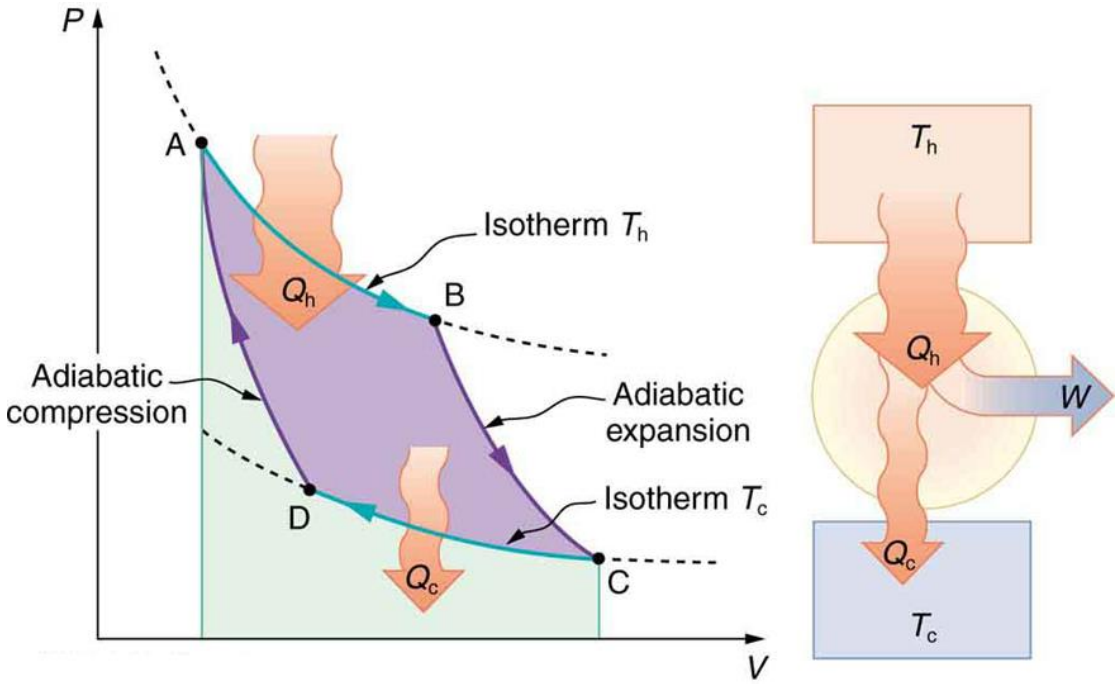

4.4.4 CARNOT CYCLE

The very best theoretically possible heat engine is the Carnot engine. The efficiency of a Carnot engine depends on the temperature of the hot and cold reservoirs.

$$e_{Carnot} = 1 - \frac{T_{cold}}{T_{hot}}$$

Note : The temperatu res must be measured in Kelvins!!!

Consider the following two equations for efficiency of Carnot engine

$$e_{carnot} = 1 - \frac{Q_{cold}}{Q_{hot}} \qquad 4.8$$

$$e_{carnot} = 1 - \frac{T_{cold}}{T_{hot}} \qquad 4.9$$

Equating equations 4.8 and 4.9 we have

$$e_{carnot} = 1 - \frac{Q_{cold}}{Q_{hot}} = 1 - \frac{T_{cold}}{T_{hot}}$$

$$\frac{Q_{cold}}{Q_{hot}} = \frac{T_{cold}}{T_{hot}} \qquad 4.10$$

DRAFT MOD

Example

A carnot engine absorbs 1000J of heat from a reservoir at 127°C and rejects 600J during each cycle. Calculate

a. Efficiency of the engine
b. The temperature of the sink
c. The amount of useful work done in each cyle

Solution:

Lets first identify what we have from the given information;

Q_H = 1000J, Q_C = 600J, T_H = 127°C.

Since all temperatures must be in Kelvin, we have to convert 127°C to Kelvin

T_H = 127 + 273 = 400K

a. Efficiency of the engine

Since we have Q_H and Q_C, we are going to apply equation number 4.7:

$$\eta = 1 - \frac{Q_H}{Q_L}$$

$$\eta = 1 - \frac{600}{1000} = 1 - 0.6$$

η = 0.4 or 40%

b. Temperature of the sink T_L

Here we are going to use equation 4.10

$$\frac{Q_H}{Q_L} = \frac{T_H}{T_L}$$

$$T_L = \frac{Q_L}{Q_H} \times T_H$$

$$T_L = \frac{600}{1000} \times 400 = 240K \text{ or } -33°C$$

c. Useful work

We will use equation 4.4

$W = Q_H - Q_L$

W = 1000J – 600J = 400J

DRAFT MODULE

Types of Engines

External combustion Engine: the one in which the working substance is produced by burning the fuel outside the cylinder, E.g. steam engine

Internal combustion engine: fuel is burned inside the cylinder e.g. petrol engine

Activity 4

1. A glass rod is heated and then blown by a glassblower. When it is at 185°C it is brought outside to cool. 3200 J of heat are transferred from the glass to the air, which is at 18°C. Find the change in entropy of the universe.
2. A Carnot absorbs 1000J of heat from a reservoir at 127°C and rejects 600J of heat during each cycle. Calculate
   a. The efficiency of the engine
   b. The temperature of the sink
   c. The amount of useful work done during each cycle

4.5 REFRIGERATOR

A refrigerator is a heat engine running in reverse

It transfers heat from a colder body (sink) to a hotter body (source).

This is achieved by doing work on the refrigerator

DRAFT MODULE

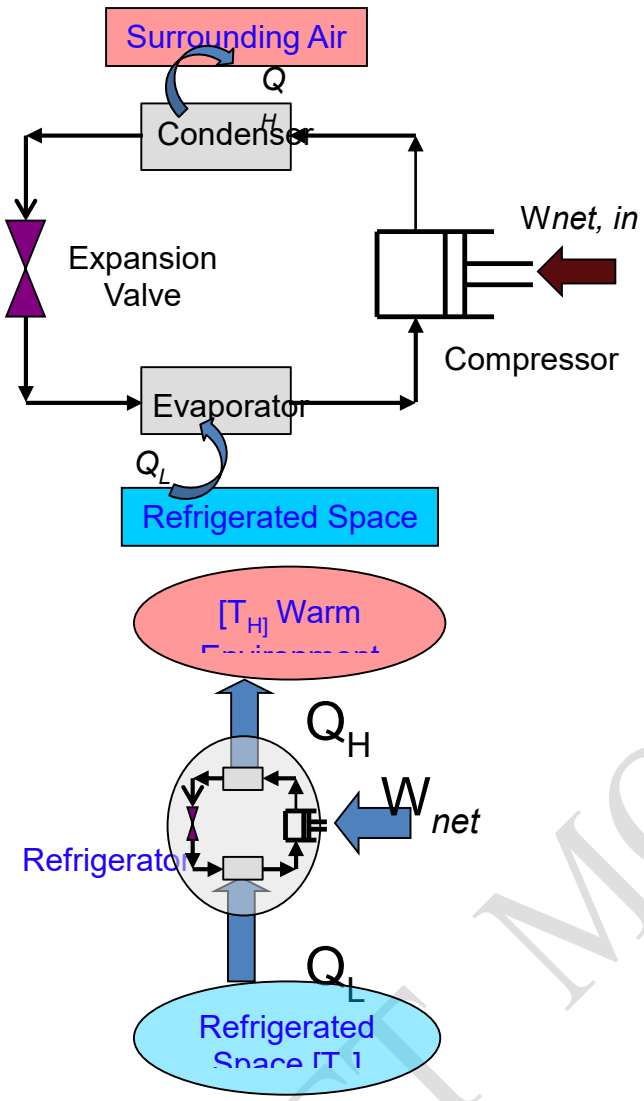

4.5.1 Coefficient of Performance (COP)

Performance of a refrigerator is measured by its coefficient of performance. Coefficient of Performance of a refrigerator is the ratio of heat extracted per cycle at low temperature to the work input required.

$$COP = \frac{Q_L}{W} \qquad 4.11$$

But we saw in equation 4.4 that: $W = Q_L - Q_L$ if make we substitute for W in equation 4.11, we get

$$COP = \frac{Q_L}{Q_H - Q_L} \qquad 4.12$$

Sometimes we calculate coefficient of performance of a refrigerator, using sink and source temperatures. In this case quantities in equation 4.12 are represented in terms of

DRAFT MODULE

their corresponding temperatures, thus T_L for Q_L and T_H for Q_H as shown in equation 4.13.

$$COP = \frac{T_L}{T_H - T_L} \qquad 4.13$$

Example

A farm shop refrigerator has a coefficient of performance of 6. If the room temperature outside the refrigerator is 30°C, what is the lowest temperature that can be obtained inside the refrigerator.

Solution

The easier way to solve this problem is to know the right equation to be used by first identifying given terms and missing terms. In our case we are given COP = 6 and temperature outside the refrigerator T_H. We have been asked to calculate (are missing) the temperature inside the refrigerator T_L.

In this case we are going to apply equation 4.13,

$$COP = \frac{T_L}{T_H - T_L}$$

$$6 = \frac{T_L}{303K - T_L}$$

$1818K - 6T_L = T_L$

$7T_L = 1818K$

$T_L = 260K$.

Activity 5

A household refrigerator has a coefficient of performance of 6.0. If the room temperature outside the refrigerator is 30°C, what is the lowest temperature that can be obtained inside the refrigerator?

4.6 Practice Activity

An Agricultural Economist wants to buy a very effective refrigerator for Bunda farm shop. On the market there are two models of refrigerators. Model A works between -10°C and 27°C while model B works between -27°C and 17°C. Both A and B can remove 2000J of heat from the freezer. Which refrigerator should she buy and why? (Show your working)

DRAFT MODULE

4.7 Unit summary

In this unit we have discussed important concepts in the transformation of heat to mechanical energy. Pressure, temperature, volume, enthalpy and entropy are parameters that are involved in the transformation of heat. This transformation follows a particular thermodynamic process which takes a specific path.

Unit Test

1. In a refrigerator, heat from inside at 277K is transferred to a room at 300K. How many joules of heat shall be delivered to the room for each joule for each joule of electrical energy consumed ideally?

2. What amount of work has to be done in converting 1kg of water into steam at 100°C and normal atmospheric pressure? [The volume of 1 kg of water at 100°C is 10^{-3} m^3 and that of 1 kg of steam is 1.671m and the normal pressure is 10^5 Nm^{-2}.

3. Calculate the change in internal energy of a block of copper of mass 200g when it is heated from 25°C to 75°C. Assume the change in volume is negligible. Specific heat of copper is 0.1/g/K

4. 1.0 m^3 of water is converted into 1671 m^3 of steam at atmospheric and 100°C temperature. The latent heat of vaporization of water is 2.3×10^6 J/kg. If 2.0 kg of water is converted into steam at atmospheric pressure and 100°C temperature, then how much will be the increase in its internal energy? [Density of water = 1×10^3 kg m^{-3} and atmospheric pressure = 1.01×10^5 Nm^{-2}].

5. What amount of heat must be supplied to 2×10^{-2} kg of nitrogen (at room temperature) to raise its temperature by 45°C at constant pressure (molecular mass of N_2 = 28; R=8.3J/mol/K; C_P = 3.5R)

6. Let temperatures T_1 and T_2 of the two heat reservoirs in the ideal Carnot engine be 1500°C and 500°C respectively. Which of these, increasing T_1 by 100°C or decreasing T_2 by 100°C, would result in a greater improvement in the efficiency of the engine?

DRAFT MODULE

7. Calculate the efficiency of the Carnot engine working between the steam point and ice point.

8. A Carnot engine whose low temperature reservoir is at 7°C, has an efficiency of 50%. It is desired to increase the efficiency to 70%. By how many degrees, the temperature of the high-temperature reservoir is increased?

Suggested Answers to Unit Activities

Activity 1

232 Pa.

Activity 2

They both occur at constant pressure

Activity 3

620 J.

Activity 4

1. 4J/K
2. a.) 40% b.) 240K c.) 400J

Activity 5

260 K

Practice Activity

She should buy refrigerator A. Refrigerator A has a high coefficient of performance than refrigerator B, hence more effective.

Unit Test

1. 13J
2. 1.670×10^5J
3. 4200J
4. 4.263×10^6 J
5. 934 J
6. Decreasing the temperature by 100°C
7. 26.81%
8. 373.3K

DRAFT MODULE

DRAFT MODULE

UNIT 5: ELECTRICITY AND MAGNETISM

5.0 Introduction

Before the fifteenth century, man used other sources energy for lighting, cooking and even production. There was little Electrical phenomena have been studied since antiquity; though progress in theoretical understanding remained slow until the seventeenth and eighteenth centuries. Even then, practical applications for electricity were few, and it would not be until the late nineteenth century that engineers were able to put it to industrial and residential use. The rapid expansion in electrical technology at this time transformed industry and society. Electricity's extraordinary versatility means it can be put to an almost limitless set of applications which

include transport, heating, lighting, communications, agriculture and computation. Electrical power is now the backbone of modern industrial society.

5.1 Objectives

By the end of this unit, you should be able to:

- Describe the structure of an atom in relation to static and current electricity
- Differentiate static electricity from current electricity
- Design parallel and series circuits
- Apply Kirchhoff's rules in circuit analysis
- Explain the applications of Faraday's law

Key terms

Ensure that you understand the key term phrases used in this unit as listed below:

- Charge
- Circuit
- Kirchhoff's rules
- Lenz law
- Ohms law
- Magnetic flux
- Faraday's law
- Transformers
- Magnetic field
- Electric Field

5.2 Atomic Structure

As you have learnt from secondary school physical science, an atom is made up of neutrons, protons and electrons. Electrons are found in the outer most shells and have a negative charge and a negligible mass. Protons and neutrons are found at the center of an atom. Protons are positively charged and have a unit mass. Neutrons have a zero charge and a unit mass. Figure 5.1 is shows a structure of an atom.

DRAFT MODULE

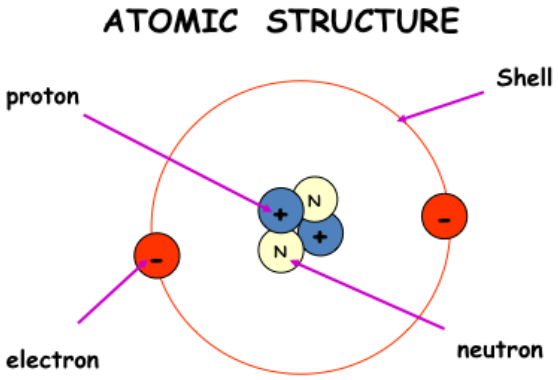

Figure 5.1: Atomic Structure

Activity 1

Explain how does the position of electrons and protons in an atom affect their movement when conducting current.

5.3 Electric Charge and Fields

In most cases you wonder when you see sparks or hear a sparkling sound when putting off nylon clothes. In this case, the sparks are the result of transfer of electric charges.

5.3.1 Electric Charge

We shall define electric charge as the intrinsic characteristic of the fundamental particles making up insulators. Electricity in insulators is transferred through negative charge carriers (electrons) and positive charge carriers (protons). An insulator that increases the number of charges by getting extra positive charges becomes positively charged. On the contrary, an insulator that has a deficit of positive charges (has more electrons that protons) is considered as negatively charged.

The SI Unit for electric charge is a Coulomb (C). Q or q represents electric charge.

5.3.2 Electric Field

When you rub your pen against your hair and bring it close to a heap of small small pieces of papers, a pen attracts pieces of paper; hence they jump to the pen. But the

DRAFT MODULE

attraction forces excreted on the pieces of paper by the pen depend on pen's distance from the pieces of papers. This illustrates to us that it is only within a certain distance that pieces of papers will jump to the pen. The area around an electric charge where electrostatic forces are experienced is referred to as an electric field.

We represent the intensity of an electrostatic field at any point as force per unit charge. Mathematically is given as in equation 5.1

$$E = \frac{F}{Q} \qquad 5.1$$

The SI Unit for electric field intensity is Newton per coulomb or volts per meter; N/C or V/m.

Example 1

Find the magnitude of the force acting on a 2.5 C charge, placed in an electric field with an intensity of 10N/C.

Solution:

Here we have Q = 2.5C, E = 10N/C and F =?

To work out F we have to make F subject of the formula in equation 5.1

Then F = EQ = 2.5 C x 10N/C = 25N.

Activity 2

Calculate the value of the magnetic field intensity, given that a force of 0.02N is being exerted on a 10μC charge

5.4 Coulomb's Law

Coulomb's law is sometimes defined as the inverse square law. It describes the relationship between the force of attraction between two or more charges and the distance between them. We state coulomb's law as:

"The electrostatic force (F) between two point charges (q_1) and (q_2) is directly proportional to the product of the two charges and inversely proportional to the square of the distance (r) between their centres."

We can express Coulomb's law mathematically as shown in equation 5.2

$$F \alpha \frac{q_1 \times q_2}{r^2}$$

$$F = \frac{K|q_1| \times |q_2|}{r^2} \qquad 5.2$$

DRAFT MODULE

Example 2

Calculate the value of two equal changes if they repel each other with a force of 0.1 N when situated at 50 cm apart in vacuum.

Solution:

To successfully solve this problem we have to first identify what we have:

F = 0.1N; r = 50 cm; k = 9 x 10 ^{9} $C^2/N/m^2$; $q_1 = q_2$ =?

Lets convert 50cm to meters, which is 50/100 = 0.5 m

Now we are going to apply equation 5.2

$$F = \frac{k|q_1||q_2|}{r^2}$$

let us now substitute the given values

$$0.1 = \frac{9\times10^9\times q_1\times q_2}{0.5^2}$$

But we are told in the question that $q_1 = q_2$ and we can equate this to q, then

$q_1 = q_2 = q$, then $q_1\times q_2 = q\times q = q^2$

$$0.1 = \frac{9\times10^9\times q^2}{0.5^2}$$

Making q the subject of the formula, we have:

$$q^2 = \frac{0.1\times0.5^2}{9\times10^9}$$

$$q = \sqrt{\frac{0.1\times0.5^2}{9\times10^9}} = 1.7\times10^{-6}C \text{ or } 1.7\mu C$$

Activity 3

A helium nucleus has charge $+2e$, and a neon nucleus $+10e$, where e is the quantum of charge, 1.60×10^{-19} C. Find the repulsive force exerted on one by the other when they are 3.0 nanometers (1 nm = 10^{-9} m) apart. Assume the system to be in vacuum.

5. 5 Resistivity and Conductivity

Resistivity

Resistivity is the measure of how strong a conductor resist the flow of electric current. The SI unit of resistivity is ohm-meter (Ωm). Equation 5.3 shows an equation for resistivity:

DRAFT MODULE

$$\rho = \frac{RA}{l} \qquad 5.3$$

Where, R is resistance of the conductor

A is the cross-sectional area of the conductor

l is the length of the conductor and

ρ is the resistivity of a conductor

Conductivity

Conductivity is the inverse (opposite) of resistivity. We may define conductivity as the measure of how well a metal allows the flow of current. Conductivity is measured in $\Omega^{-1}m^{-1}$.

In this case we may deduce that the higher the resistivity of a conductor the lower the conductivity. Mathematically is represented as shown in equation 5.4.

$$\delta = \frac{1}{\rho}$$

$$\delta = \frac{l}{RA} \qquad 5.4$$

Activity 4

A metal rod is 2m in long and 8mm in diameter. Compute its resistance if the resistivity of the metal is 1.76 x 10^{-8} Ωm.

5.6 Electric Current

Each time we hear the term electric current; our mind begins to visualize a number of electrical appliances (bulbs, electric iron, a kettle, a cooker, radio cassettes, etc.) that we have ever handled in our lives. You may recall from your secondary school physical science that electrons in insulators localized (stationary) and hence cannot produce electric current but rather static electricity. On the contrary, electrons in metals are delocalized (move randomly). When a cell is connected to a conductor the free moving electrons in a wire align themselves and flow uniformly in one specified direction. The uniform flow of electric current is known as electric current.

You may also express electric current as the rate of change of electric charge. Electric current is measured in Coulomb per second (Coulomb/s) or Amperes (A). Relation 5.5 shows an equation for electric current.

DRAFT MODULE

$$I = \frac{Q}{t} \qquad 5.5$$

5.6.1 Ohms Law

Ohms law describes the relationship among current, voltage and resistance in a circuit. Ohms law may be stated in a variety of ways but all meaning the same thing. In this section we shall define Ohms law as:

"The potential difference across a conductor is directly proportional to the current passing through the conductor."

Or, "*Voltage is equal to the product of resistance and current.*"

$$V = IR \qquad 5.6$$

5.6.2 Ohms Law and Resistance

Resistance is the opposition to the flow of electric current and is measured in Ohms. The behavior of current, voltage and resistance in circuit depends on the arrangement of each circuit. We can arrange our circuit as a parallel circuit or a series circuit.

5.6.3 Series Circuit

When you connect three resistors connected as shown in figure 5.2, the following facts follow:

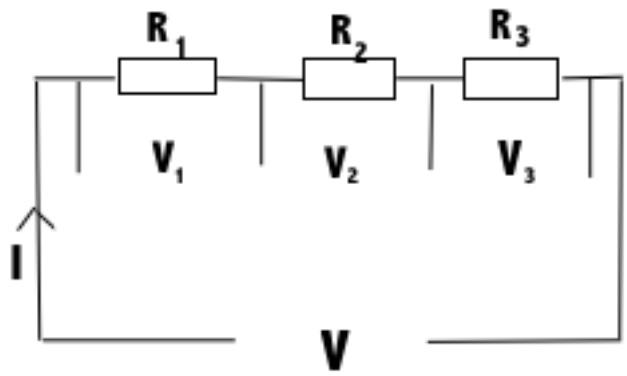

FIGURE 5.2

Facts on Series Resistors

1. Current is the same through all resistors
2. Total voltage (PD) = sum of individual voltages (pds): $V = V_1 + V_2 + V_3$
3. Individual potential difference (voltage) is directly proportional to individual resistances $V_1 = IR_1$, $V_2 = IR_2$, $V_3 = IR_3$
4. Total resistance is greater than individual resistance. $R = V/I = R_1 + R_2 + R_3$
5. Total resistance = sum of individual resistances

5.6.4 Parallel Circuit

Facts on Parallel Resistors

1. Potential difference (voltage) is the same across each resistor.

$V = V_1 = V_2 = V_3$ or $V = I_1R_1 = I_2R_2 = I_3R_3$

2. Total current = sum of individual currents
   i. $I = I_1 + I_2 + I_3 +$
3. Individual currents inversely proportional to individual resistances
4. Effective resistance less than least individual resistance
   i. $I/V = 1/R = 1/R_1 + 1/R_2 + 1/R_3$

Example

A farmer designed a simple circuit for his chicken kraal. The arrangement of resistors in his circuit is shown in figure 5.6. If R1 = 3Ω, R2 = 9Ω, R3 = 12Ω and R4 = 6Ω. Find the value of current passing through R1.

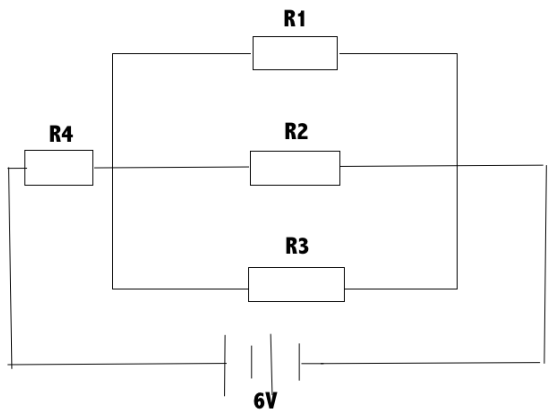

Solution:

We first of all should find the effective resistance of the parallel arrangement,

Effective resistance:

$1/R_T = 1/3+1/9+1/12$

$= (12+4+3)/36$

$= 19/36$

$R_T = 36/19 = 1.9\Omega$

Then we will consider series resistors: 1.9 Ω

$R_{net} = 1.9+6 = 7.9\ \Omega$

Total current will be given by

$I = V/R$

$= 6/7.9$

$= 0.76A$

But we know that voltage in series is divided, then 6V will shared between a R4 resistor and the set of 3 parallel resistors. In this case let us find the voltage across a 3Ω resistor.

$V_{R4} = IR = 0.76A \times 6\Omega = 4.56V$

Then voltage across a set of parallel resistors will simply be the difference between circuit voltage (6V) and voltage across R4.

$V_{\text{Across a set of parallel resistors}} = 6V - 4.56V = 1.44V$

At this point we know that voltage across parallel resistors is the same, thus R1, R2 and R3 are all 1.44V.

Finally, it will be easier to calculate the value of current passing through R1, since we know the values of voltage (1.44V) and resistance (3Ω).

$$I_{R1} = \frac{V_{R1}}{R1} = \frac{1.44V}{3\Omega} = 0.48A$$

5.6.5 Electrical Power

You may recall that electrical power is the product of voltage and current. We usually use Ohms law to derive at other equations of power. The SI unit for power is Watt (W)

$P = VI$

$P = I^2R$

$P = V^2/R$

5.7 Potential Difference and Internal Resistance

The potential difference is the work done in moving a unit charge from one point to another. In every cell there is some resistance

DRAFT MODULE

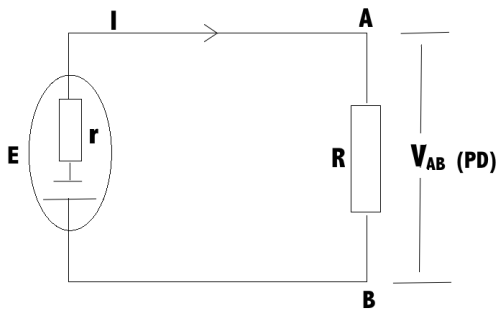

W = QV = ItV

To calculate power generated by the source:

$EI = I^2r + I^2R$

Dividing both sides by I

E = Ir + IR

E = I (r + R)

Making I subject

I = E/(R+r)

PD across AB: V_{AB} = E – Ir = IR

Then V_{AB} = IR = [E/(R+r)] R

5.7.1 Potential Divider Rule

In order to find the voltage of a single resistor amongst several resistors connected in parallel, we apply potential divider rule.

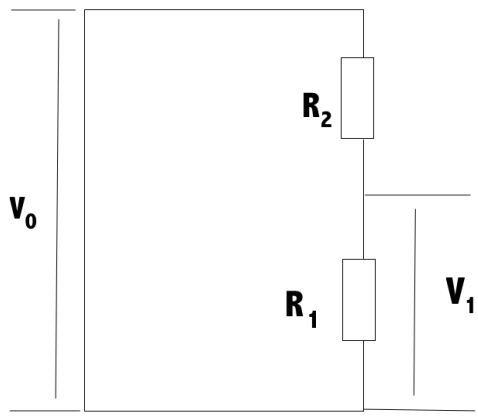

$I = V_0/R = V_0/ (R_1+R_2)$……. 1

$V_1 = IR_1$ 2

Sub. Eqn 1 into 2

NFT MODULE

$V_1 = R_1V_0/(R_1+R_2)$

5.8 Kirchhoff's Rules

5.8.1 KIRCHOFF'S JUNCTION RULE

It's also known as Kirchhoff's current rule

States that, ***"the sum of the currents entering any junction must be equal to the sum of currents leaving the junction."***

Alternatively can be defined as, ***the algebraic (net) sum of the currents at a junction is zero***

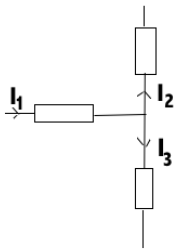

$I_1 = I_2 + I_3$ or $\Sigma I = 0$.

Its applied in case where we have more than one loop

Junction rule is based on the conservation of charge

FACTS ON KCL

1. If the direction of the loop is in the same direction of the current, current is positive
2. If the direction of the loop is in the opposite direction to current, current is negative
3. The direction of the loop should be the same in every loop

5.8.2 KIRCHHOFF'S VOLTAGE RULE

States that, the algebraic sum of voltages around a closed circuit loop is zero.

$\Sigma V = 0$

FACTS ON KVL

1. If the direction of the loop moves from positive to negative side o0f a cell, V is negative
2. If the direction of the loop moves from positive to negative side of the loop
3. The direction of the loop should be same in every loop

Activity 5

Find the value of I_1, I_2 and I_3 in figure 5.8

DRAFT MODULE

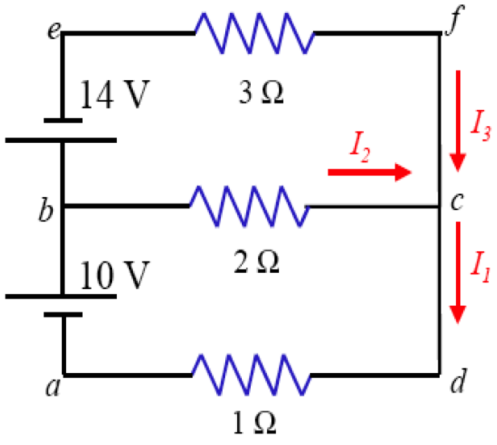

5.9 Electric and magnetic Fields

5.9.1 Magnetic Fields

A region where magnetic forces are experienced

$B = F_B / qv$

$F_B = B|q|v$

If we have an angle between φ B and V then

$F_B = B \times |q| \times v \times \sin \varphi$

Where B = Magnetic field

F_B = Magnetic force

q = Charge

V = velocity

SI unit of B is Tesla (T)

5.9.2 Magnetic Properties of Matter

Diamagnetic substances: substances in which the magnetic moment is weak and opposite the applied magnetic field.

Paramagnetic substances: substances in which the magnetic moment is weak and in the same direction as the applied magnetic field.

Ferromagnetic substances: interaction between atoms cause magnetic moments to align and create a strong magnetization that remains after the external field is removed.

5.9.3 Electromagnetism

DRAFT MODULE

Magnetic forces created due to the flow of current in a conductor. The magnetic force is affected by the magnitude of current and the number of turns in a coil.

Magnetic Field Pattern Round a Flat Coil

A solenoid is obtained by increasing the number of turns of a flat coil. The resulting magnetic field pattern of a solenoid resembles that of a bar magnet.

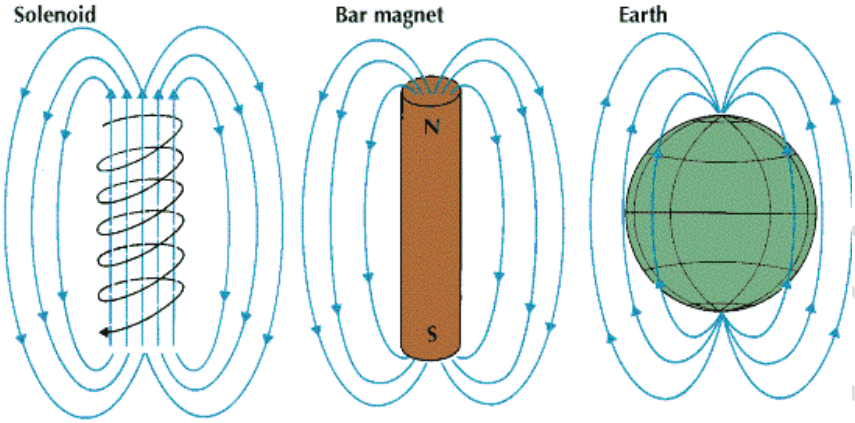

Magnetic field pattern around a straight wire

The resulting magnetic field lines form concentric circles around the wire.

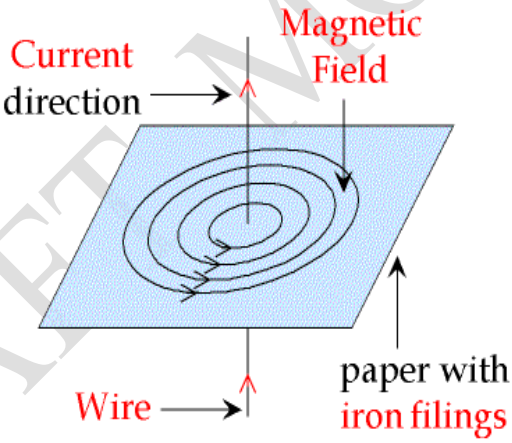

The Right-Hand Grip rule can be used to predict the direction of the magnetic field.

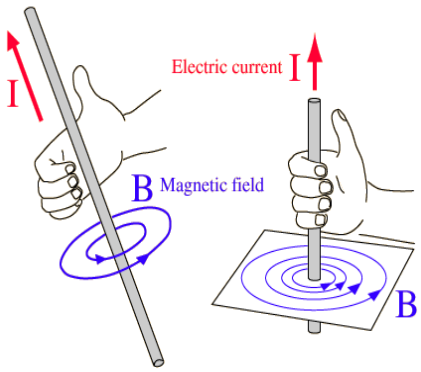

5.9.4 Magnetic Flux and Faraday's Law of Induction

DRAFT MODULE

5.9.4.1 Induced Electromotive Force

Faraday's experiment: closing the switch in the primary circuit induces a current in the secondary circuit, but only while the current in the primary circuit is changing.

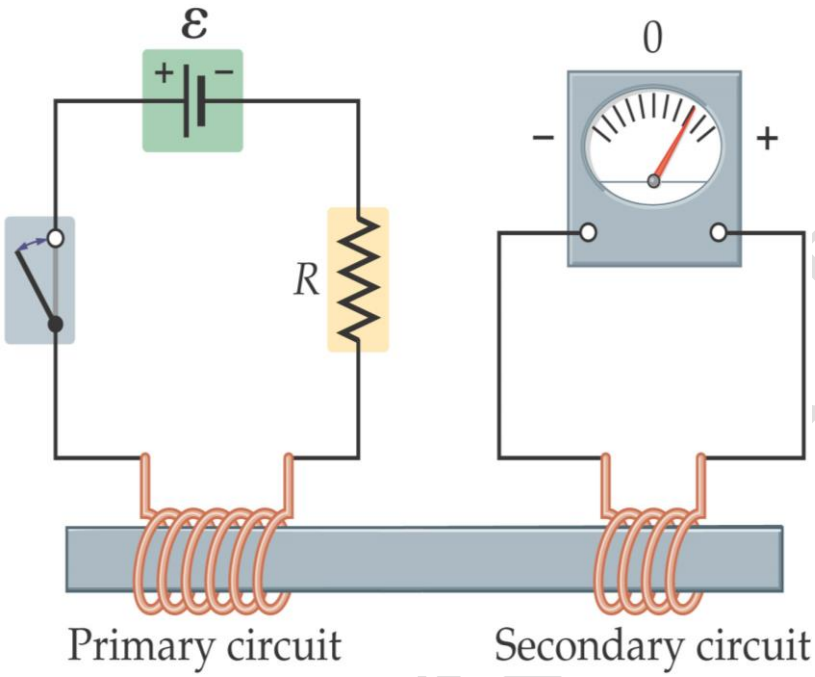

The current in the secondary circuit is zero as long as the current in the primary circuit, and therefore the magnetic field in the iron bar, is not changing.

Current flows in the secondary circuit while the current in the primary is changing. It flows in opposite directions depending on whether the magnetic field is increasing or decreasing.

The magnitude of the induced current is proportional to the rate at which the magnetic field is changing.

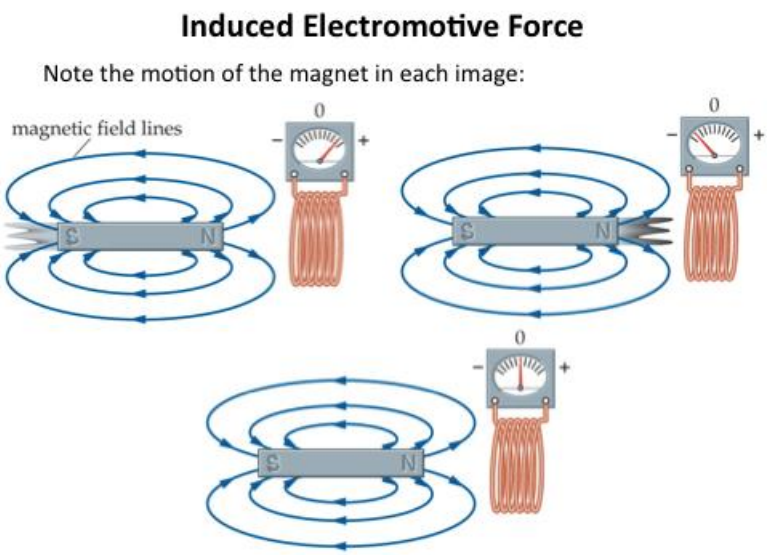

DRAFT MODULE

5.9.4.2 Magnetic Flux (Φ)

$\Phi = ABCos\ \theta$

The SI unit is $1T.m^2$ or Weber (Wb)

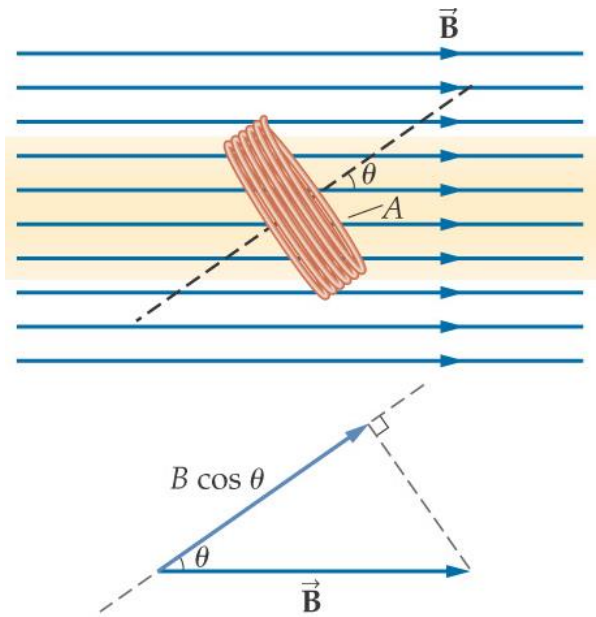

Magnetic flux is used in the calculation of the induced emf.

Faraday's law of Induction

Faraday's law: An electromotive force (E) is induced only when the magnetic flux (Φ) through a loop changes with time (t).

$$\varepsilon = -N\frac{\Phi_{final} - \Phi_{initial}}{t_{final} - t_{initial}}$$ which can be presented as

$$\varepsilon = -N\frac{\Delta\Phi}{\Delta t}$$

5.9.4.3 Lenz law

Lenz law is a law that is applied in generating electromotive force. It relates the direction of current and the magnetic flux that causes it. Lenz law states that,

"An induced current always flows in a direction that opposes the change that caused it."

DRAFT NOTE

For instance, if we have a bar magnet and a conductor carrying current as shown in figure 5.7, When the magnetic field is increasing, the magnetic field created by the induced current will be in the opposite direction; if decreasing, it will be in the same direction.

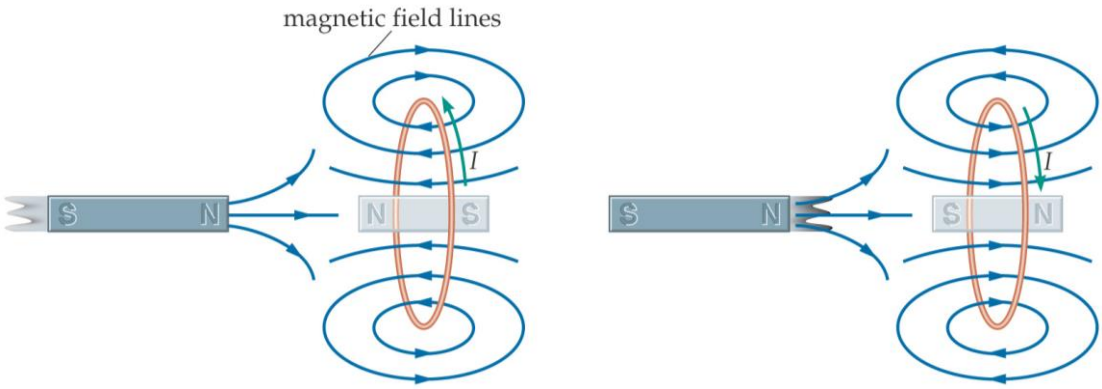

5.9.4.4 Electric and Magnetic Fields

There is a direct relationship between magnetic field (B) and an electric field (E). We now want to consider equations of electric and magnetic fields and establish their relationship.

Electric Force: $F_e = qE$

Magnetic Force: $F_B = qvB$

At equilibrium in a conductor having both E and B fields: $F_e = F_B$

Thus $qE = qvB$

Making q subject:

$E = Bv$

5.10 Generators and Motors

5.10.1 Generators

An electric generator converts mechanical energy into electric energy. An outside source of energy is used to turn the coil, thereby generating electricity.

DRAFT MODU

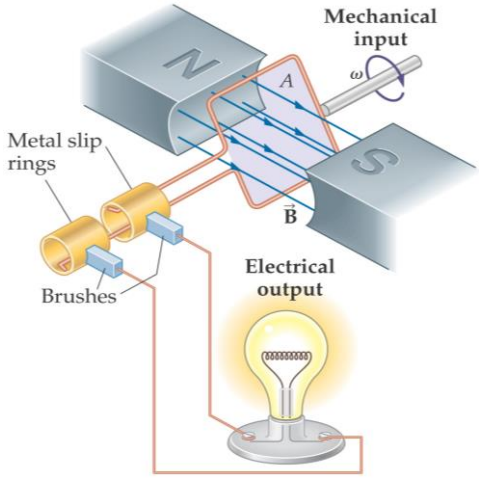

5.10.2 Electric Motors

An electric motor is exactly the opposite of a generator – it uses the torque on a current loop to create mechanical energy.

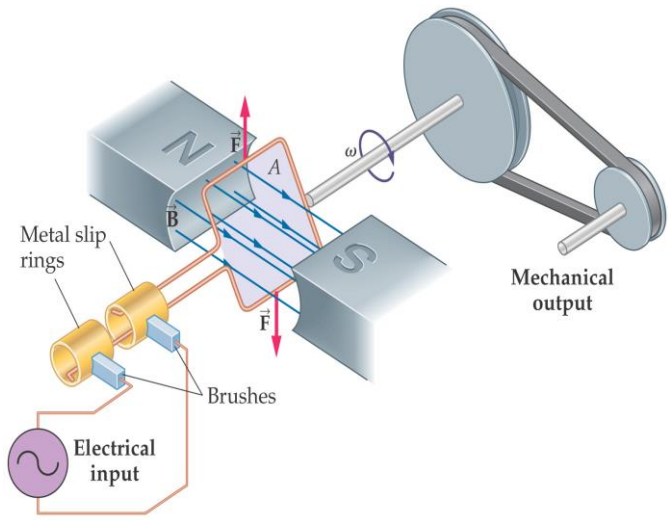

5.11 Transformers

A transformer is used to change voltage in an alternating current from one value to another.

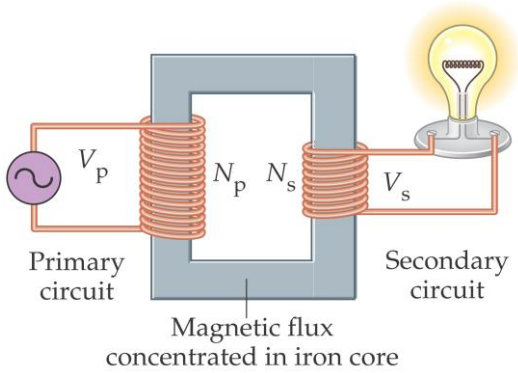

By applying Faraday's law of induction to both coils, we can come up with transformer equations:

$$\frac{V_p}{V_s} = \frac{N_p}{N_s}$$

Where V is voltage, N is number of turns, p is primary circuit, and s is secondary circuit.

The power in both circuits must be the same; therefore, if the voltage is lower, the current must be higher.

$$\frac{I_s}{I_p} = \frac{V_p}{V_s} = \frac{N_p}{N_s}$$

Activity

5.5 Practice activity

5.6 Unit summary

Unit Test

Suggested Answers to unit Activities

UNIT 6: LIGHT, OPTICS AND OPTICAL INSTRUMENTS

6.0 Introduction

What do you see in front of you? We are all able to see just because of light. You can verify this at night in a dark place; most of us would fail to see anything in the dark. Light and optical instruments enable us to see very small things, things very far away and things hidden inside other objects. In this unit we shall be discussing the elementary principles of light, optics and optical instruments.

6.1 Objectives

By the end of this unit, you should be able to:

- Explain the dual nature of light
- Calculate angles of reflection and refraction

DRAFT MODULE

- State real life examples of reflection and refraction
- Draw the ray diagram for a lens and a mirror showing the object and image
- Describe the difference between a real image and a virtual image and give an example of each

Key terms

Ensure that you understand the key term phrases used in this unit as listed below.

- Specular
- Diffuse
- Retroreflection
- Critical angle
- Lens
- Mirror
- Light ray
- Medium
- Index of refraction
- Snell's law
- Prism
- Virtual image
- Real image
- Internal reflection
- Lens Equation

DRAFT MODULE

6.2 Nature of light

There are two historical models for the nature of light. The speed of light has been measured in many ways. Reflection and refraction are the fundamental phenomena in ray (geometric) optics. Internal reflection is the basis for fiber optics

Before the beginning of the nineteenth century, light was considered to be a stream of particles. The particles were either emitted by the object being viewed or emanated from the eyes of the viewer.

Newton was the chief architect of the particle theory of light. He believed the particles left the object and stimulated the sense of sight upon entering the eyes.

Christian Huygens argued that light might be some sort of a wave motion.

Thomas Young (in 1801) provided the first clear demonstration of the wave nature of light. He showed that light rays interfere with each other. Such behavior could not be explained by particles.

Christian Huygens

He lived from 1629 to 1695. He is best known for his contributions to fields of optics and dynamics. He thought light was a type of vibratory motion. It spread out and produced the sensation of light when it hit the eye. Huygens deduced the laws of reflection and refraction. He explained double refraction

6.2.1 Wave nature of light

During the nineteenth century, other developments led to the general acceptance of the wave theory of light. Thomas Young provided evidence that light rays interfere with one another according to the principle of superposition. This behavior could not be explained by a particle theory.

Maxwell asserted that light was a form of high-frequency electromagnetic wave. Hertz confirmed Maxwell's predictions.

6.2.2 Particle nature of light

DRAFT MODULE

In the pursuit to a certain the nature of light, scientists carried out several experiments and the wave model of light could not explain some experiments. The photoelectric effect was a major phenomenon not explained by waves.

When light strikes a metal surface, electrons are sometimes ejected from the surface.

The kinetic energy of the ejected electron is independent of the frequency of the light.

Einstein (in 1905) proposed an explanation of the photoelectric effect that used the idea of quantization. The quantization model assumes that the energy of a light wave is present in particles called photons.

$E = hf$

Where h is Planck's Constant = 6.63×10^{-34} J·s and f is frequency

6.2.3 Dual Nature of light

In view of these developments, we consider light as having a dual nature. Light exhibits the characteristics of a wave in some situations and the characteristics of a particle in other situations.

Activity 1

Explain two experiments that scientists used to establish:

a. The wave nature of light (one experiment)
b. The particle nature of light (one experiment)

6.3 Reflection and Refraction

6.3.1 Reflection

A ray of light, the *incident ray*, travels in a medium. When it encounters a boundary with a second medium, part of the incident ray is reflected back into the first medium. This means it is directed backward into the first medium. For light waves traveling in three-dimensional space, the reflected light can be in directions different from the direction of the incident rays.

6.3.1.1 Specular Reflection

Specular reflection is reflection from a smooth surface. The reflected rays are parallel to each other. All reflection in this unit is assumed to be specular.

DRAFT MODULE

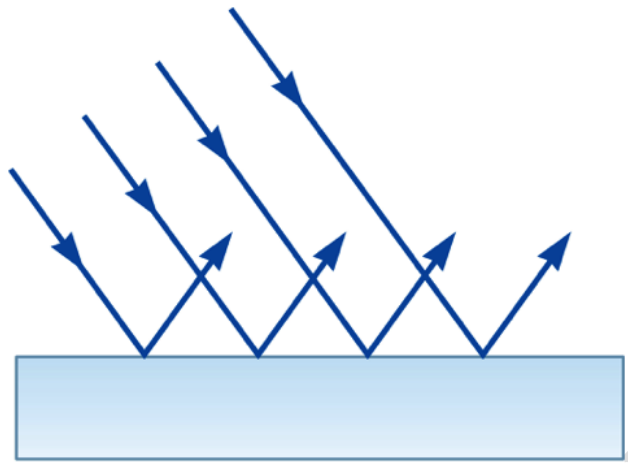

Figure 6.1: Specular Reflection

6.3.1.2 Diffuse Reflection

Diffuse reflection is reflection from a rough surface. The reflected rays travel in a variety of directions. A surface behaves as a smooth surface as long as the surface variations are much smaller than the wavelength of the light.

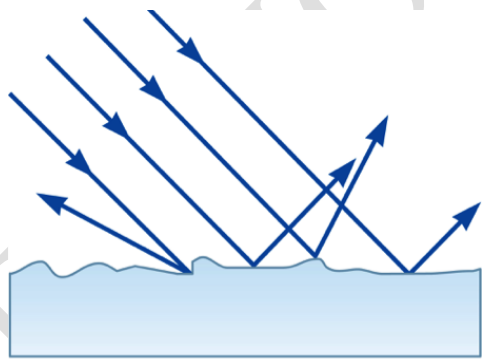

Figure 6.2: Diffuse Reflection

6.3.1.3 Law of Reflection

The law of reflection states that, ***the incident ray, the reflected ray, and the normal all lie in the same plane and the incident angle is the same as the reflected angle***.

The *normal* is a line perpendicular to the surface. It is at the point where the incident ray strikes the surface. The incident ray makes an angle of θ_1 with the normal. The reflected ray makes an angle of θ_1' with the normal.

DRAFT MODULE

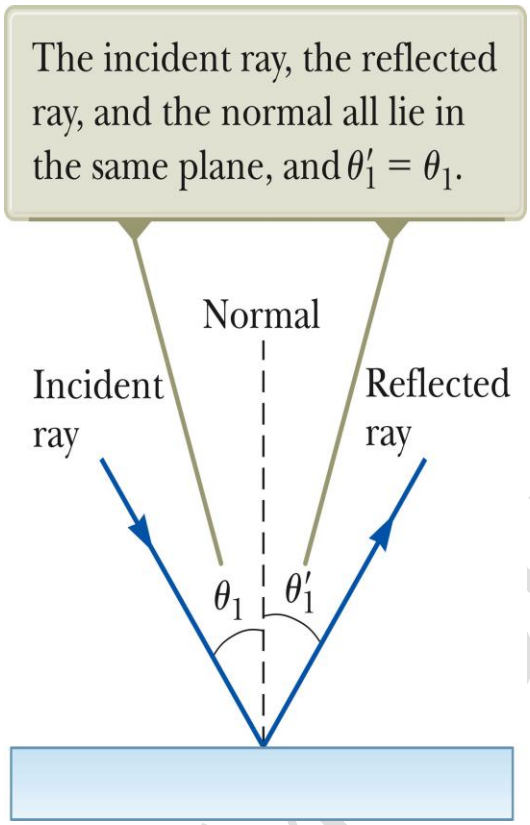

Figure 6.3: Law of Reflection

6.3.1.4 Multiple Reflections

To achieve multiple reflections we need to have more a single mirror. The incident ray strikes the first mirror. The reflected ray is directed toward the second mirror. There is a second reflection from the second mirror. This trend continues up to the last mirror depending on the number of mirrors used. Figure 6.4 shows multiple reflections.

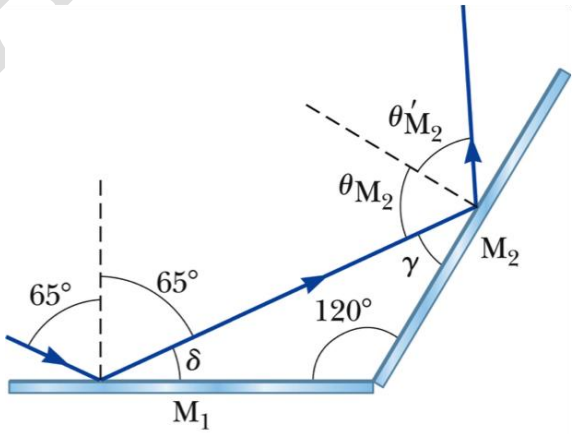

Figure 6.4: Multiple Reflections

6.3.1.5 Retroreflection

DRAFT MODULE

Assume the angle between two mirrors is 90°. The reflected beam returns to the source parallel to its original path. This phenomenon is called *retroreflection.*

Applications include: Measuring the distance to the Moon, Automobile taillights

Traffic signs

Activity 2

Find the values of $^{\theta}M_2$, $^{\theta}M_2^{'}$, γ and δ in the Figure 6.4.

6.3.2 Refraction

When a ray of light traveling through a transparent medium encounters a boundary leading into another transparent medium, part of the energy is reflected and the other part enters the second medium.

The ray that enters the second medium changes its direction of propagation at the boundary. This bending of the ray is called *refraction.*

The incident ray, the reflected ray, the refracted ray, and the normal all lie on the same plane. The angle of refraction depends upon the material and the angle of incidence.

$$\frac{\sin\theta_2}{\sin\theta_1} = \frac{v_2}{v_1}$$

v_1 is the speed of the light in the first medium and v_2 is its speed in the second.

The path of the light through the refracting surface is reversible.

For example, a ray travels from A to B.

If the ray originated at B, it would follow the line AB to reach point A.

DRAFT MODULE

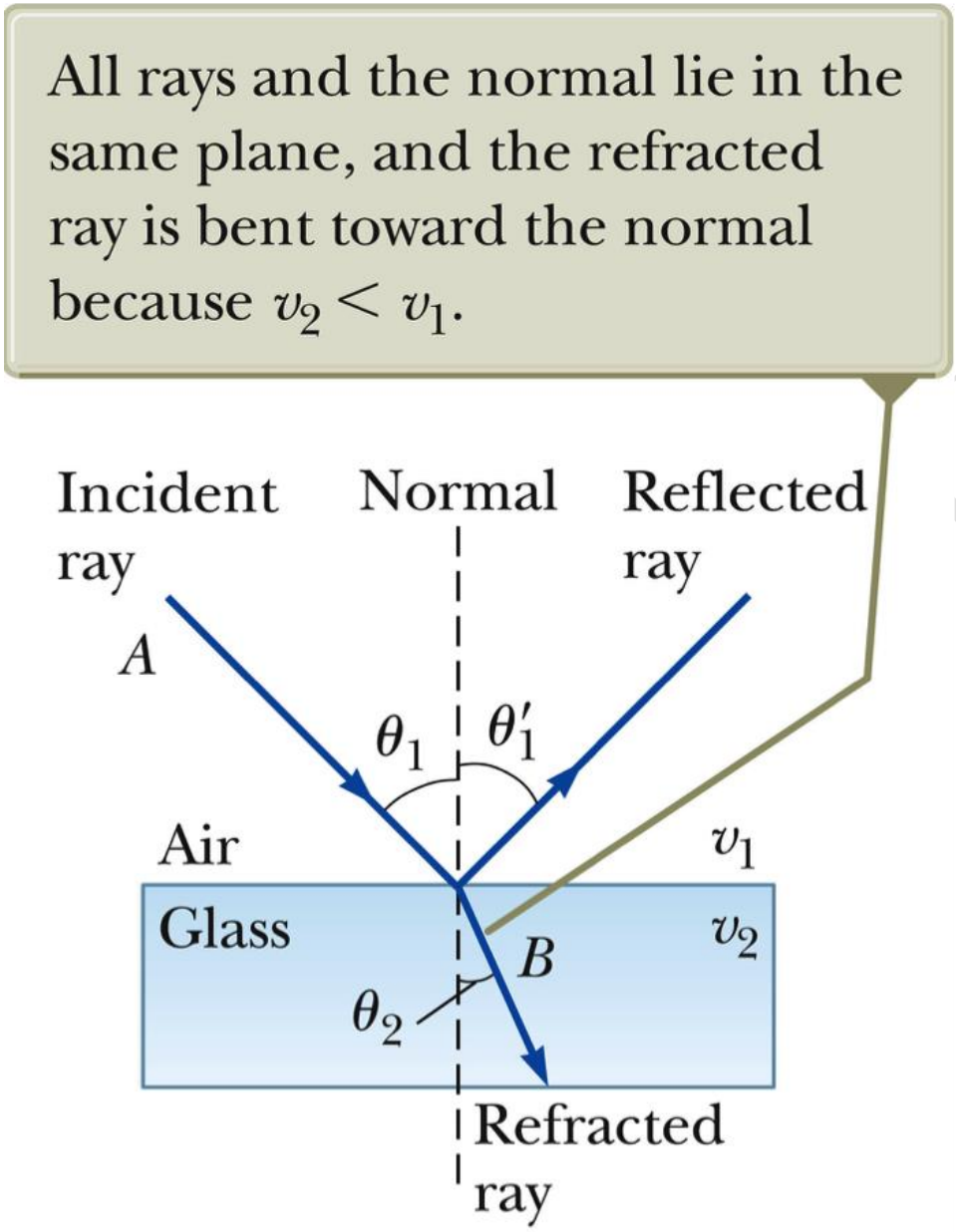

Figure 6.5: Law of refraction

Refraction $V_1 > V_2$

Light may refract into a material where its speed is lower. The angle of refraction is less than the angle of incidence. The ray bends *toward* the normal

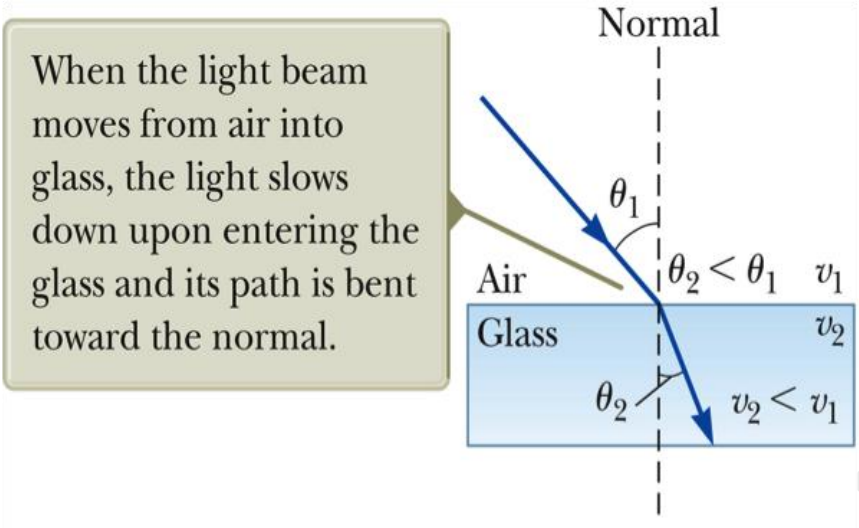

Figure 6.6: Refraction at $V_1 > V_2$

Refraction $V_2 > V_1$

Light may refract into a material where its speed is higher. The angle of refraction is greater than the angle of incidence. The ray bends *away from* the normal.

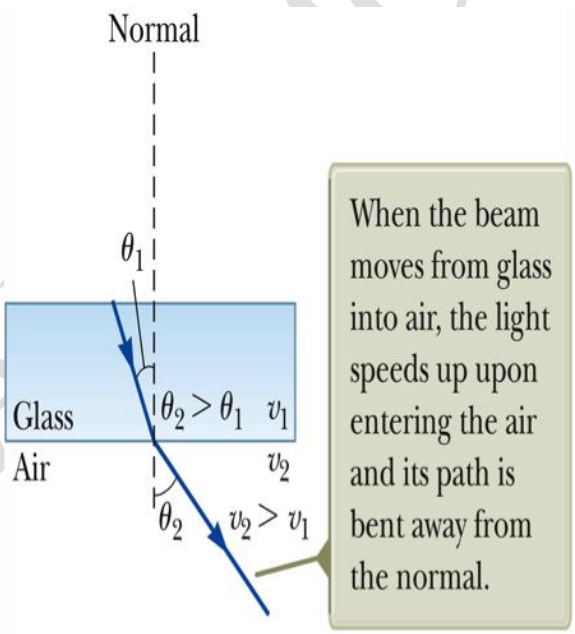

Figure 6.7: Refraction at $V_2 > V_1$

6.3.3 Light in a medium

The light enters from the left and it may encounter an electron on the way. The electron may absorb the light, oscillate, and reradiate the light. The absorption and radiation cause the average speed of the light moving through the material to decrease.

DRAFT MODULE

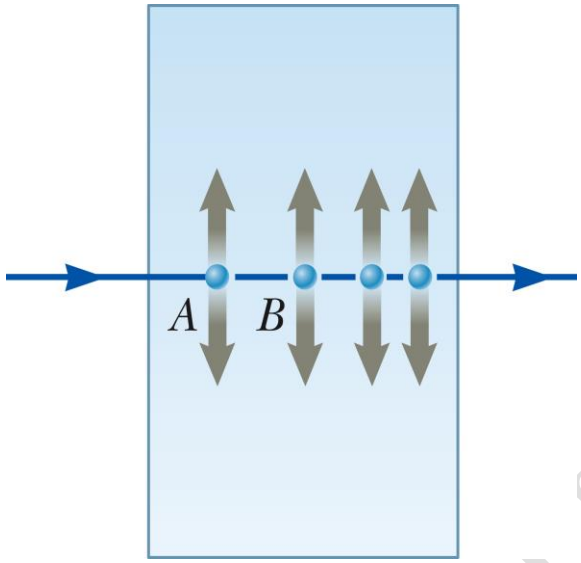

Figure 6.8: Light in a medium

6.3.4 Index of refraction

The speed of light in any material is less than its speed in vacuum.

The **index of refraction**, n, of a medium can be defined as:

$$n = \frac{\text{speed of light in a vacuum}}{\text{speed of light in a medium}} = \frac{c}{v}$$

For a vacuum, n = 1

We assume n = 1 for air also

For other media, n > 1

n is a dimensionless number greater than unity.

n is not necessarily an integer.

6.3.5 Indices of refraction

DRAFT MODULE

Substance	Index of Refraction	Substance	Index of Refraction
Solids at 20°C		*Liquids at 20°C*	
Cubic zirconia	2.20	Benzene	1.501
Diamond (C)	2.419	Carbon disulfide	1.628
Fluorite (CaF_2)	1.434	Carbon tetrachloride	1.461
Fused quartz (SiO_2)	1.458	Ethyl alcohol	1.361
Gallium phosphide	3.50	Glycerin	1.473
Glass, crown	1.52	Water	1.333
Glass, flint	1.66		
Ice (H_2O)	1.309	*Gases at 0°C, 1 atm*	
Polystyrene	1.49	Air	1.000 293
Sodium chloride (NaCl)	1.544	Carbon dioxide	1.000 45

Note: All values are for light having a wavelength of 589 nm in vacuum.

6.4 Snell's law of refraction

$$n_1 \sin \theta_1 = n_2 \sin \theta_2$$

θ_1 is the angle of incidence

θ_2 is the angle of refraction

The experimental discovery of this relationship is usually credited to Willebrord Snell and is therefore known as **Snell's law of refraction.**

Refraction is a commonplace occurrence, so identify an analysis model as a **wave under refraction.**

Activity 3.

Light travels from air into optical fiber with an index of refraction of 1.44.

a. In which direction does the light bend?
b. If the angle of incidence on the end of the fiber is 22°, what is the angle of refraction inside the fiber?

6.5 Practice activity

A light ray of wavelength 589 nm traveling through air is incident on a smooth, flat slab of crown glass at an angle of 30.0° to the normal. Find

1. The angle of refraction
2. The speed of this light once it enters the glass
3. The wavelength of this light in the glass

DRAFT MODU

6.6 Unit summary

Unit Test

Suggested Answers to Unit Activities

Activity 1

a. Superposition principle

b. Photoelectric effect

Activity 2

${}^{\theta}M_2 = 55°$, ${}^{\theta}M_2 = 55°$, $\gamma = 35°$ and $\delta = 25°$

Activity 3

a. Towards the normal

b. 15°

Practice Activity

1. 19.2°
2. 197×10^8 m/s
3. 388 nm

DRAFT MODULE

References and Bibliography

Brown, R.G. 2013. Introductory physics I: Elementary mechanics. Duke University Physics Department. Durham, North Carolina.

Bueche, F.J. 1989. *Schaum's outline of theory and problems of college physics*. 8th Edition. McGraw-Hill. New York.

Bueche, F. and E. Hecht. 2010. *Schaum's outline of theory and problems of college physics*. McGraw-Hill.

Constant F.W. 1967. *Fundamental principles of physics*. Adson- Wesley Publishing Company Incorporated.

Giacoli D.C. 1980. *Physics*. Prentice-Hall Inc. Englewood Cliffs. New Jersey.

Marion J.B. 1979. *General Physics with Bioscience Essays*. John Wiley and Sons (International Edition). New York.

McDonough J.M. 2009. Lectures in elementary fluid dynamics: Physics, Mathematics and Applications. Department of Mechanical Engineering and Mathematics, University of Kentucky, Lexington, Kentucky.

Muncester R. 1990. *A level physics*. 3rd Edition. ELBS.

Nelkon, M. and P. Parker. 1987. *Advanced Level Physics*, 6th Edition. Heinmann. London.

Nelkon, M. and P. Parker. 1995. *Advanced Level Physics*, Pearson Education.

Titcomb G.R.A. and M. Jackson (1970). *Fundamentals of engineering science*. Hutchinson.

DRAFT MODULE

Titherington D. and J.G. Rimmer. 1970. *Applied mechanics*. McGraw-Hill. London.

Todd, K.D. and L.W. Mays. 2005. *Groundwater Hydrology*. 3rd ed. Hoboken, N,J,: John Wiley and Sons.

DRAFT MODULE