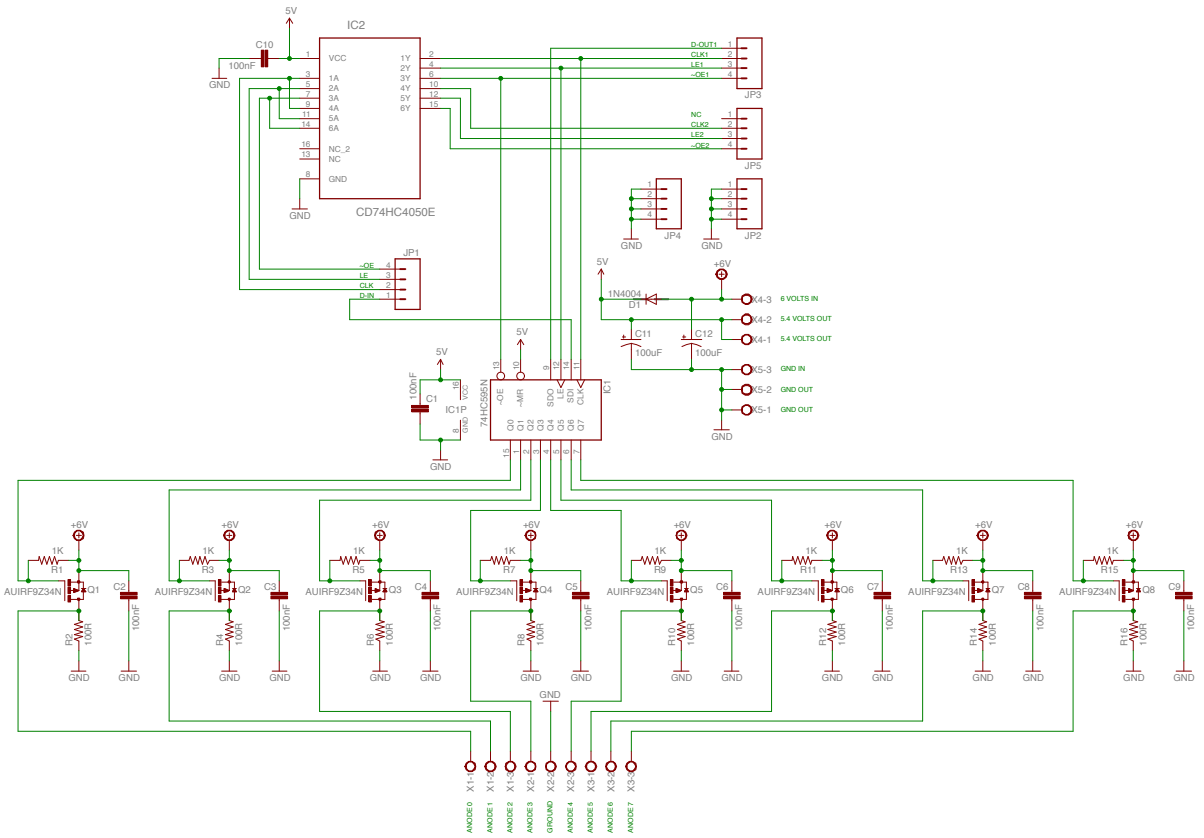

STEVE MANLEY:
3D 8x8x8 RGB LED CUBE PROJECT

TITLE: Anode driver Board

Document Number: SJM-3D-8x8x8-RGB-LED-CUBE-SCH-003

REV: 1.00

Date: 18/01/2015 18:23

Sheet: 1/1