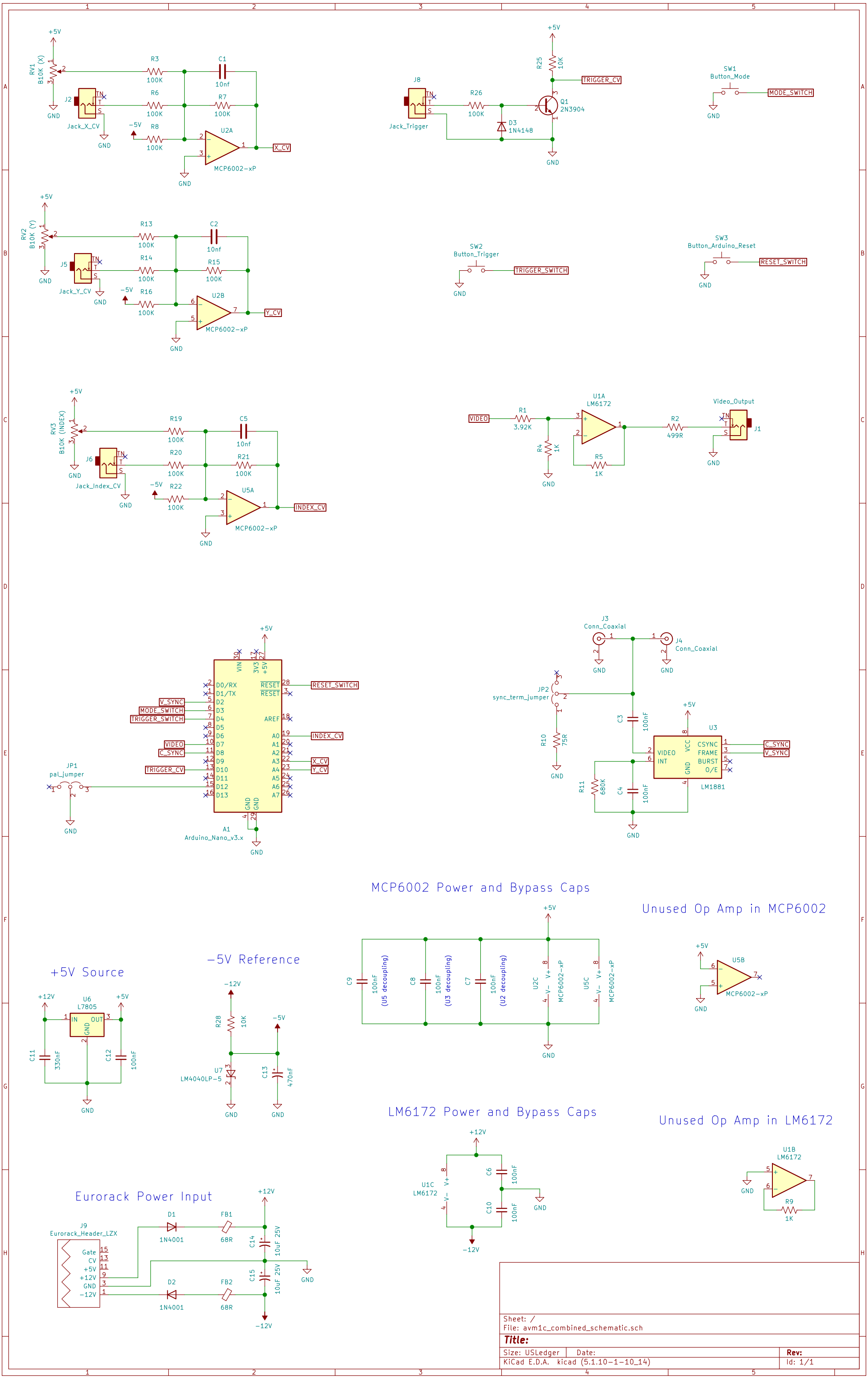

Sheet: /
File: avm1c_combined_schematic.sch

Title:

Size: USLedger | Date: | **Rev:**
KiCad E.D.A. kicad (5.1.10-1-10_14) | Id: 1/1