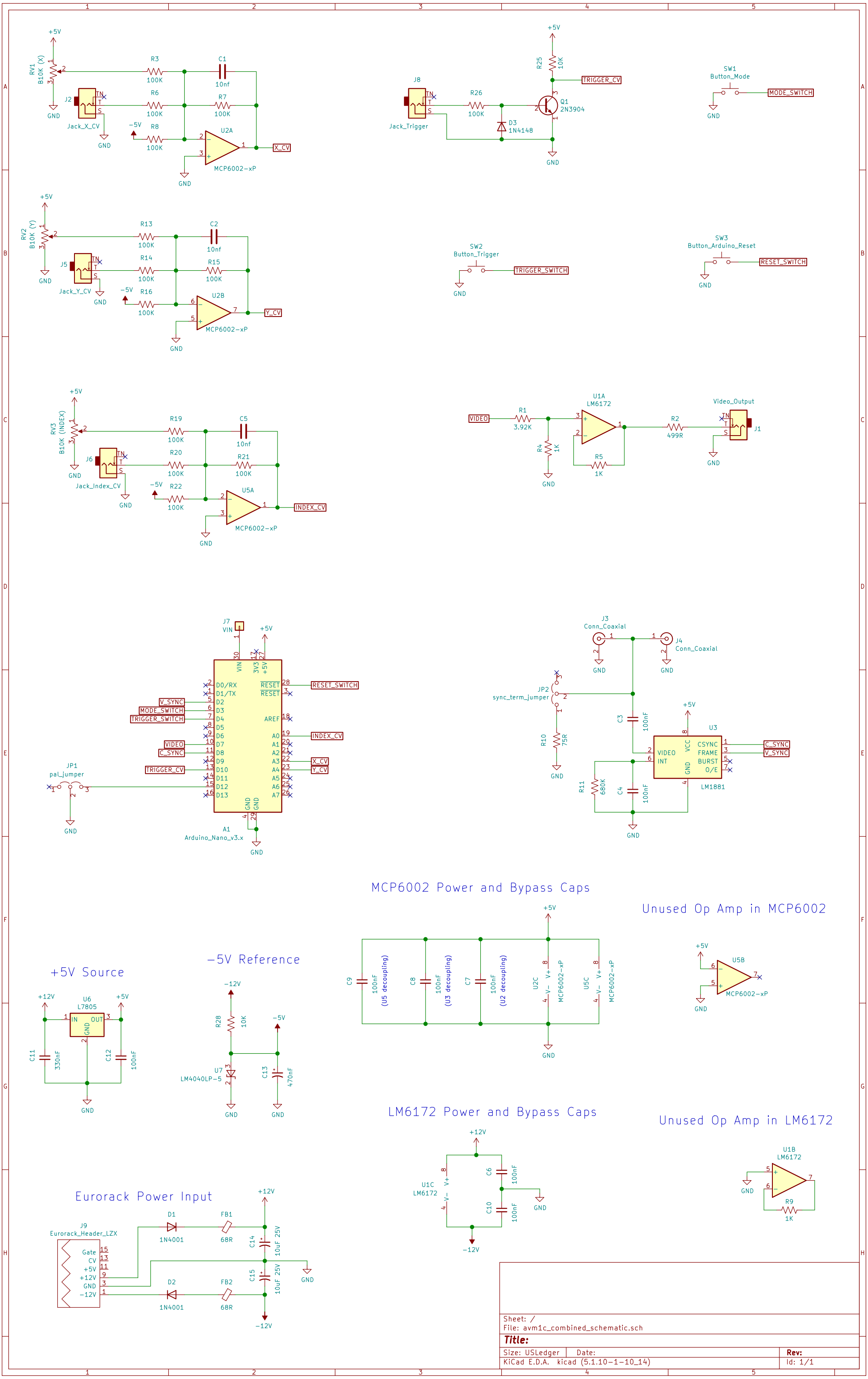

Sheet: /
File: avm1c_combined_schematic.sch

Title:

Size: USLedger	Date:	Rev:
KiCad E.D.A. kicad (5.1.10-1-10_14)		Id: 1/1