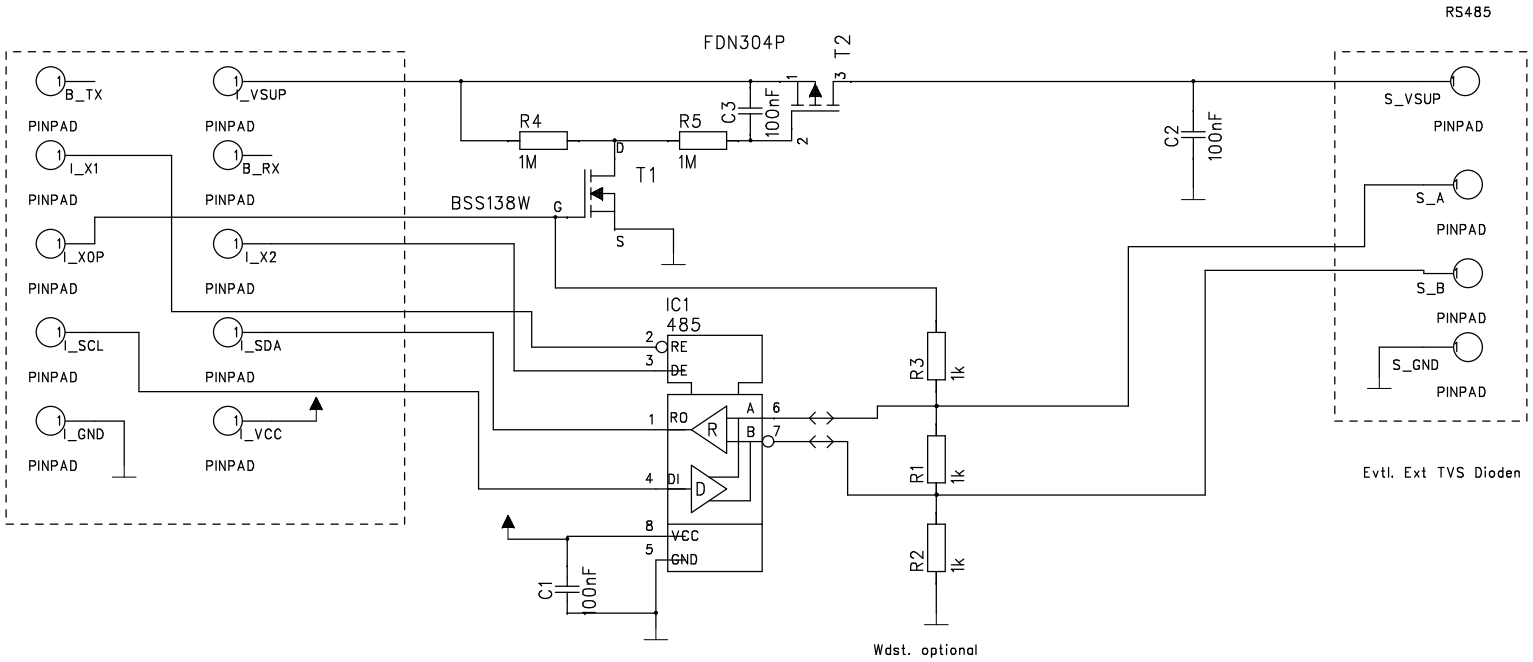

DATE:	ACTION:	(C) JoEmbedded.de
19.09.2021	0v1	.
.	.	.
.	.	.
.	.	.
.	.	.
REMARKS: (none)		PROJECT: (none)
		REF.: (none)
PAGE: 1 off 1		FILE: modbus_back_0v1.sch