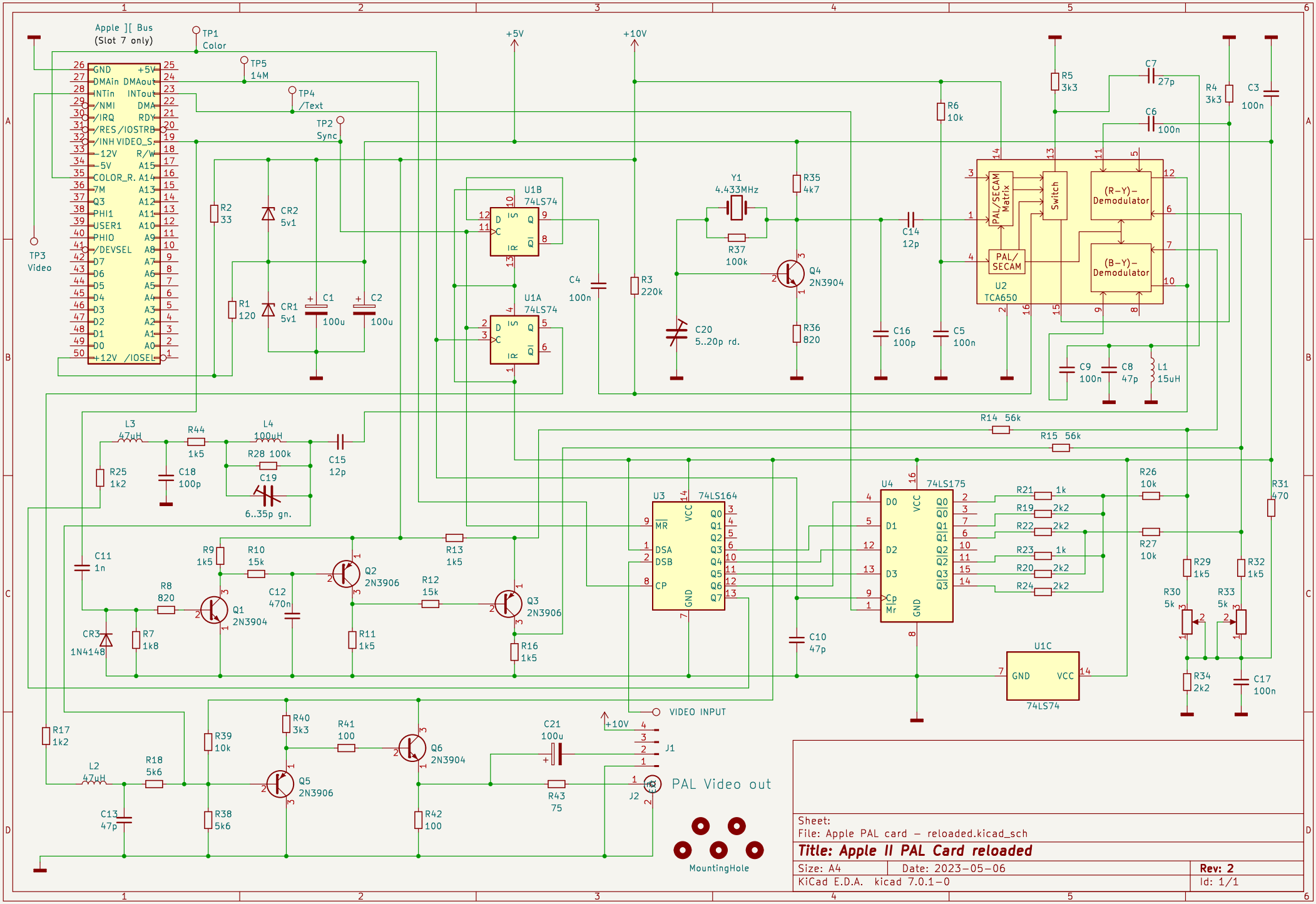

Sheet:
File: Apple PAL card – reloaded.kicad_sch

Title: Apple II PAL Card reloaded

Size: A4	Date: 2023-05-06	Rev: 2
KiCad E.D.A. kicad 7.0.1-0		Id: 1/1