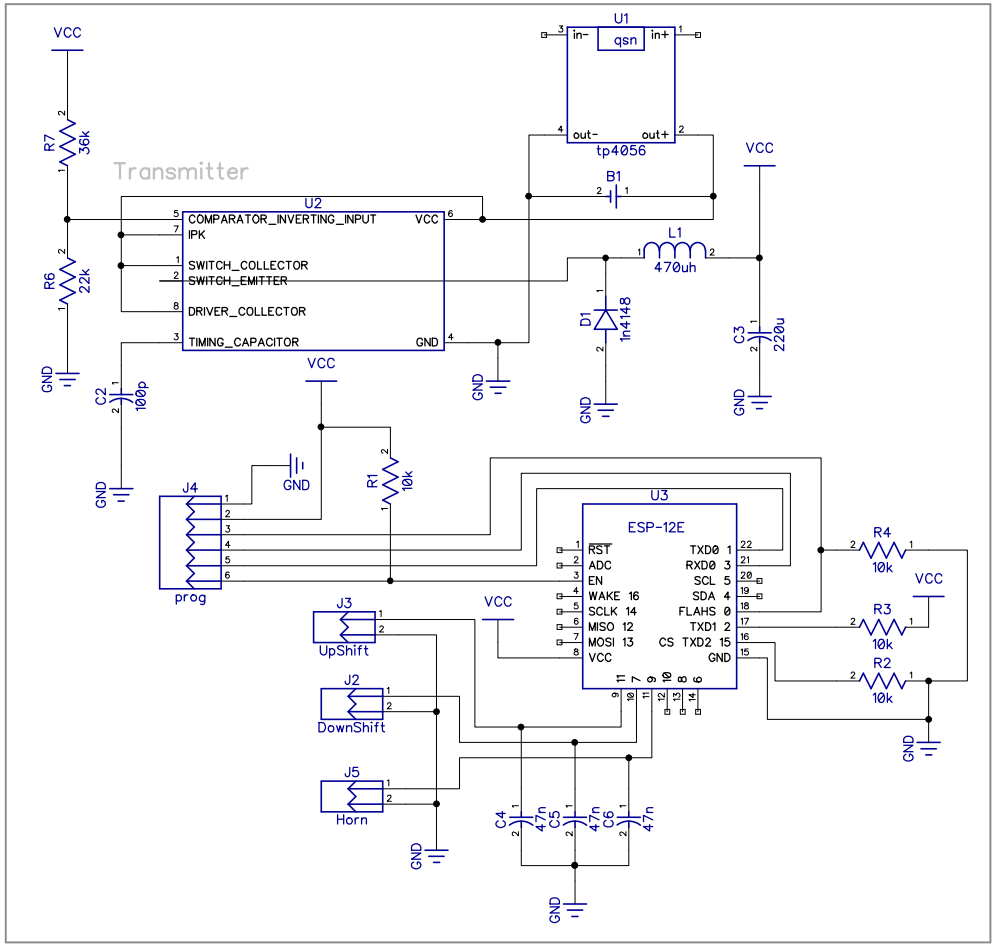

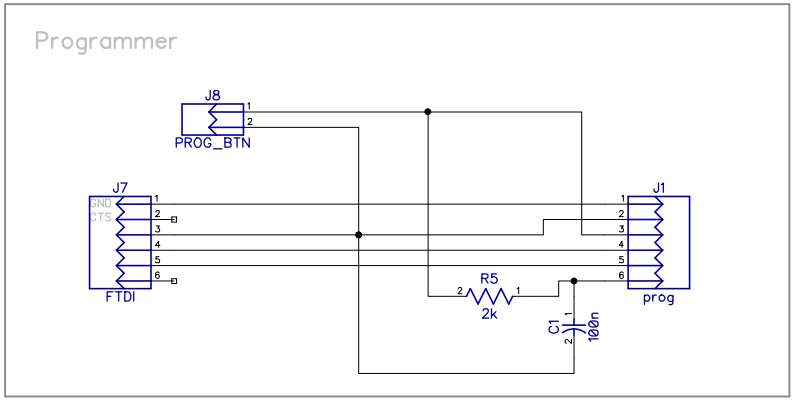

Design:	Wireless Steering Wheel paddles
Engineer(s):	Joesphan Lu
Revision:	1.0
Release Date:	9/26/2020
Github:	https://github.com/joesphan/Wireless-shifter-pedals